REPORT No. 617

AUTO-IGNITION AND COMBUSTION OF DIESEL FUEL IN A CONSTANT-VOLUME BOMB

By Robert F. Selden

SUMMARY

The variations in ignition lag and combustion associated with changes in air temperature and density have been studied for a Diesel fuel in a constant-volume bomb. The test results have been discussed in terms of engine performance wherever comparisons could be drawn. The highest test temperature approximated that attained in a compression-ignition engine in the usual range of injection advance angles. The test air densities ranged from something less than the compression density with normal aspiration to a value corresponding to considerable boost.

The most important conclusions drawn from this investigation are: The ignition lag was essentially independent of the injected fuel quantity. Extrapolation of the curves for the fuel used shows that the lag could not be greatly decreased by exceeding the compression temperatures and densities attained in modern high-speed compression-ignition engines. In order to obtain the best combustion and thermal efficiency, it was desirable to use the longest ignition lag consistent with a permissible rate of pressure rise.

INTRODUCTION

The development of the high-speed compression-ignition engine in recent years has necessitated a more critical attitude toward the nature of the fuel employed than was required for its precursor, the low-speed oil engine. The primary reasons for this change in attitude are the necessity of a light engine structure, together with a high specific output, and the usual fuel economy requirement that the crank-angle combustion period shall not become excessively large at high engine speeds. These requirements are, in a sense, contradictory in that the attainment of a high specific output necessitates a high rate of combustion that may result in severe structural loadings, which ordinarily do not occur in the more massive low-speed engine.

In order to secure a high specific output, the fuel must be partly mixed with available air, ignited, and burned in an extremely short time. The extent to which the mixing process is completed before ignition is obviously determined, in part, by the ignition lag. It is for this reason that the ignition quality of a fuel has such an important bearing on the satisfactory utilization of a given fuel in a given engine. If the lag is too short, thorough mixing is not accomplished early enough to permit effective combustion; whereas, if the lag is too long, the rate of combustion may be objectionable. This contention is supported by results obtained with the N. A. C. A. combustion apparatus (reference 1) and with engines (references 2 and 3).

Numerous attempts have been made to investigate, with relatively simple apparatus, the influence of air density and temperature upon the ignition quality of fuels; but the test conditions, in general, differed so greatly from those in an engine that the results have little practical value (references 4 and 5). Attempts to simulate engine conditions by injecting the fuel into heated bombs have also been reported (references 6 to 11) but the ignition lags in every case were considerably greater than those permissible in high-speed engines. The results reported by Michailova and Neumann (reference 11) indicate that such an apparatus should prove satisfactory for rating Diesel fuels on the basis of their ignition quality. The employment of engines for this purpose has been reviewed in references 12 and 13.

It is the purpose of this report to present experimental results obtained with a constant-volume bomb, showing the effects of air temperature, air density, and concentration of residual gases upon the ignition lag of a fuel, together with some of the accompanying variations in combustion. Such data permit a clearer understanding of the extent and manner in which engine combustion is affected by operating conditions. Most of the tests were carried out at densities ranging from 0.59 to 1.48 pounds per cubic foot. The lower value approximates the air density in an engine (compression ratio=14) at 15° B. T. C., and the higher value that at T. C. with considerable boost. The temperature range corresponds roughly to that in the same engine between 35° and 15° B. T. C. The air-fuel ratios were, in general, above 20.

The ignition-lag data correspond to the period from the start of injection to the first evidence of a pressure increase. Some flame may exist before any appreciable change in pressure occurs (references 1 and 14); nevertheless, the lag as herein defined should be the best measure of the interval available for the mixing of fuel and air prior to the general inflammation. Hetzel

(reference 12) has employed a similarly defined lag in his investigation of methods of rating fuels in a modified C. F. R. engine.

APPARATUS AND PROCEDURE

The apparatus consisted essentially of an electrically heated stainless-steel bomb, provided with an injection system capable of delivering a single charge of fuel and with an optical-type indicator for recording pressures photographically. Figure 1 is a diagrammatic sketch of the assembled apparatus. A manually operated hydraulic pump (not shown) was employed to force the fuel through tube B′ into reservoir S. The fuel tank contained heating and cooling units that maintained the desired temperature of the circulating fuel (130° F.) at thermometer U for all save a few tests at the highest bomb temperature. The increase in temperature as the fuel passed through the injection valve was approximately 15° F.

The bomb has a maximum inside diameter of 3 inches, a length from nozzle to indicator diaphragm of about 3⅞ inches, and a measured volume of 21.7 cubic inches (356 cm³). The bomb support was arranged with guides to fix the position of the bomb with respect to the optical system. The furnace (C—C, fig. 1) is divided into two parts with the top half hinged to the lower rigid section. The inlet valve J and the exhaust valve E′ are so designed that they can be quickly opened or closed. The thermocouple P′, inserted through a lug in the side of the bomb to within ¼ inch of the inner wall, served to indicate the bomb temperature. The thermocouple F in the top, or hottest part, of the furnace and the pyrometer U′ served to control the furnace temperature and, indirectly, the bomb temperature. The large thermal lag of the bomb relative to that of the heating elements necessitated this arrangement to avoid destruction of these elements.

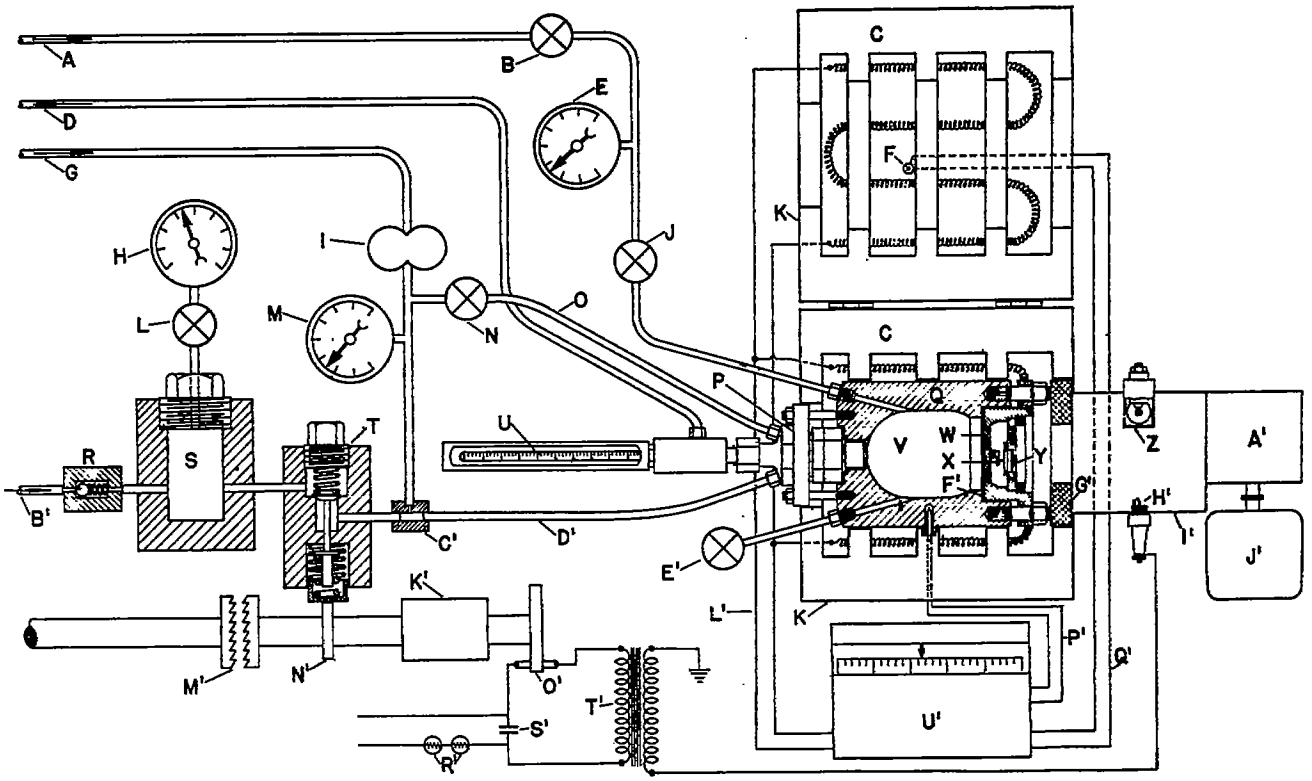

A, compressed-air line.
B, needle valve.
C, asbestos-board lagging.
D, fuel-return line.
E, air-pressure gage.
F, furnace-control thermocouple.
G, fuel-suction line.
H, high-pressure gage.
I, fuel-circulating pump.
J, quick-closing valve.
K, furnace shell.
L, valve to protect gage H.
M, fuel-pressure gage.
N, valve to adjust pressure across C′.
O, coolant-fuel line.
P, injection valve.
Q, bomb.
R, check valve.
S, high-pressure reservoir.
T, poppet-valve assembly.
U, thermometer.
V, combustion space.
W, indicator diaphragm.
X, platinized quartz mirror and staff.
Y, quartz lens.
Z, light source.
A′, film drum.
B′, hydraulic-pump discharge.
C′, 0.020-inch orifice.
D′, injection tube.
E′, exhaust valve.
F′, monel-metal gasket.
G′, asbestos board.
H′, spark.
I′, light box.
J′, motor.
K′, phase-timing gears.
L′, power line to furnace.
M′, clutch.
N′, cam.
O′, timing switch.
P′, thermocouple for bomb temperature.
Q′, leads to thermocouple F.
R′, resistance lamps in 230-volt d.-c. line.
S′, condenser, 8 microfarad.
T′, automobile spark coil.
U′, pyrometer controller.

FIGURE 1.—Diagrammatic sketch of apparatus.

A sketch of the injection valve and of an enlarged section of the nozzle is shown in figure 2. The heat flow in the neighborhood of the nozzle was minimized by placing the narrow seal (K_1, fig. 2) between the valve body and the bomb some distance back from the nozzle. Thermocouples spot-welded to the interior surface of the bomb wall showed that the cooled region was confined to the curved surface at the valve end of the bomb and that the total temperature difference

never exceeded 270° F. The valve was cooled by two fuel streams (see figs. 1 and 2): The main stream passed through tube O, then passage H_1, jacket L_1, and the four passages (two of which are indicated as I_1) to the return line B_1; the smaller stream passed through orifice C′, injection tube D′, passage G_1, and the two small holes in the valve stem to be mixed with the main stream in the return line B_1 (or D). The area of these stem holes and of orifice C′ is so much smaller than that of the nozzle orifices that a relatively small portion of the hydraulic injection impulse was dissipated at these points. The pressure in the line between pump I and orifice C′ was adjusted to 150 pounds per square inch

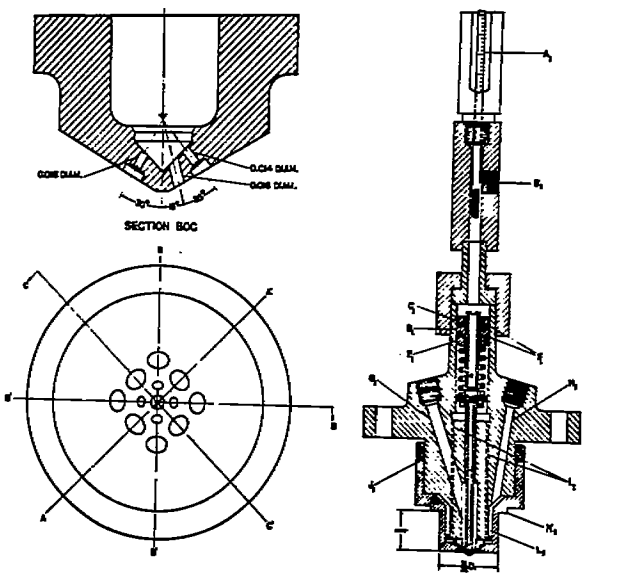

Twelve-orifice nozzle.
Plane DD′ is identical with BB′.
Plane CC′ is identical with AA′.
A_1, thermometer for fuel temperature.
B_1, connection between valve and fuel return line.
C_1, upper lock nut for stem stop.
D_1, lock-nut and stem-stop support.
E_1, nut for adjusting spring load.
F_1, lock washers.
G_1, injection passage.
H_1, passage for main coolant stream.
I_1, return passages from jacket K.
J_1, oil seal around valve body.
K_1, sealing surface.
L_1, coolant jacket around end of valve.
Injection-valve assembly.

FIGURE 2.—Injection-valve assembly and nozzle.

by means of the bypass valve N. Small readjustments of this valve were necessary for each bomb temperature. Seal J_1, which prevents fuel leakage into the furnace, consists of a number of turns of soft electric fuse wire forced tightly against the threads on the valve body by the clamping nut shown. The fact that this wire is satisfactory in spite of its low melting point is a good indication of the effectiveness of the cooling system.

The optical indicator is an adaptation of the one described in reference 15. All parts were constructed of a high-tungsten steel for which the manufacturer claims a yield point of 120,000 pounds per square inch at 1,100° F. The platinized quartz mirror proved fairly satisfactory although it gradually lost its mirror finish and reflectivity at the higher temperatures. It was necessary, therefore, to retouch certain of the prints of the original records in order to get satisfactory half-tone reproduction.

The indicator was calibrated by recording photographically the deflections corresponding to several static gas pressures over the range of interest with the indicator bolted to the hot bomb as for an explosion test. The calibration pressures were determined by a Bourdon gage, which had been checked against a dead-weight gage tester. The error involved in measuring the records is believed to be larger than any involved in the calibration procedure and, since most deflections were relatively small, the derived data may involve appreciable errors. These errors are not particularly important, however, as trends, rather than exact magnitudes, are of primary interest. Except, perhaps, for extremely high rates of pressure rise, it is believed that this indicator, in view of its high natural frequency, satisfactorily recorded the instantaneous explosion pressures. Very great rates of pressure rise, such as accompanied the larger fuel weights under conditions giving long ignition lags, invariably led to severe vibration, which loosened the mirror staff in its bearings.

The fuel employed in these tests was found by the U. S. Naval Engineering Experiment Station, Annapolis, Md., to have the following characteristics:

Diesel index		70.1
Aniline point		183.7
Specific gravity, 60/60° F		0.834
A. P. I. gravity		38.2
Flash point, closed cup	° F	242
Cloud point	° F	28
Pour point	° F	25
Color N. P. A		1.0
Saybolt Universal viscosity:		
At 32° F	seconds	87
At 100° F	do	43
Carbon residue	percent	0.01
Sulphur	do	0.04
Heat value, calorimeter gross	B. t. u. per pound	19,996

Distillation characteristics:

		° F.
First drop		526
5 cm³		531
10 cm³		532
20 cm³		538
30 cm³		546
40 cm³		553
50 cm³		562
60 cm³		572
70 cm³		584
80 cm³		599
90 cm³		627
End point		681
Recovered	percent	98.3

The cetane number was found to be 64 on the Diesel conversion of the C. F. R. engine in conjunction with the modified magnetic pick-up method recommended in reference 16. This ignition quality compares favorably with the better commercial fuels (reference 17).

During tests the pyrometer controller was set to give a furnace temperature corresponding to the desired bomb temperature, the circulating pump I (see fig. 1)

was started, and the flow of cooling water through the coils in the fuel tank was adjusted to give the requisite fuel temperature. The bomb was filled with air to the desired pressure, needle valve B being used for close control of the air flow. Fuel was then forced into reservoir S to a predetermined pressure such that the desired weight of fuel could be injected. Finally, the motor J′ was started, valve J closed to protect gage E, and the injection made by means of a "trip-hammer" mechanism

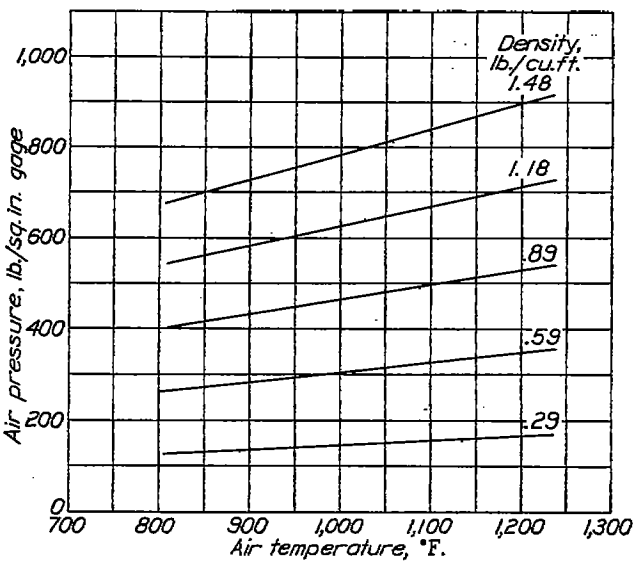

FIGURE 3.—Relations of temperature, pressure, and density.

that permitted the engagement of clutch M′ for a single revolution of the driving shaft. The motion of the trip-mechanism handle automatically closed the circuit for lamp Z for a period beginning before injection and extending beyond the combustion period. The resulting film trace shows both the initial pressure and the pressure changes resulting from combustion. This film, together with the reference trace (zero gage pressure) taken before admitting air to the bomb, constitutes the pressure record.

The engagement of the clutch M′ lifted a poppet valve T by means of cam N′, thus admitting the full pressure from reservoir S to the injection line D′. This operation also closed switch O′, producing a spark at gap H′ and a corresponding trace on the film at right angles to the constant-pressure traces. This spark served to denote the start of injection on the film record, the two having been properly phased by means of the gears K′ as described in reference 18, before the tests were begun.

The air pressures used were arbitrarily selected to give densities corresponding to 5, 10, 15, 20, 25, and 30 atmospheres absolute at 212° F. For convenience in the examination of the experimental results, the relations of temperature, density, and gage pressure are shown graphically in figure 3. Air density rather than air pressure was used as one of the primary variables because of the better correlation with spray development (reference 19) and of the better control of whatever mass-action effects there may have been in the ignition and combustion of the fuel. The air-fuel ratios were based upon the weight of air in the bomb prior to injection without considering the small amount of air compressed, as a result of combustion, into the small inlet and exhaust passages and into the space about the end of the injection valve. In any case, these ratios are not indicative of the wide range of actual air-fuel ratios from point to point in the fuel spray. The desired fuel quantities were obtained by varying the pressure in the reservoir S between 4,600 and 7,600 pounds per square inch.

RESULTS

Typical records for an air-fuel ratio of 30, reproduced in figure 4, show the effect of air temperature on the ignition lag at a density of 0.59 pound per cubic foot. Ignition-lag data taken from these and similar records for air-fuel ratios ranging from 20 to 80 are plotted in figure 5, together with data obtained at twice this density, 1.18 pounds per cubic foot.

A similar set of records (fig. 6) for an air-fuel ratio of 20 shows the effect of air density on the ignition

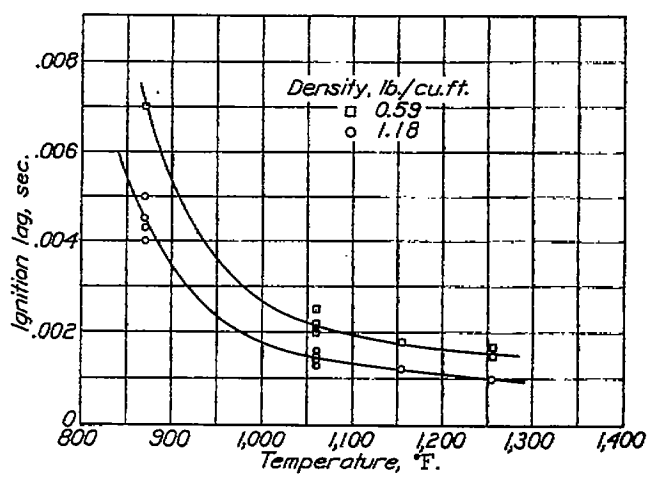

FIGURE 5.—Effect of temperature on ignition lag. Variable air-fuel ratio.

lag at the highest temperature (1,155° F.) for which the indicator was suitable for continuous service. Ignition-lag data obtained with various air-fuel ratios at this and several other gas temperatures are shown in figure 7. A summary of the data for figures 5 and 7 is given in table I.

The effectiveness of combustion (insofar as it is defined by the ratio of the pressure 0.004 second after ignition to the initial pressure) is shown as a function of the ignition lag by the solid curves of figure 8. These curves correspond to data obtained at two air densities and at several air temperatures (870°, 1,060°, 1,155°, and 1,255° F.). The 0.004-second period was arbitrarily taken as the longest in which combustion of the fuel would efficiently produce power in a moderately high-speed engine. For this reason the highest pressure indicated on the records reproduced in the

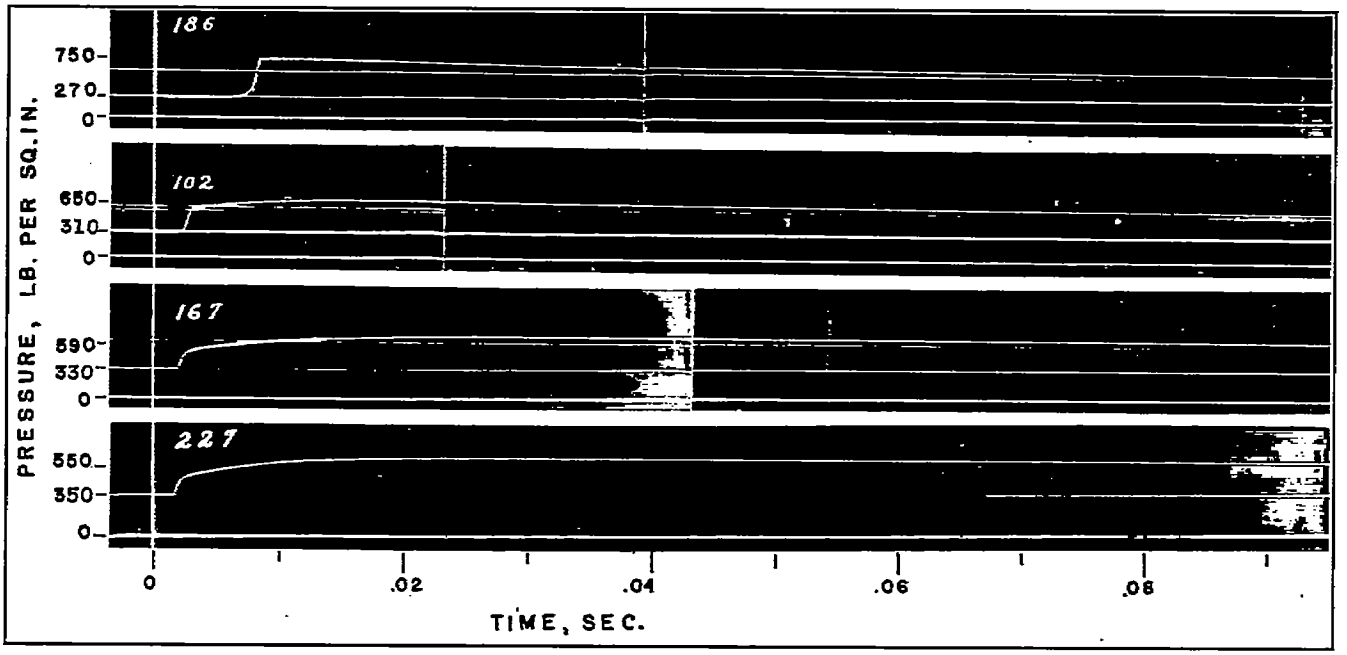

Record	Temperature (°F.)	Ignition lag (sec.)	Maximum explosion pressure (lb./sq. in.)
186	870	0.0070	750
102	1,060	.0021	680
167	1,155	.0018	690
227	1,255	.0015	640

FIGURE 4.—Effect of temperature on ignition lag. Air density, 0.59 pound per cubic foot; air-fuel ratio, 30.

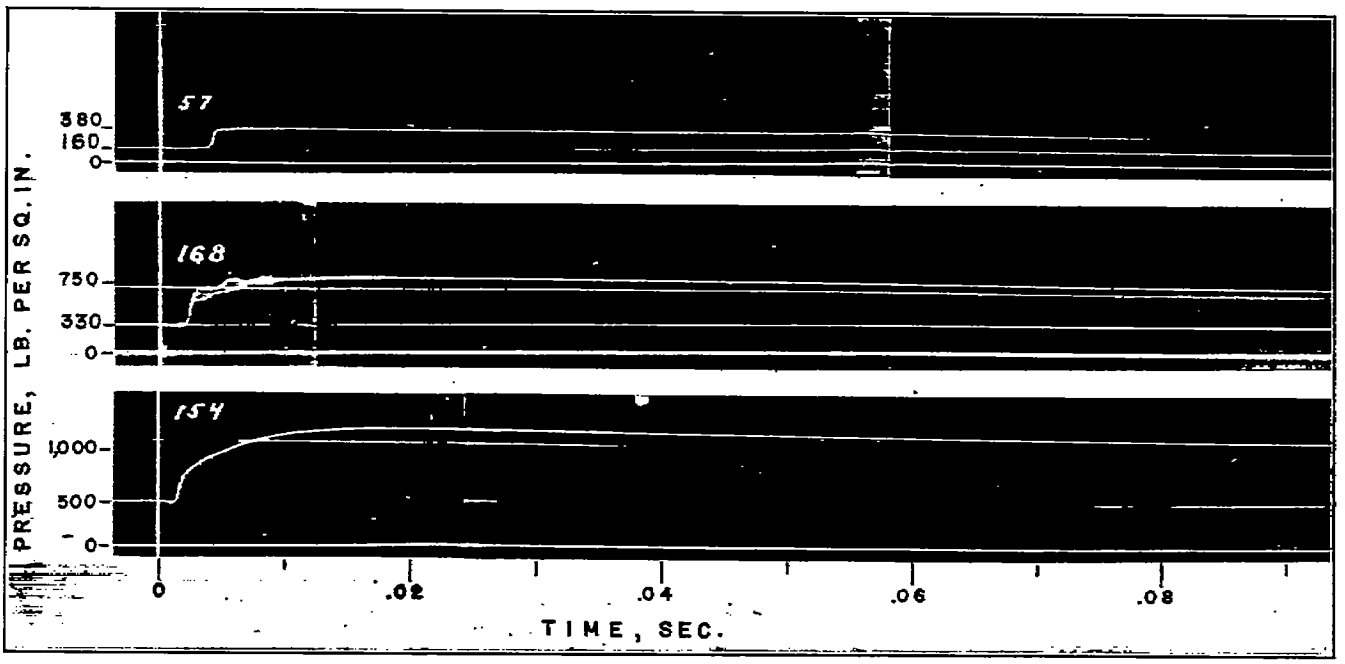

Record	Density (lb./cu. ft.)	Ignition lag (sec.)	Maximum explosion pressure (lb./sq. in.)
57	0.29	0.0036	380
168	.59	.0018	800
154	.89	.0013	1,260

FIGURE 6.—Effect of air density on ignition lag. Air temperature, 1,155° F.; air-fuel ratio, 20.

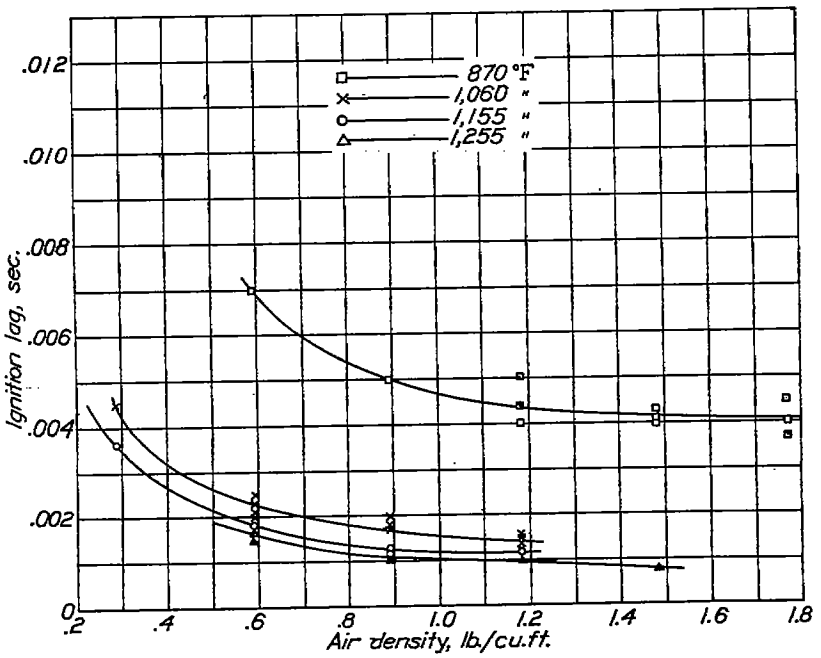

FIGURE 7.—Effect of air density on ignition lag. Variable air-fuel ratio.

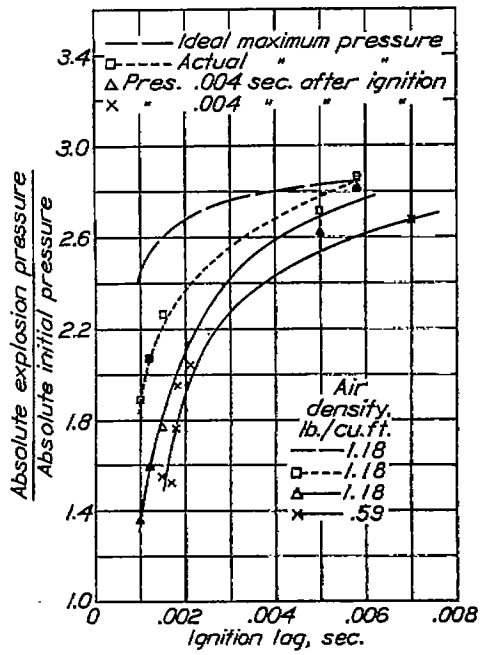

FIGURE 8.—Effect of ignition lag on combustion. Air-fuel ratio, 30.

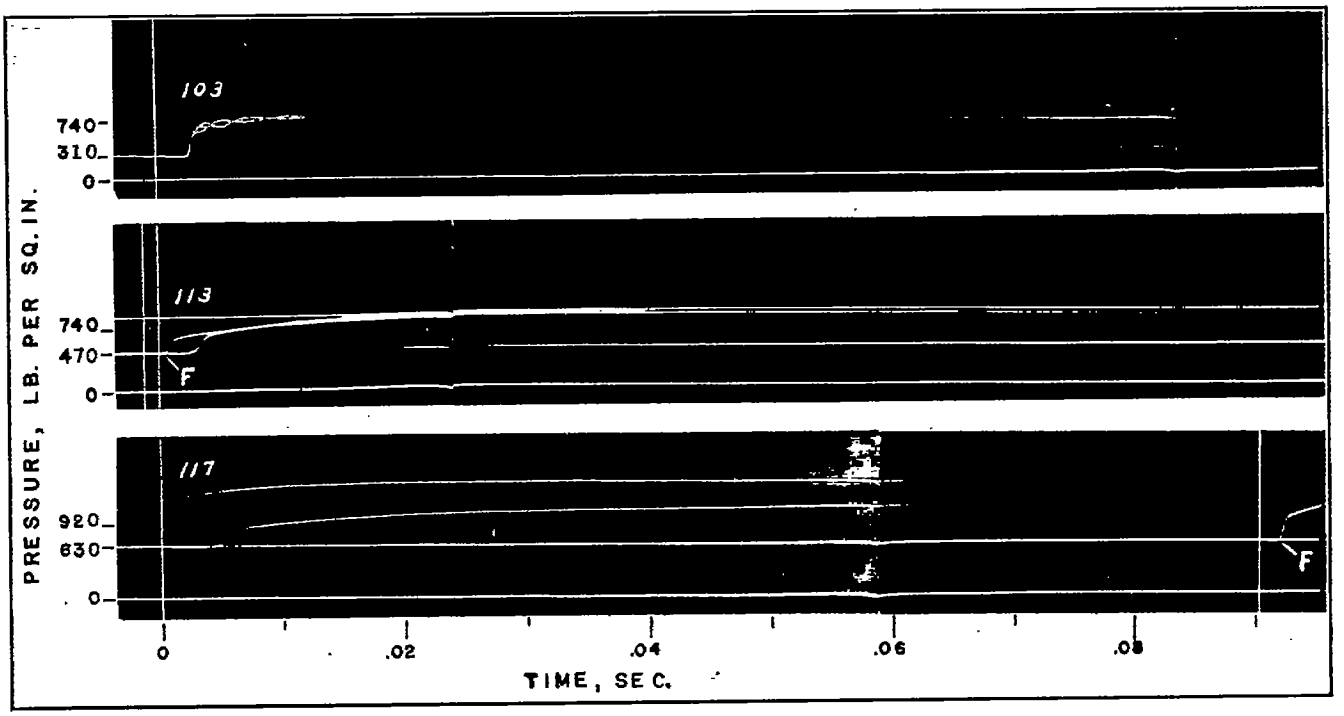

Record	Air-fuel ratio	Density (lb./cu. ft.)	Ignition lag (sec.)	Maximum explosion pressure (lb./sq. in.)
103	25	0.59 (air)	0.0023	800
113F	45	0.89 (air)	.0018	850
113	25	0.59 (air) 0.32 (products)	.0027	900
117F	30	1.18 (air)	.0017	1,440
117	25	0.59 (air) 0.63 (products)	.0047	1,140

FIGURE 9.—Effect of combustion products on ignition lag and combustion with a gas temperature of 1,060° F.

several figures corresponds to the pressure prevailing at the end of this period.

The dotted curve of figure 8 corresponds to similar ratios of the observed maximum explosion pressure to the initial pressure for the same ignition lags at the higher air density. The dashed "ideal" curve was derived from the dotted curve and indicates what the ratios of maximum to initial pressure should be for complete combustion and no appreciable heat losses. The ideal curve was obtained on the basis of two approximations: first, that the observed ratio of maximum to intial pressure of 2.84 at an ignition lag of 0.0058 second corresponded to complete combustion under the prevailing conditions with negligible heat losses; and, second, that the same temperature rise should occur at all initial temperatures. The second approximation can be valid only for a constant specific heat and an invariant chemical equilibrium. The 2.84 ratio corresponds to the lowest experimental temperature and the longest lag; hence the approximate increase in temperature resulting from this explosion was $(2.84-1)\times(870+460)$. The other values used in plotting the dashed curve were obtained by dividing the sums of this temperature increment and the individual absolute initial temperatures (corresponding to the particular ignition lags plotted in fig. 8) by the respective absolute initial temperatures. The difference between the dotted and the dashed curves at the shorter ignition lags resulted from a combination of heat losses and incomplete combustion.

Three records are reproduced in figure 9 to show the effect of the concentration of combustion products on the ignition lag and on the rate of combustion at 1,060° F., and at an air-fuel ratio of approximately 25. The gas density was different for each case. Records 113 and 117 show traces for two separate explosions, the first of which (marked F in this and later figures) served to reduce the initial oxygen concentration to a value calculated to be equivalent to that for record 103. The total gas densities were slightly greater after the preliminary explosions, owing to the weight of fuel injected to provide the combustion products. The concentration of these products before the second injection was twice as great for record 117 as for record 113. The zero of the time scale for each of the second explosions corresponds to that for record 103.

In order to show the relative influence of the specific action of the combustion products and of an inert gas on the ignition and combustion for an air-fuel ratio of 20 at 1,155° F., two groups of three records each, at effective air concentrations of 0.59 and 0.89 pound per cubic foot, respectively, are reproduced in figure 10. The uppermost record in each group (168 and 154) corresponds to a normal explosion in pure air. The center records (161 and 147) correspond to mixtures of air and nitrogen such that the air concentration was the same as in records 168 and 154, respectively, but with a total gas density roughly equivalent to the corresponding lowest record in each group. These records (156 and 142), for air plus combustion products, were obtained as outlined for figure 9. The total densities of the nitrogen-air and combustion products-air mixtures were not quite equal, owing to their method of preparation, but both were higher than for the corresponding pure-air explosions. The nitrogen mixtures were made up by admitting air to the bomb to the same respective pressures as for records 168 and 154 and then admitting enough nitrogen to bring the total pressure to the value corresponding to the next highest experimental density as computed for air, i. e., 0.89 and 1.18 pounds per square inch, respectively. This procedure neglects, of course, the small density differences between air and nitrogen. Aside from this limitation, the initial air densities for the double-injection records (156 and 142) were the same as for the nitrogen-air records.

The fact that the presence of combustion products or of excess nitrogen reduced the initial rate of pressure rise made it possible to inject a larger amount of fuel into such a mixture without damaging the indicator than was possible with an equivalent amount of pure air. The records in figure 11 are indicative of the permissible decrease in air-fuel ratio at a temperature of 1,155° F. Record 168, obtained with pure air, shows a rate of pressure rise considerably greater than either the nitrogen-air record (165) or the double-injection record (159) even though the air-fuel ratio for it was 20, whereas that for the two latter records was about 13.5. The effective air concentration, 0.59 pound per cubic foot, was the same for each record.

DISCUSSION

The present test conditions differed from conditions in a compression-ignition engine in that there was no turbulence in the air charge prior to injection and the wall temperatures were perhaps higher than in an engine. The effect of these factors upon the lag data presented herein is evidently very small in view of the fact that an extrapolation of the curves in figure 5 to the air temperatures that are probably attained before ignition in an engine indicates ignition lags of the same magnitude as those observed in an engine using the same fuel. Other investigations have led to conflicting conclusions as to the effect of turbulence on ignition lag (references 9, 20, and 21). In the case of engines this uncertainty may be caused by the difficulty of appreciably altering the degree of turbulence without simultaneously effecting changes in other influential variables.

Engine tests, as well as the present results, indicate that ignition lag is an important criterion in determining the rate and, to some extent, the effectiveness of combustion; hence the trends shown by the present results must have their counterpart in the compression-ignition engine as the intake-air pressure or temperature and

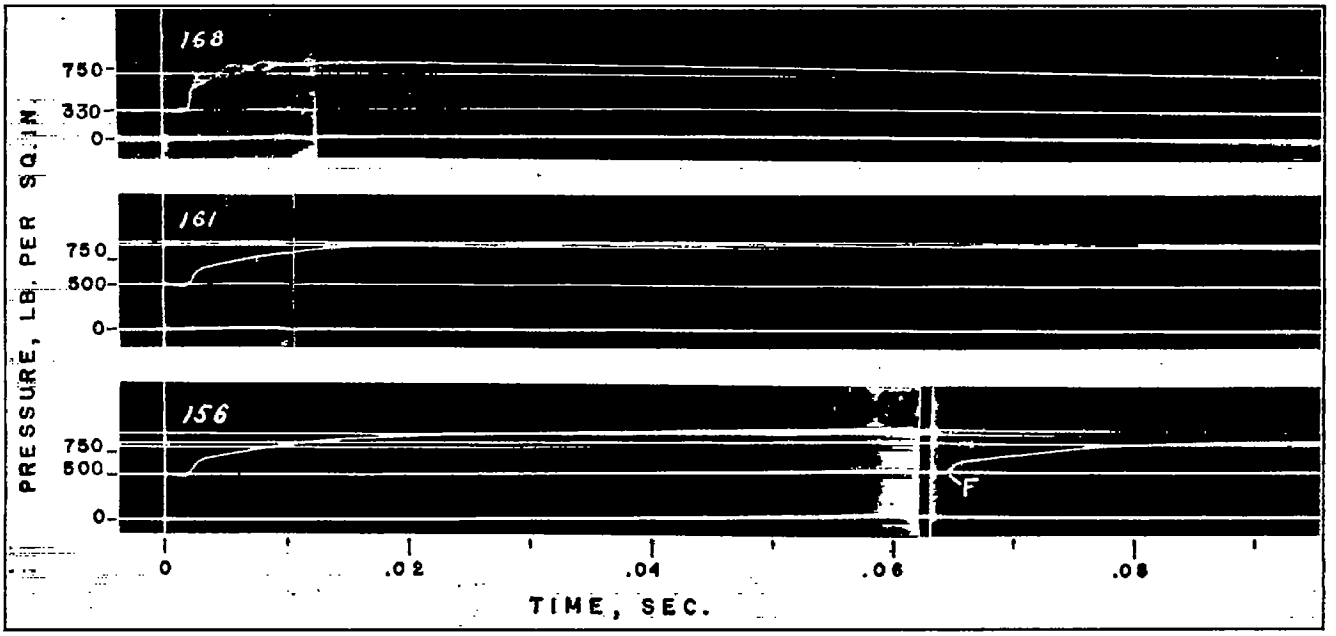

Record	Air-fuel ratio	Density (lb./cu. ft).	Ignition lag (sec.)	Maximum explosion pressure (lb./sq. in.)
168	20	0.59 (air)	0.0018	800
161	20	0.59 (air) 0.29 (nitrogen)	.0020	960
156 F	45	0.89 (air)	.0013	880
156	20	0.59 (air) 0.32 (products)	.0018	970

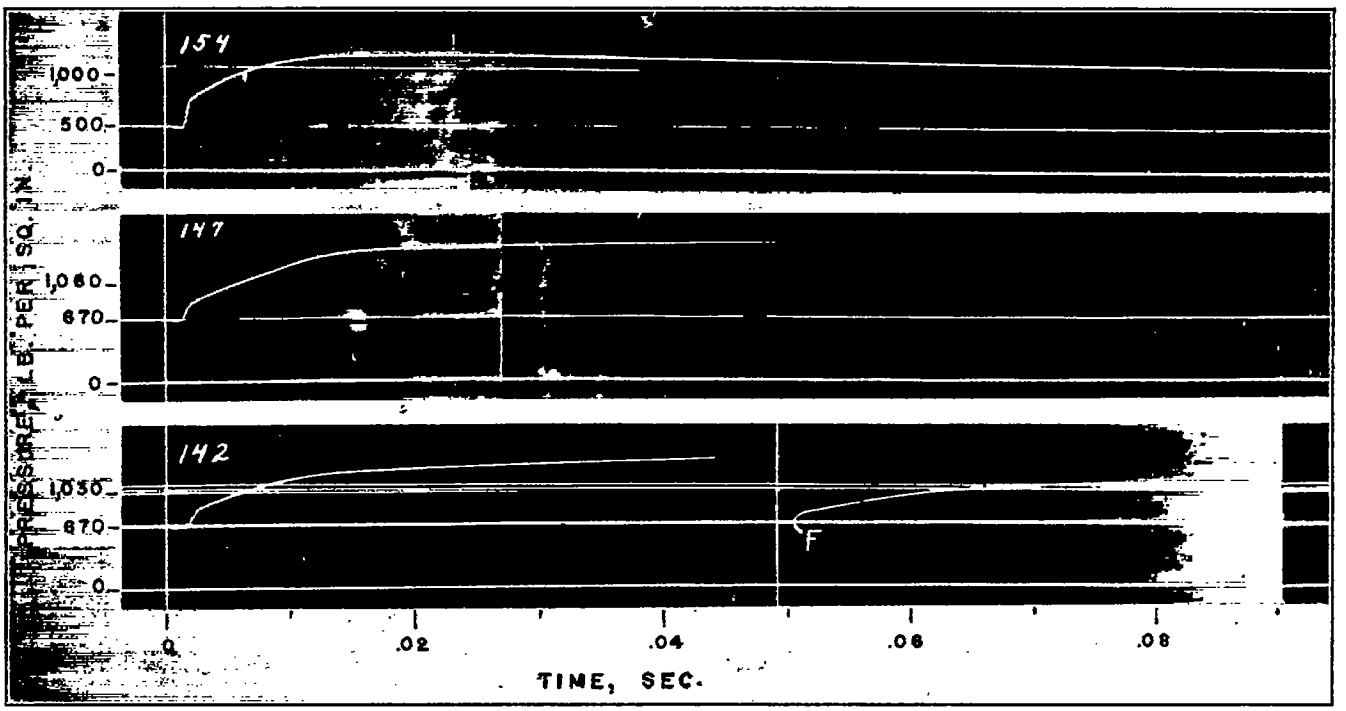

Record	Air-fuel ratio	Density (lb./cu. ft.)	Ignition lag (sec.)	Maximum explosion pressure (lb./sq. in.)
154	20	0.89 (air)	0.0013	1,200
147	20	0.89 (air) 0.28 (nitrogen)	.0014	1,480
142 F	60	1.18 (air)	.0012	1,150
142	20	0.89 (air) 0.31 (products)	.0018	1,420

FIGURE 10.—Effect of inert gases on ignition and combustion with a gas temperature of 1,155° F.

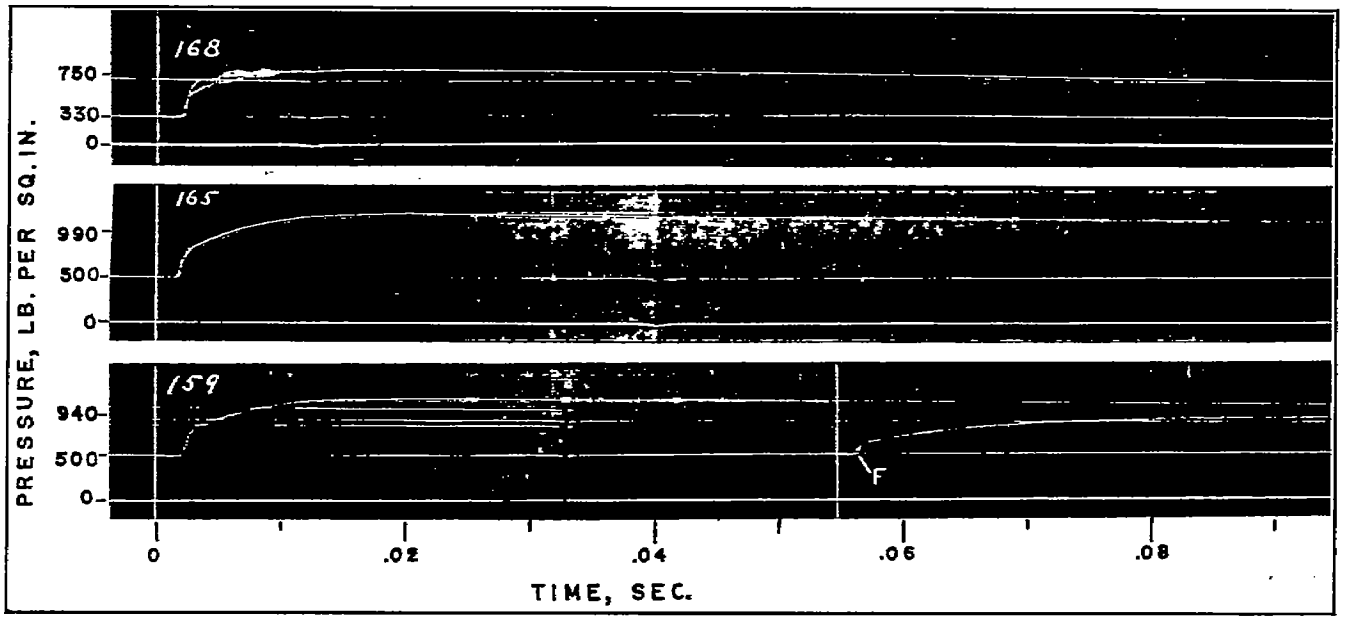

Record	Air-fuel ratio	Density (lb./cu. ft.)	Ignition lag (sec.)	Maximum explosion pressure (lb./sq. in.)
168	26	0.59 (air)	0.0018	800
165	13.3	0.59 (air) 0.29 (nitrogen)	.0017	1,220
159 F	45	0.89 (air)	.0015	880
159	13.5	0.59 (air) 0.32 (products)	.0020	1,100

FIGURE 11.—Effect of added inert gases on permissible air-fuel ratio. Air temperature, 1,155° F.; air density, 0.59 pound per cubic foot.

the compression ratio are varied. The manner and extent in which these trends are altered as the ignition quality of the fuel is changed must await further tests.

FACTORS AFFECTING THE IGNITION LAG

The ignition lag, as shown in figures 4 to 7, decreased as either the density or temperature of the gas was increased. The fact that the lags were considerably shorter for supposedly equivalent conditions than those obtained by Michailova and Neumann (reference 11) with a fuel of superior ignition quality (cetene) indicates that the range of temperatures in their bomb must have been rather wide. The air-fuel ratio appeared to have little or no influence upon the ignition lag, presumably because the optimum conditions for ignition always exist somewhere in the spray envelope. A consideration of the data in table I or a comparison of record 154 (fig. 6) with the first explosion on record 156 (fig. 10) or 159 (fig. 11) and of record 167 (fig. 4) with 168 (fig. 6) shows that the spread of the points in figure 5 must have been due to slight variations in temperature; certainly there is no correlation with air-fuel ratio. It follows from the results shown in figure 5 that the decrease in ignition lag, accompanying an increase in the compression ratio of a compression-ignition engine, is due partly to the increase in temperature and partly to the increase in air density. This conclusion confirms the results of previous engine tests, in which the intake-air temperature and pressure were independently varied (references 2, 22, and 23). The fact that some methods of rating fuels, which certainly do not simulate actual engine conditions (references 12, 13, and 16), correlate other rating methods and engine requirements reasonably well indicates that the curves in these figures would be merely shifted with very little change in shape if the ignition quality were varied. This contention is partly substantiated by the curves shown in reference 24.

The results of the present tests verify, in principal, the conclusion drawn by Michailova and Neumann (reference 11) that the ignition lag shows little tendency to decrease further at the higher temperatures and densities. (See figs. 5 and 7.) Engine tests indicated the same tendency (reference 24) but the necessary conditions varied somewhat with the fuel used. A determination in this laboratory of the air consumption and compression pressure of a motored engine having a known clearance volume indicated a gas temperature of 1,290° F. and a density of 0.87 pound per cubic foot at top center for a compression ratio of 14.6. Under operating conditions the temperature should exceed this value, owing to the heating of the air charge and to the presence of residual combustion products. Figure 7 indicates that this compression temperature might

be considerably reduced by decreasing the intake-air temperature, provided that the same air density is maintained, without exceeding an ignition lag of 0.0015 second. This indication is in agreement with engine results (reference 22). Such a lag and its associated rate of pressure rise have been found in this laboratory to be permissible in test engines.

INFLUENCE OF IGNITION LAG ON COMBUSTION

The solid curves in figure 8 show qualitatively, for two air densities, the influence of the ignition lag on the effectiveness of the combustion within a reasonable period after ignition. Rothrock and Waldron (reference 1) have observed a corresponding decrease in engine efficiency as the ignition lag was decreased below the value giving the greatest permissible rate of pressure rise. The same trend may be seen in figures 4 and 6; the shorter the lag, the greater the ensuing combustion period or the time necessary to attain maximum pressure. This tendency accounts for the approach of the upper solid curve to the dashed curve in figure 8 at long ignition lags since the heat losses were a minimum for this condition. The lower solid curve corresponds to a density approximating that in a normally aspirated compression-ignition engine during injection.

The trends in this combustion effectiveness should be indicative of similar trends in engine mean effective pressure, provided that all but a negligible portion of the combustion occurs soon after top center. Under these conditions the mean effective pressure is a function of, but not directly proportional to, the ratio of explosion to compression pressure. The fact that this ratio becomes a maximum in an engine only when appreciable combustion occurs before top center necessarily tends to nullify the advantage, in terms of mean effective pressure, accruing from a high value of this ratio; hence an intermediate ratio gives the best results in actual practice. Moreover, the expansion of the gases in an engine prevents the attainment of as high a value of maximum explosion pressure to maximum compression pressure as would occur if the same degree of combustion could be realized at top center or in a bomb. Actual engine ratios appear to be in the neighborhood of 1.5 to 1.8 (references 23 and 25) when the maximum cylinder pressures are limited to moderate values. The ratio can be increased to some extent, of course, by permitting higher cylinder pressures. The present values of the pressure ratio after 0.004 second are of this order even for the shortest ignition lags but are not strictly comparable with the engine ratios because of different conditions and air-fuel ratios. Within limits, however, these trends should be apparent in either an engine or a bomb.

To what extent the curves in figure 8 are representative of an engine possessing considerable turbulence is unknown. A qualitative comparison can be made, however, with available combustion efficiency data for a quiescent combustion-chamber engine. Thus, the ratio of a point on the upper solid curve to a corresponding point (same ignition lag) on the dashed curve is approximately proportional to the ratio of the energy derived from burned fuel in the 0.004-second interval to the total available energy, that is, to the combustion efficiency for the particular conditions. If attention is confined to lags of 0.001 and 0.0015 second, the respective ratios for the bomb are 0.55 and 0.72, which compare favorably with efficiencies ranging from 59 to 69 percent for the total combustion in a quiescent combustion-chamber engine (reference 26). The heat losses are necessarily indicated as unburned fuel in both instances. This agreement indicates that the combustion in the bomb, even for the short lags, was comparable with that in this particular engine.

The solid curves of figure 8 show that the 0.004-second pressure ratio increased as the density was increased, particularly for ignition lags acceptable in an engine. Since this ratio should be independent of density for a given air-fuel ratio, negligible heat losses, and the same percentage of fuel burned, it follows that a greater percentage of fuel burned in the designated period at the higher density. Compression-ignition engines in this laboratory have not shown a similar trend as evidenced by a constant indicated specific fuel consumption for a given air-fuel ratio and all boost pressures. (See fig. 7, reference 22.) It is possible that, in the bomb, the combination of the higher air density and larger fuel quantity merely resulted in better mixing without any chemical effect; whereas, in the engine, this effect would be minimized by air movement. On the other hand, the data presented in reference 27 for hydrogen, carbon monoxide, and methane-air mixtures indicate that the gas density does affect the burning of these homogeneous mixtures but what the effect should be for the higher hydrocarbons is unknown. Furthermore, some reduction in indicated specific fuel consumption with increasing boost has been reported for spark-ignition engines of low compression ratio (reference 28). Whether all of this reduction can be attributed to a decrease in the percentage of residuals is not known. At higher compression ratios, for which the necessary range of ignition advance angle was greater, there was first a reduction in fuel consumption and then a continuous increase with increasing intake-air density. This fact indicates that, for the high compression ratios, other factors more than offset the improvement in burning that might have been expected on the basis of the low-compression-ratio results.

EFFECT OF COMBUSTION PRODUCTS ON COMBUSTION

It has been customary in most discussions of combustion in compression-ignition engines to attribute the slow burning in the latter part of the power stroke to poor mixing of the fuel and air. This assumption is

undoubtedly true to some extent; otherwise increasing the air turbulence would not result in an improvement in engine performance such as has been obtained (reference 29). On the other hand, there is abundant evidence that the rates of some reactions are altered by their products, either by some specific action or by altering some physical factor such as the flame temperature. Slow burning in a compression-ignition engine could conceivably be attributed to the fact that portions of the unburned fuel are encompassed by mixtures of combustion products and air. It was to investigate this point that tests were conducted in which nitrogen or combustion products (of which a large fraction was also nitrogen) were mixed with air of a fixed concentration before the fuel in question was injected. The most pronounced effect of increasing the percentage of combustion products was an increase in the ignition lag together with some decrease in the maximum rate of pressure rise (fig. 9). Bird (reference 7) has reported similar results for repeated injections into the same air charge, but the comparisons were between different air concentrations for each injection. The effect of the combustion products on the ratio of the explosion to initial pressure after 0.004 second was less real than is apparent from a casual inspection of the records. Thus, even if the fuel burned in this period remained constant, a decrease in the pressure ratio was to be expected because of the necessity of heating a respectively greater mass of gas for records 113 and 117 than for record 103. For example, the ratio of the absolute pressure after 0.004 second to the absolute initial pressure for record 103 multiplied by the ratio of the initial absolute pressure for record 103 to that for record 113 gives an approximate value of the pressure ratio that should be observed for record 113. This calculated ratio happened to be identical with the observed ratio for this case, thus proving that the extent of the combustion within this interval was about the same for records 103 and 113. The observed pressure ratio for record 117 was slightly greater than the calculated ratio, which might have been due to the better mixing permitted by the much longer ignition lag.

Figure 10 shows that the addition of nitrogen or of combustion products to an air charge of fixed concentration definitely decreased the maximum rate of pressure rise. For the lower effective air density, at least, the addition of nitrogen or combustion products had less influence on the ignition lag at the higher temperature corresponding to figure 10 than is evident from figure 9. This difference may be seen by comparing records 168 and 156 with records 103 and 113, the initial concentration of combustion products being the same for records 156 and 113. At a higher effective air density (0.89 pound per cubic foot), however, a definite change in ignition lag for the air-combustion products mixture is evident. Incidentally, the presence of water vapor in Wentzel's tests (reference 10) probably accounted in part for the long lags he observed but, as the ignition quality of his fuel is unknown, no direct comparisons are possible. MacGregor (reference 30) has shown that variations in humidity affect the knocking characteristics of a fuel in spark-ignition engines.

Figure 11 illustrates the fact that, in spite of the tendency of diluent gases to reduce the maximum rate of pressure rise, very high rates could be obtained by sufficiently decreasing the air-fuel ratio. The maximum rates of pressure rise for records 168, 165, and 159 were by no means equal; nevertheless, the permissible decrease in the air-fuel ratio made possible by the addition of inert gases to air of the same effective concentration was very definite.

CONCLUSIONS

1. For fuel injection into a constant-volume bomb containing stagnant air at a temperature and a pressure approximating those in a compression-ignition engine, the ignition lag was essentially independent of the injected fuel quantity and was of the same magnitude as in the engine.

2. For the fuel used, the possible decrease in the ignition lag for a given increase in air temperature or density became quite small at temperatures and densities in excess of those generally occurring in compression-ignition engines.

3. The combustion efficiency improved as the ignition lag was lengthened; hence it should be worth while to use those fuels in an engine whose ignition lags correspond to the higher permissible rates of pressure rise. The useless "afterburning" decreased as the ignition lag was lengthened.

4. The ignition lag tended to increase and the maximum rate of pressure rise definitely decreased upon the addition of inert gases to an air charge of fixed concentration.

Langley Memorial Aeronautical Laboratory,
National Advisory Committee for Aeronautics,
Langley Field, Va., *October 5, 1937.*

REFERENCES

1. Rothrock, A. M., and Waldron, C. D.: Some Effects of Injection Advance Angle, Engine-Jacket Temperature, and Speed on Combustion in a Compression-Ignition Engine. T. R. No. 525, N. A. C. A., 1935.
2. Boerlage, G. D., and Broeze, J. J.: Ignition Quality of Diesel Fuels as Expressed in Cetene Numbers. S. A. E. Jour., vol. 31, no. 1, July 1932, pp. 283–293.
3. Good, R. F.: Cetane Numbers—Life Size. S. A. E. Jour., vol. 40, no. 6, June 1937, pp. 232–241.
4. Tausz, J., and Schulte, F.: Ignition Points and Combustion Reactions in Diesel Engines. Part I. T. M. No. 483, and Part II, T. M. No. 484, N. A. C. A., 1928.

5. Schäfer, D.: Neuere Anschauungen über motorische Entzündungs- und Verbrennungsvorgänge. Jahrbuch der Schiffbautechnischen Gesellschaft, Bd. 33, 1932, S. 181–211.
6. Bird, A. L.: Experiments on Oil Jets and Their Ignition. Proc. Inst. Mech. Engrs., 1926, vol. II (Nov.) pp. 955–995.
7. Bird, A. L.: Some Characteristics of Nozzles and Sprays for Oil Engines. Trans. Second World Power Conference, Bd. VIII, sec. 29, VDI-Verlag G. M. B. H. (Berlin), 1930, pp. 260-270.
8. Hartner-Seberich: Der Zündverzug bei flüssigen Brennstoffen. Forschungsarbeiten auf dem Gebiete des Ingenieurwesens, Heft 299, VDI-Verlag G. M. B. H. (Berlin), 1928.
9. Neumann, Kurt: Experiments on Self-Ignition of Liquid Fuels. T. M. No. 391, N. A. C. A., 1926.
10. Wentzel, Wolfram: Der Zünd- und Verbrennungsvorgang im kompressorlosen Dieselmotor. VDI-Forschungsheft 366, VDI-Verlag (Berlin), 1934, S. 14–26.
11. Michailova, M. N., and Neumann, M. B.: The Cetene Scale and the Induction Period Preceding the Spontaneous Ignition of Diesel Fuels in Bombs. T. M. No. 813, N. A. C. A., 1936.
12. Hetzel, T. B.: The Development of Diesel Fuel Testing. Eng. Exp. Sta. Bull. No. 45, Penn. State Coll., 1936.
13. MacGregor, J. R.: Diesel Fuels—Significance of Ignition Characteristics. S. A. E. Jour., vol. 38, no. 6, June 1936, pp. 217–223.
14. Rose, R. A., Wilson, G. C., and Benedict, R. R.: Photo-Electric Combustion Analysis. S. A. E. Jour., vol. 39, no. 5, Nov. 1936, pp. 459–468.
15. Tozier, Robert E.: The N. A. C. A. Optical Engine Indicator. T. N. No. 634, N. A. C. A., 1938.
16. Baxley, C. H., and Rendel, T. B.: Report of the Volunteer Group for Compression-Ignition Fuel Research. Paper presented at the May 4–9, 1937, meeting of the S. A. E., White Sulphur Springs, W. Va.
17. Geschelin, Joseph: Fuels for Diesels. Auto Ind., vol. 75, no. 4, July 25, 1936, pp. 114–116.
18. Selden, Robert F., and Spencer, Robert C.: Heat Transfer to Fuel Sprays Injected into Heated Gases. T. R. No. 580, N. A. C. A., 1937.
19. Joachim, W. F., and Beardsley, Edward G.: The Effects of Fuel and Cylinder Gas Densities on the Characteristics of Fuel Sprays for Oil Engines. T. R. No. 281, N. A. C. A., 1927.
20. LeMesurier, L. J., and Stansfield, R.: Combustion in Heavy Oil Engines. Trans. North-East Coast Institution of Engineers and Shipbuilders, England, vol. XLVIII, 1932, pp. 195–220.
21. Judge, Arthur W.: High Speed Diesel Engines. Chapman and Hall, Ltd. (London), 1935, pp. 75–77.
22. Moore, Charles S., and Collins, John H., Jr.: Compression-Ignition Engine Performance at Altitude. S. A. E. Jour., vol. 40 , no. 6, June 1937, pp. 263–272.
23. Moore, Charles S., and Collins, John H., Jr.: Compression-Ignition Engine Performance at Altitudes and at Various Air Pressures and Temperatures. T. N. No. 619, N. A. C. A., 1937.
24. Wilson, G. C., and Rose, R. A.: Behavior of High- and Low-Cetane Diesel Fuels. S. A. E. Jour., vol. 41, no. 2, Aug. 1937, pp. 343–348.
25. Moore, Charles S., and Foster, Hampton H.: Boosted Performance of a Compression-Ignition Engine with a Displacer Piston. T. N. No. 569, N. A. C. A., 1936.
26. Rothrock, A. M.: Combustion in a High-Speed Compression-Ignition Engine. T. R. No. 401, N. A. C. A., 1931.
27. Bone, William A., Newitt, Dudley M., and Townend, Donald T. A.: Gaseous Combustion at High Pressures. Longmans, Green & Co. Ltd. (London), 1929 p. 337.
28. Mucklow, G. F.: Experiments with a Supercharged Single-Cylinder Unit. R. & M. No. 1460, British A. R. C., 1932.
29. Moore, C. S., and Foster, H. H.: Performance Tests of a Single-Cylinder Compression-Ignition Engine with a Displacer Piston. T. N. No. 518, N. A. C. A., 1935.
30. MacGregor, J. R.: Influence of Humidity on Knock Ratings. S. A. E. Jour., vol. 40, no. 6, June 1937, pp. 243–249.

139778—39——12

TABLE I

IGNITION LAGS ($\times 10^{3}$) CORRESPONDING TO FIGURES 5 AND 7

[Record numbers given in parentheses]

Density (lb./cu. ft.) \ Air-fuel ratio	15	20	23	25	27	30	33	35	37	40	45	50	60	75	80	90	100	120
Bomb temperature, 870° F.																		
0.59						7.0(186)				7.0(185)								
.89		5.0(59)							5.0(184)		5.0(183)		5.0(182)					
1.18							5.0(181)			4.3(190)		4.0(189)	4.0(188)		4.0(187)			
1.48								4.1(199)	4.3(198)	4.0(197)		4.1(196)	4.1(195)	4.3(194)			4.0(193)	
1.77										4.0(206)	3.7(205)	3.7(204)	4.0(203)	3.7(202)		3.7(201)		4.0(200)
1.77										4.5(207)								
Bomb temperature, 1,060° F.																		
0.59		2.5(53)		2.8(103)		2.1(102)				2.0(101)								
.89			1.7(91)	2.0(77)		2.0(76)					2.0(75)		1.8(74)					
.89						1.7(90)					1.7(89)		1.7(88)					
1.18					1.4(70)	1.5(68)	1.5(67)			1.6(66)			1.3(65)		1.4(64)			
1.18					1.5(69)													
Bomb temperature, 1,155° F.																		
0.59	1.8(41)	1.8(40)		1.8(173)		1.8(39)				1.8(166)								
.59		1.8(43)				1.8(167)												
.59		1.8(168)																
.89		1.8(38)	1.2(37)	1.8(151)		1.8(36)					1.8(35)		1.3(148)					
.89		1.8(154)	1.8(152)	1.8(153)		1.8(150)					1.8(149)							
1.18					1.2(134)	1.2(133)				1.2(132)			1.2(131)		1.2(130)			
Bomb temperature, 1,255° F.																		
0.59						1.7(219)				1.7(226)								
.59						1.5(227)												
.89			1.0(232)			1.2(220)					1.3(230)		1.0(229)					
.89						1.2(231)												
1.18			1.0(232)			1.0(221)					1.3(230)				1.0(222)			
1.48												0.8(223)						