REPORT No. 630

A FLIGHT COMPARISON OF CONVENTIONAL AILERONS ON A RECTANGULAR WING AND OF CONVENTIONAL AND FLOATING WING-TIP AILERONS ON A TAPERED WING

By H. A. Soulé and W. Gracey

SUMMARY

Flight tests comparing the relative effectiveness of conventional ailerons of the same size on wings of rectangular and tapered plan forms were made with a Fairchild 22 airplane. Information is included comparing conventional and floating wing-tip ailerons on a tapered wing. The results showed that the conventional ailerons were somewhat more effective on the tapered than on the rectangular wing. The difference, however, was so small as to be imperceptible to the pilots. The floating wing-tip ailerons were only half as effective as the conventional ailerons and, for this reason, were considered unsatisfactory.

INTRODUCTION

At the request of the Matériel Division of the Army Air Corps, the N. A. C. A. has conducted a series of flight tests to compare the relative effectiveness of conventional ailerons of a given size on wings having rectangular and tapered plan forms. Earlier wind-tunnel tests are reported in references 1, 2, and 3. The flight tests were made with two Fairchild 22 airplanes. The two wings used in the investigation were of the same area and span. One had a rectangular plan form with semicircular tips and the other a taper ratio of 2:1. The conventional ailerons with which these wings were fitted had the same plan-form dimensions and were arranged during the flight tests to have approximately the same deflections.

The tests consisted of the determination of the effectiveness of the ailerons (1) for different degrees of deflection at two air speeds, and (2) for full deflection at various air speeds throughout the speed range of the airplane. The comparisons are based on the maximum measured rolling accelerations and velocities, the observed yawing action, and the computed rolling-moment coefficients.

In addition to being fitted with the conventional ailerons, the tapered wing was equipped with detachable wing tips that could be replaced by floating wing-tip ailerons. The floating wing-tip ailerons were also tested during the investigation and were compared with the conventional ailerons on the same wing.

AIRPLANES AND WINGS

The Fairchild 22 airplanes used in the investigation are shown in figures 1 and 2. The rectangular wing, which had the same plan form as the standard wing for the Fairchild 22 airplanes, had a span of 32 feet 10 inches, a chord of 5 feet 6 inches, an area of 171 square feet, and an N. A. C. A. $2R_112$ airfoil section. The conventional ailerons with which this wing was fitted had a span of 13 feet $3\frac{3}{16}$ inches (81 percent $b/2$) and a chord of 12 inches (18 percent c). They were

Figure 1.—Fairchild 22 airplane used for tests of conventional ailerons on a rectangular wing.

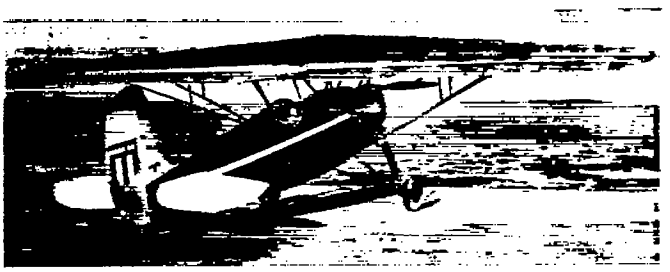

Figure 2.—Fairchild 22 airplane used for tests of conventional ailerons on a tapered wing.

operated differentially, having a maximum upward deflection of 17° and a downward deflection of 9°.

The tapered wing (figs. 2 to 5) had the same span and area as the rectangular wing. It had a 2:1 taper ratio with a straight trailing edge. The trailing edge was made straight so that the aerodynamic centers of the tapered and rectangular wings could be located at the same point relative to the fuselage while still permitting access to the rear cockpit. In external dimensions the tapered wing was comparable with an in-

ternally braced wing although it was supported externally for the tests. The airfoil section varied from an N. A. C. A. 2218 section at the root to an N. A. C. A. 2209 section at 15 feet from the axis of symmetry. The

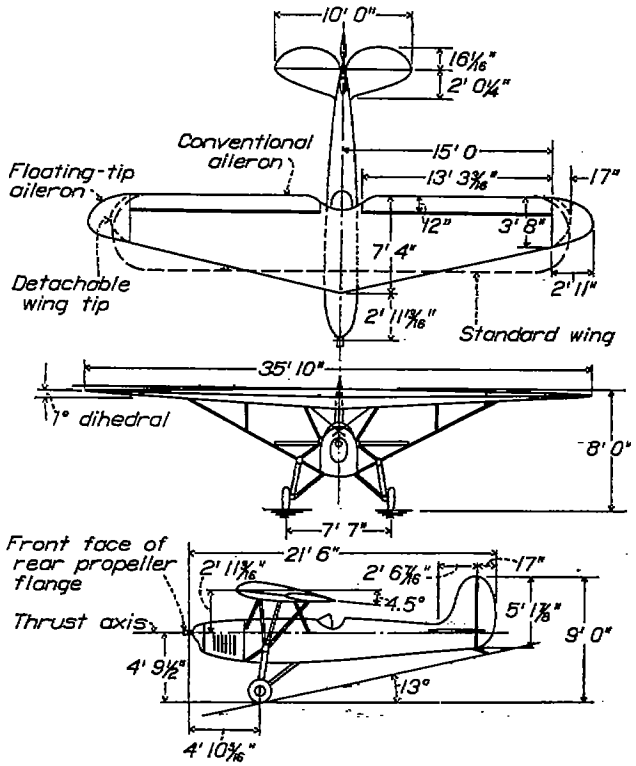

FIGURE 3.—Three-view drawing showing the installation of the tapered wing on a Fairchild 22 airplane.

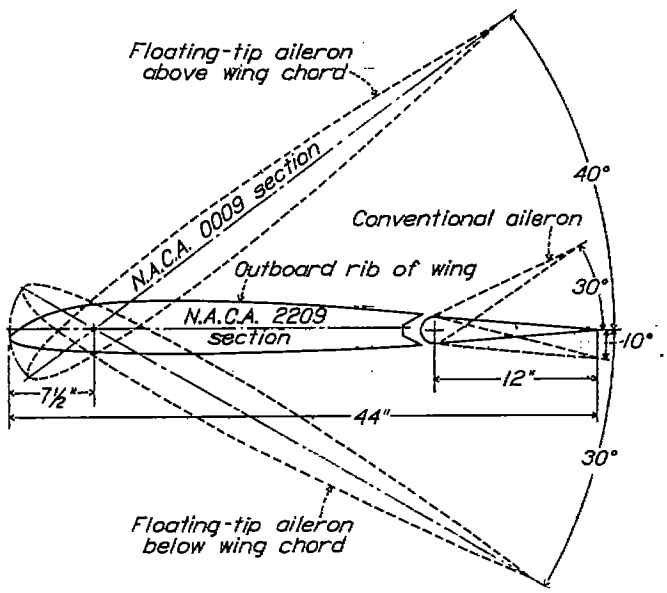

FIGURE 4.—Section through tapered wing at outboard end of conventional aileron.

wing tips were rounded. The chord varied from 7 feet 4 inches at the root to 3 feet 8 inches at the 15-foot station.

The conventional ailerons on this wing had the same span and chord and were located in the same position relative to the wing span as were the conventional ailerons on the rectangular wing. They were operated differentially and, for the tests, were limited so that the maximum upward deflection was 18° and the downward deflection 9°. Owing to differences in the aileron-operating mechanism, the maximum aileron deflections on the tapered wing were obtained with a stick deflection of 14°; whereas, with the rectangular wing, the maximum deflections were obtained with a stick deflection of 20°. The plan view in figure 3, on which the rectangular wing has been drawn in outline, gives a direct comparison of the wings and the conventional-aileron installation.

(a) Installation of fixed wing tip.

(b) Installation of floating wing-tip aileron.

FIGURE 5.—View of right wing.

For the installation of the floating wing-tip ailerons, the fixed tips of the tapered wing outboard of the 15-foot station were removed and the conventional ailerons were locked in their neutral position. The floating wing-tip ailerons had a symmetrical N. A. C. A. 0009 airfoil section at the root. Each aileron had an area of 7.9 square feet and a span of 35 inches; the wing area and the span with these ailerons were 177 square feet and 35 feet 10 inches, respectively. These ailerons were statically balanced about a hinge axis 17 percent back of their leading edges and were permitted to float freely between limiting positions of 40° up and 30° down. The ailerons could be deflected relative to one another to obtain a maximum angular difference of 30° with a stick movement of 24°.

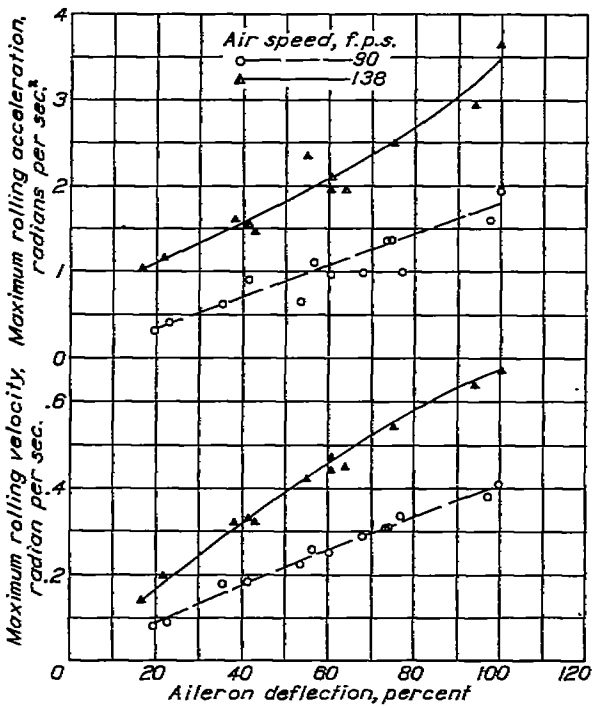

FIGURE 6.—Variation of the maximum rolling velocities and accelerations with deflection of conventional ailerons on the rectangular wing.

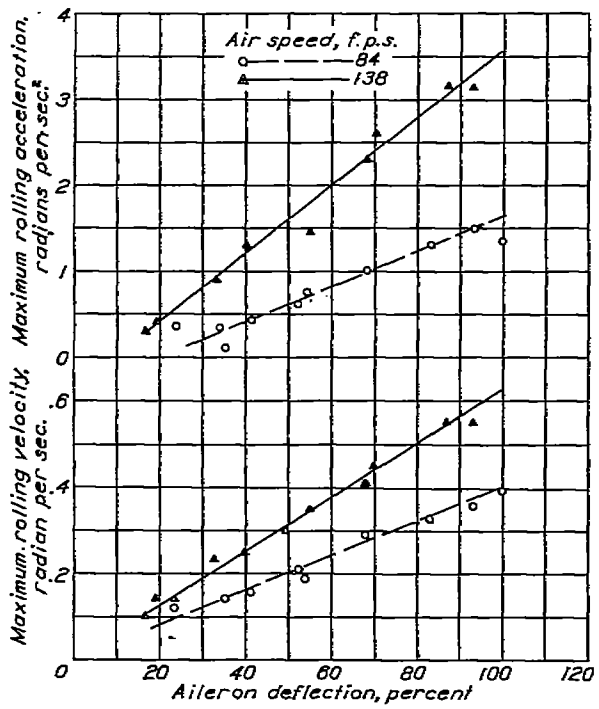

FIGURE 7.—Variation of the maximum rolling velocities and accelerations with deflection of conventional ailerons on the tapered wing.

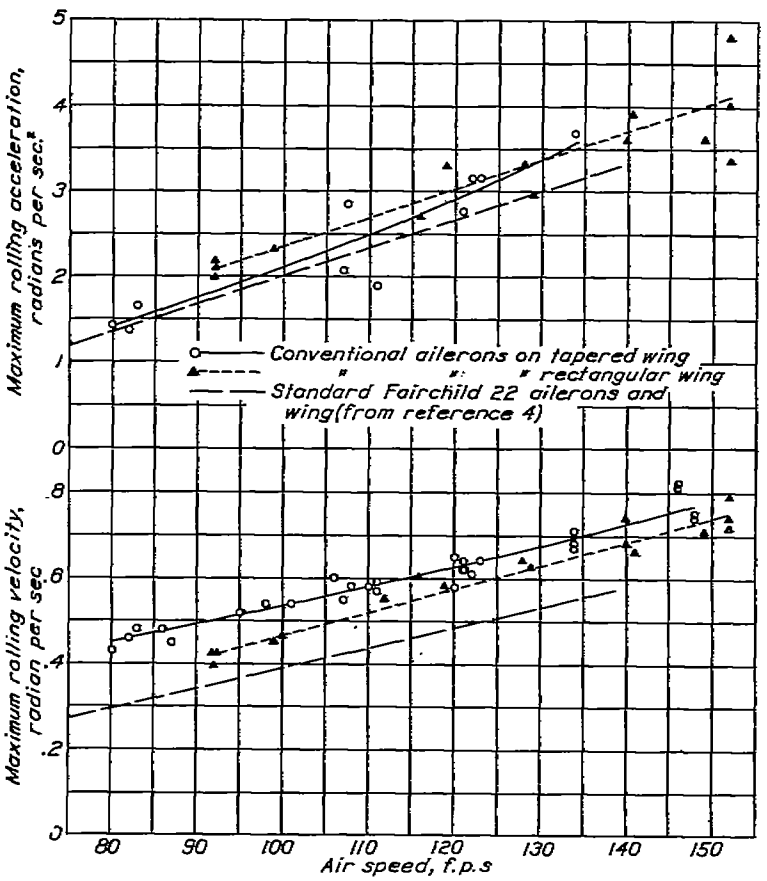

FIGURE 8.—Comparison of the maximum rolling velocities and accelerations with full deflection of conventional ailerons on the rectangular and the tapered wings.

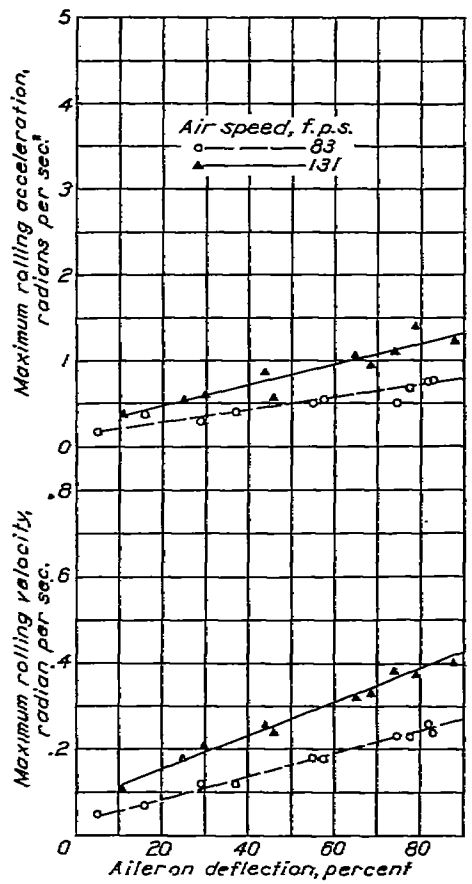

FIGURE 9.—Variation of the maximum rolling velocities and accelerations with deflection of floating wing-tip ailerons on the tapered wing.

TESTS AND RESULTS

With each of the lateral-control systems, two series of tests were made. In one series, the ailerons were abruptly moved to their maximum deflections during steady flight at various speeds throughout the flight range. In the other series, the amount the ailerons were moved was varied at each of two air speeds, one in the high-speed and the other in the low-speed range. Each series of tests was made in gliding flight for only right deflections of the stick. Records were made of

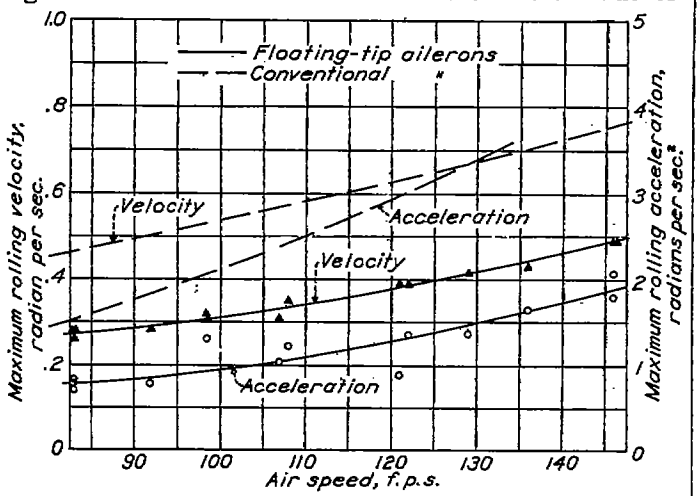

FIGURE 10.—Comparison of the maximum rolling velocities and accelerations with full deflection of the conventional and floating wing-tip ailerons on the tapered wing.

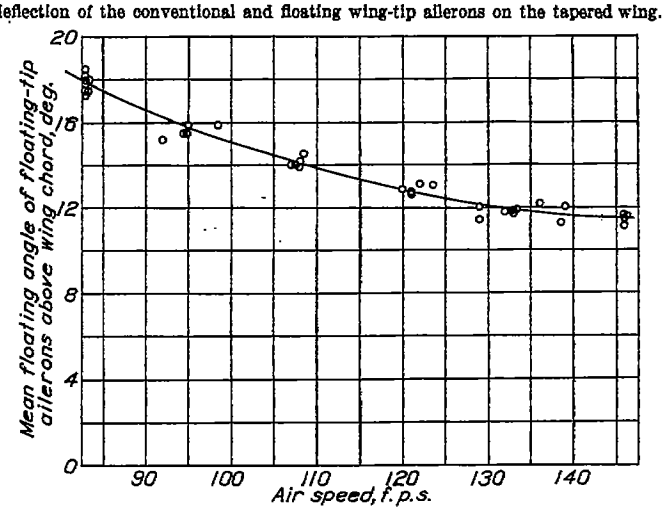

FIGURE 11.—Variation of the mean floating angle of the wing-tip ailerons with speed.

the initial air speed, the amount the ailerons were moved, and the angular velocities of the airplane in rolling and yawing. These measurements were supplemented by pilots' observations of the control action and control force.

The records were inspected for any lag or sluggishness in the response of the airplane to the aileron movement and for the direction of the initial yawing velocity. From the records of the rolling velocity, the maximum rate of roll resulting from a given aileron movement was directly obtained. The maximum angular accelerations in roll were obtained by differentiation of the rolling-velocity records.

The results of the measurements are presented in figures 6 to 12. Figures 6 and 7 show the results of the partial-deflection tests of the conventional ailerons on the rectangular and tapered wings. The aileron-deflection scales of these figures are based on the differences between the angles of the up and down ailerons. For the three aileron systems tested in the investigation, the aileron deflections were approximately proportional to the deflections of the control stick. Figure 8 compares the rolling effectiveness for full deflection

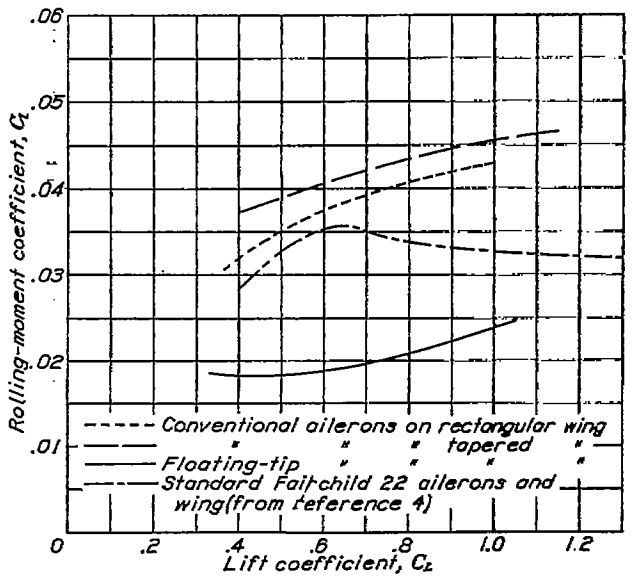

FIGURE 12.—Comparison of the rolling-moment coefficients of the lateral-control systems tested.

of the ailerons on the two wings. Also shown in this figure are the results of tests of the standard wing for the Fairchild 22 airplane. These results were used as a basis for comparison of the different types of lateral controls treated in reference 4. Data similar to those given in figures 6 and 8 for the conventional ailerons are given in figures 9 and 10 for the floating wing-tip ailerons. The mean floating angles of the wing-tip ailerons at various speeds in steady flight are shown in figure 11.

Figure 12 has been prepared to compare the lateral-control systems on the basis of the rolling-moment coefficients. The method of computation used in the preparation of this figure involves a correction of the measured acceleration to zero rate of roll so that the computed coefficients are comparable with those obtained from wind-tunnel tests. (See reference 4 for details of method.) The moments of inertia of the airplanes about the X body axes were required for the computations. The moment of inertia of the airplane with the rectangular wing was 707 slug-feet²; that for the airplane with the tapered wing was 766 slug-feet² as flown for tests of the conventional ailerons and 1,018 slug-feet² as flown for the tests of the floating wing-tip ailerons.

DISCUSSION

COMPARISON OF CONVENTIONAL AILERONS ON RECTANGULAR AND TAPERED WINGS

The rolling effectiveness of the conventional ailerons on the rectangular and the tapered wings may be compared on the basis of the information given in figures 8 and 12. Figure 8 shows that the maximum rolling accelerations given by the ailerons on the two wings were approximately the same. The maximum rolling velocities attained were slightly greater with the tapered than with the rectangular wing. The difference in the rolling velocities was of a magnitude sufficient to make a difference of 2° to 3° out of approximately 25° in the angle of bank attained in 1 second after the control movement. This difference was not discernible to the pilots making the tests, who reported that the rolling effectiveness was equally good with either wing.

The rolling-moment coefficients given in figure 12 also showed that the conventional ailerons, when installed on the tapered wing, are somewhat superior to the same ailerons when installed on the rectangular wing. The improvement varied slightly with lift coefficient and was of the order of 5 percent at the higher lift coefficients, where normally the greatest difficulty is met in obtaining adequate control. This result is in agreement with the wind-tunnel tests of reference 1 and was indicated by an analysis of the two aileron installations made in accordance with the procedure given in reference 3.

With both wings, the ailerons showed a normal variation of effectiveness with control deflection (figs. 6 and 7). No lag or sluggishness was noted in the response of the airplanes to control movements. The yawing action with both wings was small and adverse and was slightly greater with the tapered than with the rectangular wing. This result is at variance with the wind-tunnel tests of reference 1 and with the theoretical treatment of reference 3, both of which indicate that the tapered wing should have the smaller yawing action. No analysis was made regarding this discrepancy because the yawing action was relatively small with either wing. No comparison was made of the control forces with the two different wings because of the difference in the mechanical advantage for the two control systems. From the fact that the stick travel for the tapered wing was only two-thirds that for the rectangular wing, it was expected that the control force for the tapered wing would be of the order of one and one-half times that for the rectangular wing. The pilots' reports were in agreement with this rough analysis.

COMPARISON OF CONVENTIONAL AND FLOATING WING-TIP AILERONS ON THE TAPERED WING

A comparison of the rolling effectiveness of the conventional and the floating wing-tip ailerons on the tapered wing is given by figures 10 and 12. These results show the floating wing-tip ailerons to be only about one-half as effective as the conventional ailerons. Observations made of the control effectiveness at and beyond the stall showed that, although the airplane could not be controlled laterally at the stall with either of the ailerons, some control effectiveness was retained beyond the stall with the floating wing-tip ailerons but not with the conventional ailerons.

Aside from the low rolling effectiveness of the wing-tip ailerons, their behavior was normal. The results of the partial-deflection tests given in figure 9 show that the variation of control effectiveness with aileron deflection is nearly linear. No lag or sluggishness was recorded or observed by the pilots. A small positive yawing action was noted. The pilots estimated that the stick forces with the wing-tip ailerons were about one-quarter of those for the conventional ailerons on the rectangular wing.

It is appreciated that the area of the wing-tip ailerons could be considerably increased in size with an accompanying increase in effectiveness before the stick forces approach those of conventional ailerons. (See reference 5.) This increase in aileron area could not be accomplished, however, without unduly increasing the span and weight of the wing. It is believed that the wing-tip ailerons tested are the largest size practicable for the wing.

CONCLUSIONS

1. The effectiveness of the conventional ailerons was slightly greater on the tapered than on the rectangular wing but the difference was not sufficient to be appreciated by the pilots.
2. The floating wing-tip ailerons were considered unsatisfactory because their rolling action was approximately half that for the conventional ailerons.

Langley Memorial Aeronautical Laboratory,
National Advisory Committee for Aeronautics,
Langley Field, Va., *October 27, 1937.*

REFERENCES

1. Weick, Fred E., and Wenzinger, Carl J.: Wind-Tunnel Research Comparing Lateral Control Devices, Particularly at High Angles of Attack. IX. Tapered Wings with Ordinary Ailerons. T. N. No. 449, N. A. C. A., 1933.
2. Wenzinger, Carl J.: Wind-Tunnel Investigation of Tapered Wings with Ordinary Ailerons and Partial-Span Split Flaps. T. R. No. 611, N. A. C. A., 1937.
3. Weick, Fred E., and Jones, Robert T.: Résumé and Analysis of N. A. C. A. Lateral Control Research. T. R. No. 605, N. A. C. A., 1937.
4. Soulé, H. A., and McAvoy, W. H.: Flight Investigation of Lateral Control Devices for Use with Full-Span Flaps. T. R. No. 517, N. A. C. A., 1935.
5. Weick, Fred E., and Harris, Thomas A.: Wind-Tunnel Research Comparing Lateral Control Devices, Particularly at High Angles of Attack. XI. Various Floating Tip Ailerons on Both Rectangular and Tapered Wings. T. N. No. 458, N. A. C. A., 1933.