FILE COPY
No. 1

FILE COPY
To be returned to the Files of
Ames Aeronautical Laboratory
National Advisory Committee
for Aeronautics
Moffett Field, Calif.

~~5313~~
~~NACA 16~~

N.A.C.A.

TECHNICAL NOTES

NATIONAL ADVISORY COMMITTEE FOR AERONAUTICS

No. 670

N.A.C.A. STALL-WARNING INDICATOR

By F. L. Thompson
Langley Memorial Aeronautical Laboratory

Washington
October 1938

NATIONAL ADVISORY COMMITTEE FOR AERONAUTICS

TECHNICAL NOTE NO. 670

N.A.C.A. STALL-WARNING INDICATOR

By F. L. Thompson

SUMMARY

The stall-warning indicator employs a total-head tube located close to the wing surface in a region wherein local stalling occurs before the main portion of the wing stalls. The artificial production of a localized stalled region is accomplished by means of a sharp leading edge extending a few inches along the span. An abrupt drop in the total pressure relative to a static reference taken at some convenient point occurs at the stall in this region. This drop in total pressure causes the contraction of a pressure cell to which the total-head tube and the static orifice are connected and closes an electrical circuit that actuates a warning signal.

INTRODUCTION

With some airplanes the approach to the stall is accompanied by changes in the behavior, such as tail buffeting or changes in the control characteristics of the airplane so that the pilot obtains a warning of the impending stall. With other airplanes it is possible to approach the stall without any perceptible warning other than the reading of the air-speed meter, in which case the danger of inadvertent stalling is considerably greater. Although it is not within the scope of this paper to discuss stalling characteristics, it is desired to point out that in general the danger of inadvertent stalling is greatest with those airplanes that behave worse when the stalling occurs; that is, with airplanes in which the stall starts at the wing tips. A warning of the impending stall is desirable in any case, but is particularly desirable with airplanes of the latter type.

When there is nothing in the behavior or control characteristics of the airplane that indicates the impending stall, great dependence must be placed on the air-speed meter. Unfortunately, however, the stalling speed varies with wing loading and the air-speed meter therefore is not a reliable stall indicator. When the load changes or the airplane undergoes acceleration, as, for example, in turns, the stalling speed increases in proportion to the square root of the load factor

$$V_{stall} = V_{min} \sqrt{\text{load factor}}$$

In horizontal turns the load factor is directly related to the angle of bank

$$\text{Load factor} = \frac{1}{\cos \text{angle of bank}}$$

so that for horizontal turns

$$V_{stall} = V_{min} \sqrt{\frac{1}{\cos \text{angle of bank}}}$$

The load factor and the ratio of V_{stall} to V_{min} in turns are plotted in figure 1 to show how these quantities vary with angle of bank. The curve of stalling speed is an ideal one that does not take into account the influence of errors in the air-speed meter reading. In general, such errors will further complicate the situation because calibrations made in steady flight will not apply in accelerated flight unless the correction for position error of the air-speed head is negligible. If an instrument is to be used to give a warning of the stall, therefore, it appears desirable that its functioning should be dependent on angle of attack rather than air speed. Furthermore, it seems desirable in order to avoid the necessity for watching the instrument continuously that it be arranged to give a warning signal when a safe limit has been reached.

STALL-WARNING DEVICE

A stall-warning device developed by the National Advisory Committee for Aeronautics is shown diagrammatically in figure 2. It makes use of a modified type of pitot-static head set close to the wing surface in a region wherein stalling occurs (or is made to occur) at an angle of attack considerably below that at which the main portion of the wing stalls. This head is connected to a pressure cell fitted with electrical contacts and for observations during tests it may also be connected to a conventional air-speed meter. When the air flow in the region in which the head is located breaks away from the wing surface, that is to say, when local stalling occurs, the pressure indicated by the head drops sharply to zero. When this occurs the electrical contacts close a circuit that operates a warning signal. The signal as used in flight tests of this device was a horn such as that used with retractable landing gears, but of course any suitable type of warning may be used.

In certain cases it may be known as the result of air-flow surveys with silk tufts or other means that there is a region wherein local stalling occurs sufficiently before the stall of the main portion of the wing so that the artificial production of such a region is unnecessary. The more general case, however, is one in which it is necessary to produce such a region artificially. The requirements of the arrangement used in such cases are that it should produce local stalling early enough so as to provide ample warning of the complete stall and that it should not adversely affect the aerodynamic characteristics of the airplane. It appeared that the most suitable means for accomplishing this result was the use of a sharp leading edge over a small portion of the wing span. Flight experiments, therefore, were made with such an arrangement.

The head used in the experiments with different nose pieces is shown in figure 3. Table I shows the various arrangements of sharp edge and head that were tested and figure 4 shows photographs of combination H. For the tests the contacting device was set to operate when the local air speed as indicated by the stall-warning device dropped below 70 miles per hour. As will be shown later, this setting was appreciably below what would normally be the local velocity over the curved portion of the leading edge of the wing at the minimum speed of the airplane on which the tests were made. A considerable variation of this setting, however, would not have altered the results appreciably.

FLIGHT TESTS AND RESULTS

The airplane used in the tests was a Fairchild 22 fitted with a wing of rectangular plan form, having a chord of 66 inches and an N-22 section. This wing was equipped with full-span Zap flaps. The head of the stall-warning device was placed outboard from the center a distance equal to about two-thirds the semispan where early stalling did not normally occur. Throughout the tests an air-speed meter was connected in the line of the stall-warning device so as to obtain more complete information concerning the functioning of the device than could be obtained by use of the warning signal alone.

The flight tests of different arrangements were made

in order to determine one that was unobtrusive and at the same time would give sufficient warning in straight flight and in turns. For the small light airplane on which the tests were made, it was decided arbitrarily that a satisfactory warning consisted of one given at roughly 10 to 15 miles per hour above the stalling speed for any particular condition; that is, it was considered that this warning should be given with power on, power off, flaps up, or flaps down. Exact measurements of airplane speed were not made, the only readings being those observed by the pilot on the meter with which the airplane was regularly equipped and which was known to read considerably lower than the actual speed of the airplane at the lower end of the speed range. The extra effort involved in obtaining exact measurements seemed unwarranted since the results would have no more general application to other airplanes of different form than would approximate readings that are qualitatively accurate. The results for the complete series of tests, therefore, as presented in table I are shown in qualitative form; that is, whether the arrangement is considered to be satisfactory or unsatisfactory, with some additional remarks pertaining to certain arrangements.

Before a comparison is made of the results obtained with different arrangements, it seems advisable to describe the general characteristics of the behavior of the device by reference to figure 5. This figure shows the readings of the meter connected to the stall-warning head plotted against the readings of the air-speed meter of the airplane with arrangement F and also with the sharp edge removed. The results shown in this figure for arrangement F are typical of arrangements considered to be satisfactory. It will be noted that whereas the reading of the air-speed meter of the airplane at minimum speed is 42 miles per hour, the warning is obtained at about 59 miles per hour, the speed at which the local velocity falls below 70 miles per hour. Without the sharp edge the local velocity over the leading edge of the wing does not fall below 90 miles per hour. It may also be noted that, although the device was set to warn when the local velocity reached 70 miles per hour, a change of setting of several miles per hour in either direction would not have greatly altered the airplane speed at which the warning occurred. In other words, the adjustment of the contacting device was not critical. One other point of practical interest brought out by figure 5 is that in the normal flight range the local velocity is considerably greater than the air

speed of the airplane, so that the pressure unit used in the contacting device must be rugged enough to withstand pressures much larger than the dynamic pressure corresponding to the maximum speed of the airplane relative to undisturbed air.

It appears from a study of the results given in table I that the functioning of the stall-warning device is adjustable through a considerable range by means of alterations of the shape and size of the sharp edge and of the nose of the head. It appears to be very important that the dynamic opening of the head be close to the wing surface in order to avoid the necessity for a large, sharp edge. With the dynamic opening above the wing surface about one-half inch as it was with the original nose piece, satisfactory results were obtained only with the large, sharp edges of arrangements A and B. With the dynamic opening brought down close to the surface, satisfactory results were obtained with the sharp edge reduced to a length of 6 inches in a spanwise direction and an extension of 11/16 inch in a chordwise direction (arrangements F and H). A further reduction in size might have been possible but appeared to be unnecessary in view of the apparent insignificance of the alteration of the wing contour.

APPLICATION OF STALL-WARNING DEVICE

In general, the stall-warning device will require two heads installed on the airplane, one near each wing tip. With such an arrangement the asymmetry of the angle-of-attack distribution in banking, which amounts to something of the order of 5° or 6°, will be taken care of. Another advantage of placing the device at the tip is that it can be placed beyond the edge that is covered by the rubber overshoes that are commonly used for deicers. The sharp edge probably will be required in general, but at least one example is known wherein the extreme tip portion of the wing was shown by silk tufts to stall well before there was any loss of lateral control or appreciable disturbance of the total lift. In such a case apparently it would be possible to mount the head within the region that was observed to be stalled and dispense with any artificial means of stall production.

The size of the sharp edge required on a larger wing than that used in the tests reported herein is open to question. A geometrically similar but scaled-up arrangement probably would be satisfactory, but it seems possible that a relatively smaller sharp edge might be satisfactory. The important point to keep in mind appears to be that, as indicated by the present tests, the dynamic opening should be placed close to the surface and close to the sharp edge. It is interesting to note that on highly tapered wings, even on very large airplanes, the tip sections would not be materially larger than the section of the rectangular wing on which the tests were made.

The behavior of the stall-warning device under icing conditions is unknown. In designing the head, provision was made for heating it electrically as is common practice with air-speed heads, as proper functioning of the device would demand that it be kept free from ice formation. If it did become clogged with ice, it would presumably give a warning signal as though the wing were stalled at all times. The influence of ice on the sharp edge in front of the head might or might not impair the functioning of the device. It is possible that the ice would cause the head to indicate a stall at a somewhat lower angle of attack than customary. In this case the effect might be desirable since ice adhering to the main portion of the wing probably would cause the complete wing to stall earlier than usual.

It is of interest to note a particular application that the device might have to highly maneuverable pursuit or fighter airplanes. Several such airplanes are so easily stalled without warning in violent maneuvers that such stalling is often inadvertent. It may occur in dive pull-outs, sharp turns, loops, or other maneuvers at speeds ranging from the minimum speed in level flight to about two- and one-half times this minimum speed, depending upon the acceleration imposed. When the stall occurs the airplane rolls more or less violently, depending on how the stall develops and the stability characteristics of the airplane. In fact, the maneuverability of the airplane may be seriously limited by this characteristic. It would appear that the stall-warning device would be very useful in such cases and it appears desirable that an installation be made on an airplane of this class for flight trials. It would be very important in such an installation that the moving parts of the contacting device or other moving parts be unaffected by the high acceleration.

In conclusion, it is desired to point out that the application of the principles involved in the stall-warning device is subject to a wide variation as regards the constructional details. The head used in the flight tests was built around a cylindrical heating element of the type that has been used in certain electrically heated pitot tubes. A neater installation of the head is undoubtedly possible in view of the fact that the only part that need be exposed to the air stream is the dynamic opening. The static reference pressure could be obtained from an orifice set flush with the wing surface or possibly the internal wing pressure or cabin pressure could be used as a satisfactory reference pressure. It seems undesirable to use the air-speed static as a reference because such a connection would make the warning device dependent on the proper functioning of the air-speed line. It is necessary, however, with whatever type of head used, to provide suitable drains and a heating element to prevent rain and ice from interfering with the functioning of the device. These requirements will, in a large measure, determine the design of the head.

Langley Memorial Aeronautical Laboratory,
National Advisory Committee for Aeronautics,
Langley Field, Va., February 10, 1938.

TABLE I.- TESTS OF STALL WARNING DEVICE - ARRANGEMENTS TESTED AND RESULTS.

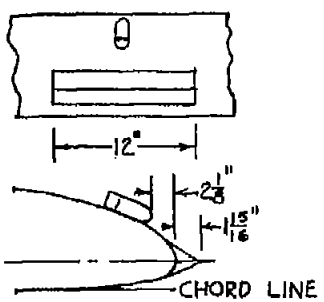

A

Satisfactory with flaps up.
Not tried with flaps down.

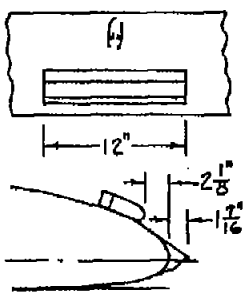

B

Satisfactory.

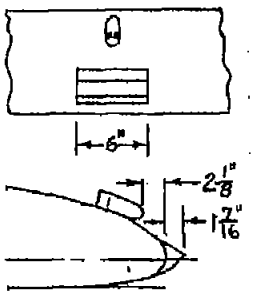

C

Unsatisfactory.
Insufficient and erratic warning.

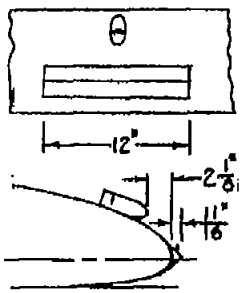

D

Unsatisfactory.
Insufficient warning with flaps up.

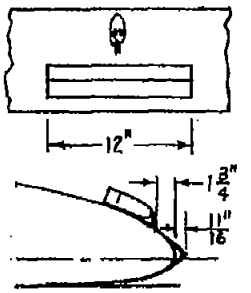

E

Satisfactory.

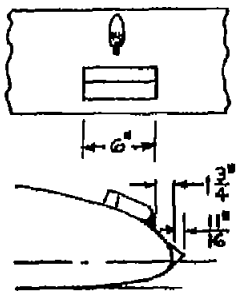

F

Satisfactory.

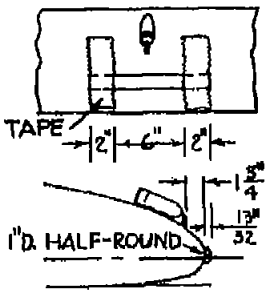

G

Unsatisfactory.
Insufficient warning, particularly with flaps up.

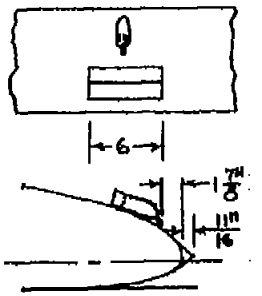

H

Satisfactory.

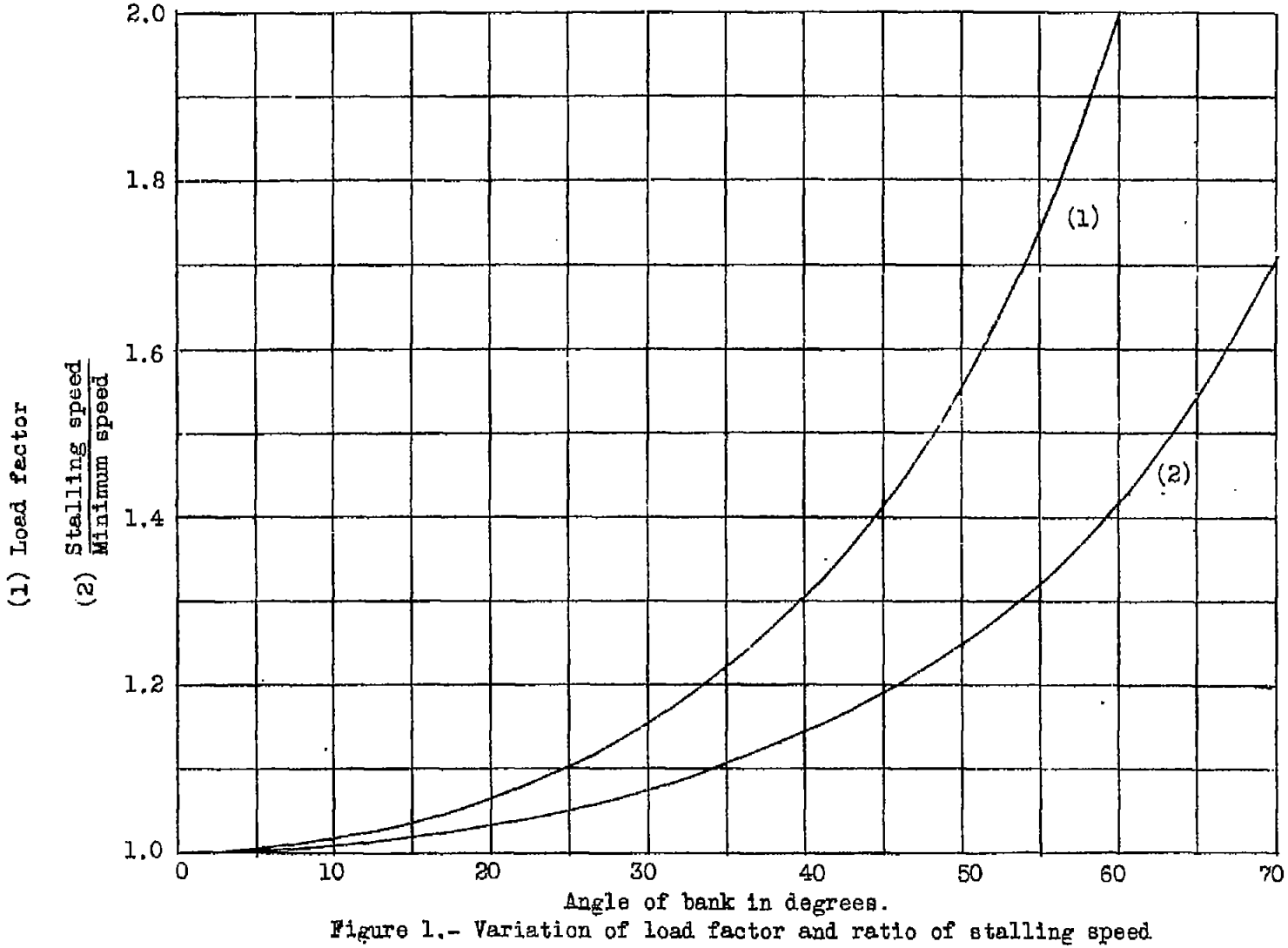

Figure 1.- Variation of load factor and ratio of stalling speed to minimum speed with angle of bank in horizontal turns.

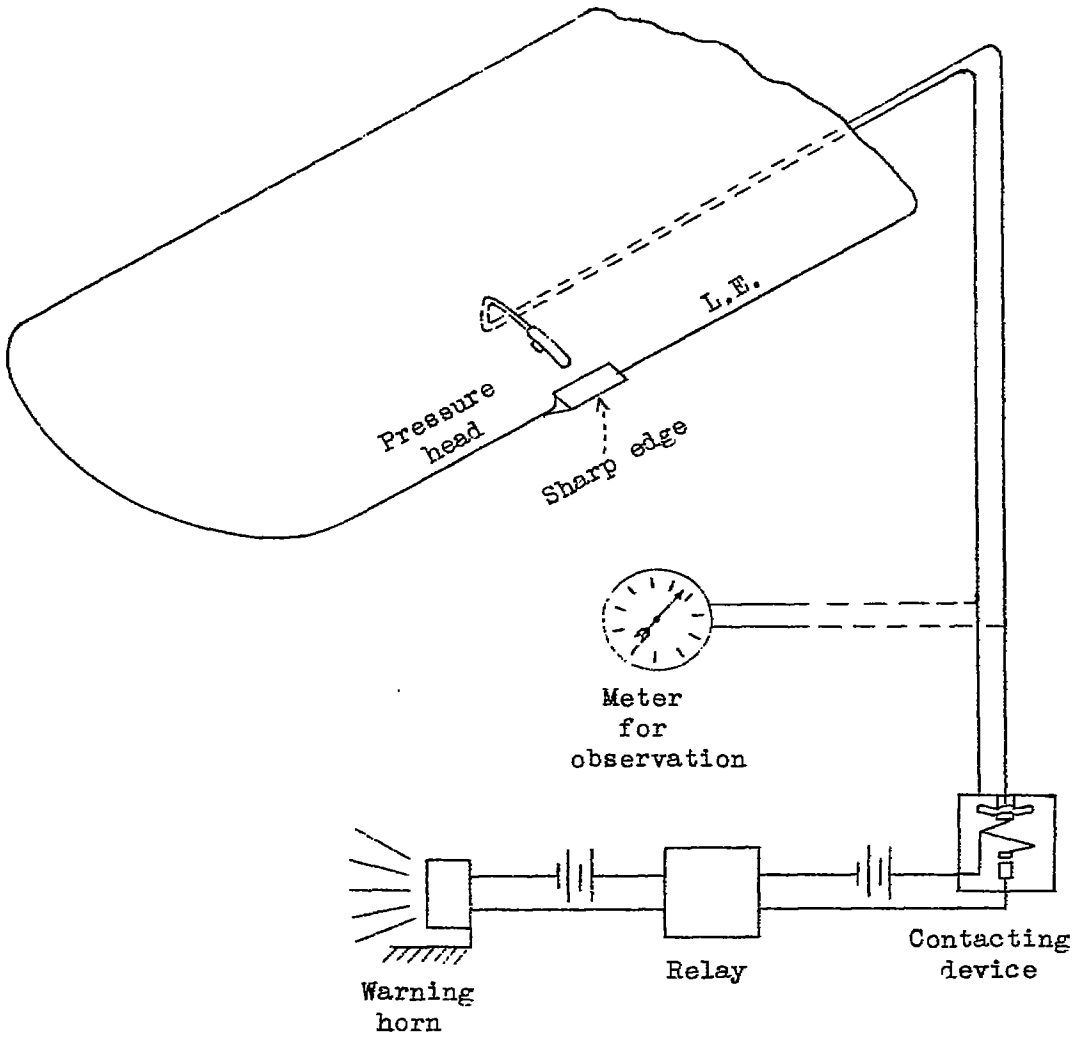

Figure 2.- Diagram of stall warning device.

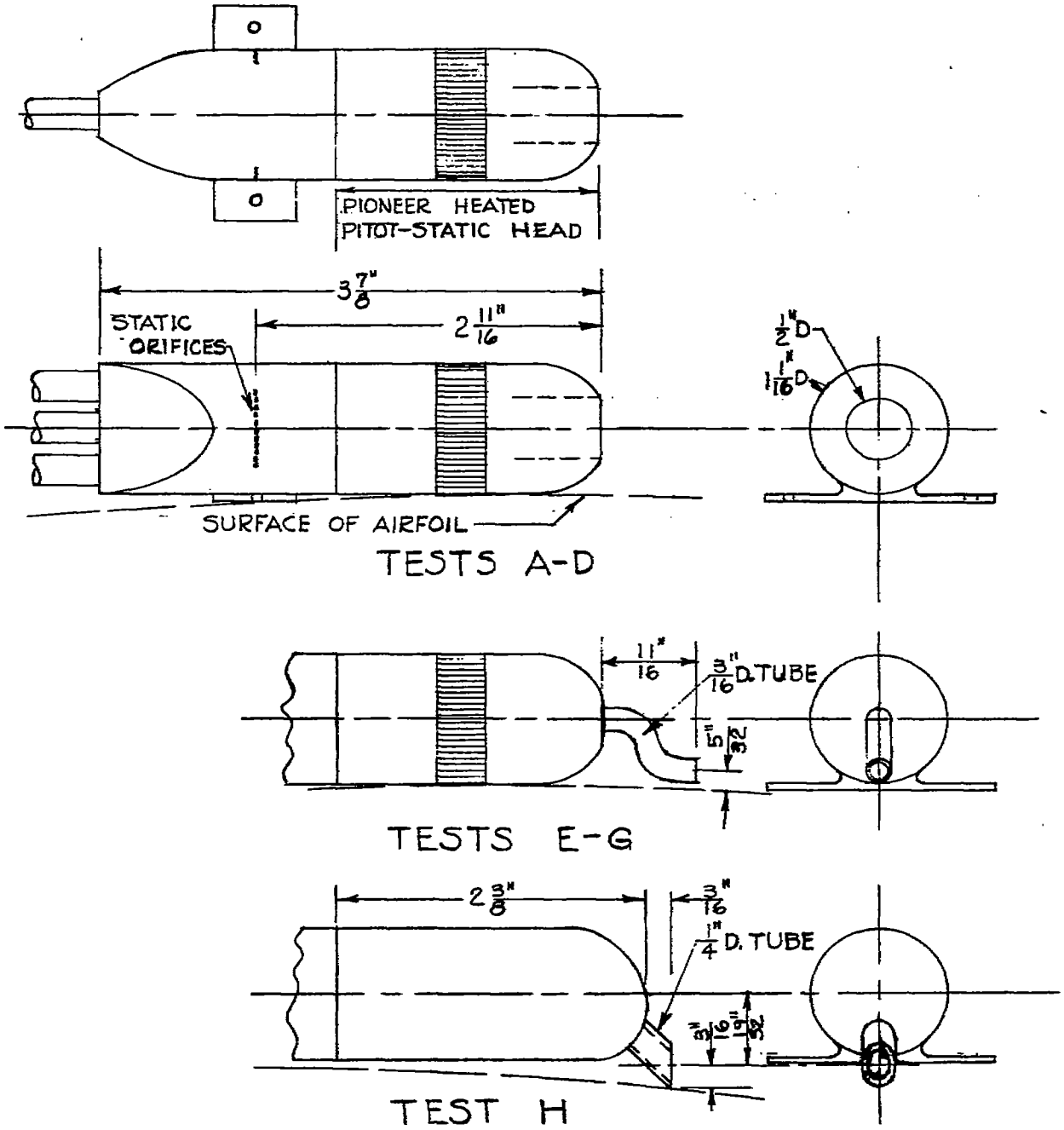

FIGURE 3.- PRESSURE HEADS USED WITH STALL WARNING DEVICE.

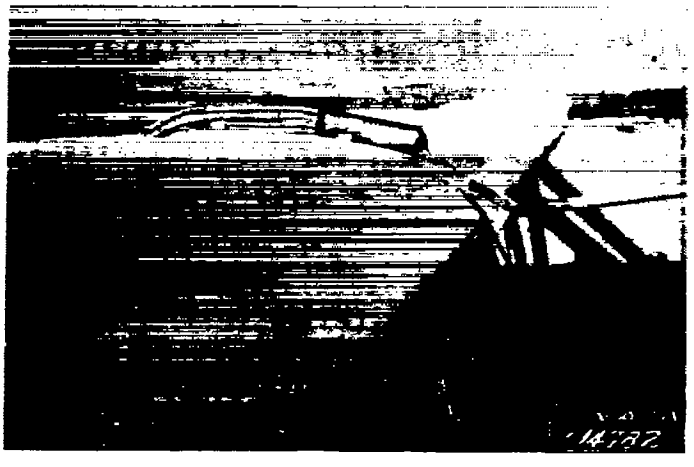

Figure 4.- Stall-warning device installed on wing of Fairchild 22 airplane.

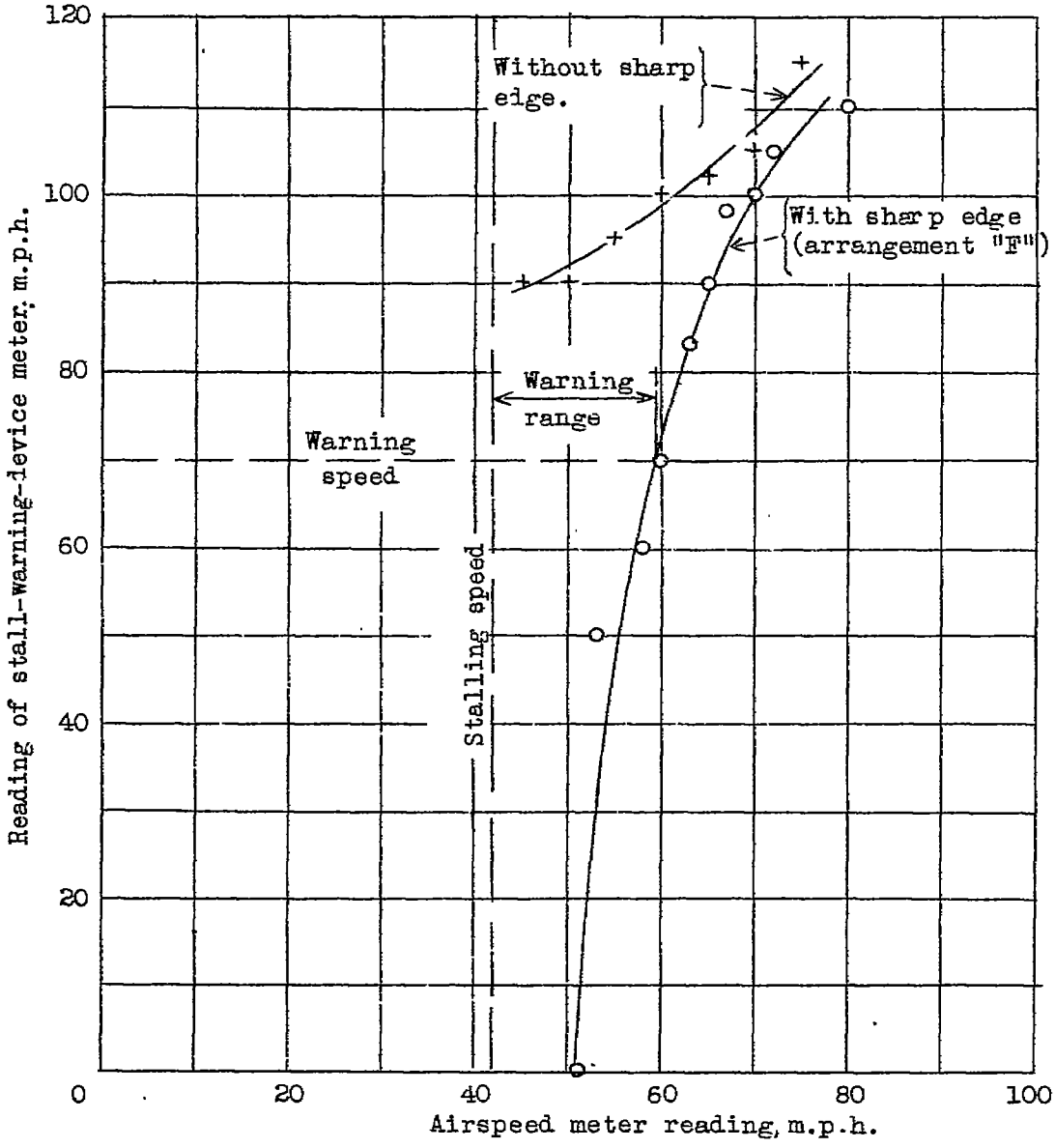

Figure 5.- Characteristics of stall-warning device for typical case.