REPORT No. 673

EXPERIMENTAL VERIFICATION OF THE THEORY OF OSCILLATING AIRFOILS

By Abe Silverstein and Upshur T. Joyner

SUMMARY

Measurements have been made of the lift on an airfoil in pitching oscillation with a continuous-recording, instantaneous-force balance. The experimental values for the phase difference between the angle of attack and the lift are shown to be in close agreement with the theory.

INTRODUCTION

The theory for the lift of infinite-span airfoils oscillating in pitch with small amplitude in a uniform stream of perfect fluid has been exhaustively studied and now provides a basis for the aerodynamic analysis of the flutter problem. Wagner's theory (reference 1) for calculating the lift on an airfoil in nonuniform motion has been followed by those of Küssner (reference 2), Glauert (reference 3), and Theodorsen (reference 4); Garrick has indicated (reference 5) that the several theories are in agreement. Jones has given certain approximations (reference 6) to account for the effect of finite span.

At the suggestion of Theodorsen, tests have been made to obtain experimental data for a direct comparison of the measured lift on an oscillating airfoil with that predicted by the theory. The accuracy of the theory has been essentially substantiated in a less direct manner by the agreement of experimental and theoretically predicted flutter phenomena.

In a comparison of an oscillating airfoil with one in uniform motion, the theory indicates that the principal effect of the oscillation is to change the angle of attack at which a given lift occurs; for example, zero lift on an oscillating symmetrical airfoil does not occur at zero angle of attack. The phase difference between the lift and the angle of attack depends on the location of the axis along the airfoil chord and on a nondimensional parameter describing the wave length of the oscillating vortex sheet in the airfoil wake. For an infinite frequency of oscillation and a forward location of the axis, the lift would lead the angular displacement by 180°. At finite frequencies, the countervorticity of the oscillating vortex sheet produces, in general, a lag that opposes the inertia effect causing the leading force. At low frequencies, the lag predominates; and, at zero frequency (steady motion), the lag again disappears.

It was planned to verify the theory by measurements of the phase difference between the lift and the angle of attack for an airfoil in rotational oscillation at various frequencies and air speeds. For these measurements, an instantaneous-force balance was designed with which the lift and the angle of attack of an oscillating airfoil could be continuously recorded. The measurements were made in a 2- by 3-foot tunnel on a symmetrical airfoil of about 5-inch chord and 18 percent thickness. The axis of rotation was located at the quarter-chord point of the airfoil. Measurements were taken for values of frequencies and air speeds that covered the useful flutter range.

SYMBOLS

α, angle of attack ($\alpha=\alpha_0 \sin pt$).
α_0, amplitude of oscillation.
b, half chord of airfoil.
v, air speed at infinity.
p, 2π times the frequency of oscillations.
k, reduced frequency (pb/v); wave length in vortex sheet is $2\pi b/k$.
a, coordinate of axis of oscillation. (See reference 4.)
L, lift force on airfoil.
t, time.
F and G, circulation functions. (See reference 4.)
δ, phase difference between angle of attack and lift for oscillating airfoil. Positive values indicate a leading force.
θ, phase difference due to natural frequency of recording instrument.
n, damping constant of airfoil and balance.
r, 2π times natural frequency of vibration of airfoil and balance.
A, aspect ratio.

PHASE RELATIONS FOR OSCILLATING AIRFOILS

Following the method of Theodorsen (reference 4), the lift on an airfoil oscillating in pitch, in a uniform stream of perfect fluid, with one degree of freedom about an axis parallel to the span is given (reference 5) as

$$\begin{aligned} L=&\rho b^2(v\pi\alpha_0 p\cos pt+\pi ba\alpha_0 p^2\sin pt)\\ &+2\pi\rho vbF\left[v\alpha_0\sin pt+b\left(\frac{1}{2}-a\right)\alpha_0 p\cos pt\right]\\ &+2\pi\rho vbG\left[v\alpha_0\cos pt-b\left(\frac{1}{2}-a\right)\alpha_0 p\sin pt\right] \end{aligned} \tag{1}$$

Regrouping terms and substituting $k=pb/v$ and $a=-\frac{1}{2}$ (axis at quarter-chord line), the expression becomes

$$\begin{aligned} L=&\pi\rho b\alpha_0 v^2(k+2kF+2G)\cos pt\\ &+\pi\rho b\alpha_0 v^2\left(-\frac{1}{2}k^2+2F-2kG\right)\sin pt \end{aligned} \tag{2}$$

or

$$L=A_0\sin pt+B_0\cos pt \tag{3}$$

in which

$$\left.\begin{aligned} A_0&=\pi\rho b\alpha_0 v^2\left(-\frac{1}{2}k^2+2F-2kG\right)\\ B_0&=\pi\rho b\alpha_0 v^2(k+2kF+2G) \end{aligned}\right\} \tag{4}$$

Expression (3) may be readily rewritten as

$$L=C_0\sin(pt+\delta) \tag{5}$$

in which

$$\delta=\tan^{-1}(B_0/A_0) \tag{6}$$

and

$$C_0=\sqrt{A_0^2+B_0^2} \tag{7}$$

The angle δ is the phase difference due to the oscillation, and C_0 is a measure of the slope of the lift curve for the oscillating wing. It will be noted from equations (4) and (6) that the value of the phase angle δ is a function of k, F, and G. The term k is a fundamental parameter that links together the frequency of the wing oscillation and the air speed. It may be noted that $2\pi/k$ is the distance between successive waves in the vortex sheet in terms of the half-chord length b as a reference length. The functions F and G determine the circulation so as to satisfy the Kutta condition for the oscillating airfoil, and their values are given as functions of $1/k$ for the case of an infinite-span airfoil in reference 4. For finite aspect ratio, reference 6 gives certain approximate corrections employing "effective" values of F and G.

APPARATUS AND TEST METHOD

The tests were conducted in the 1/15-scale model of the N. A. C. A. full-scale wind tunnel, which is described in reference 7. The test section was modified to a 2- by 3-foot rectangle with sides but without top or bottom. The side walls served as end plates for the airfoil that spanned the 3-foot width of the jet. Surveys across the tunnel air stream showed variations of ± 2 percent in the dynamic pressure and ± 0.6° in the air-stream direction, the effects of which were not considered important enough to warrant correction.

A diagram and a photograph of the apparatus used are shown in figures 1 and 2, respectively. The airfoil F (fig. 1) was an 18-percent-thick symmetrical section with a chord of 5 3/16 inches and a span of 36 3/4 inches. It was of hollow construction with 0.016-inch sheet-aluminum covering and weighed only 0.66 pound. The counterweight I, the end plates C, the mounting shafts, and the self-alining ball bearings B brought the total weight of the oscillating assembly up to 1.52 pounds. The airfoil projected through the sides of the test section L, and separate end plates C were attached that rotated with the airfoil to prevent air leakage through the walls due to the airfoil pressures. This arrangement was used to achieve an effective aspect ratio approaching that for an infinite-span airfoil. The axis of oscillation, i. e., the axis of the mounting shafts, was located at the quarter-chord point of the airfoil.

The instantaneous force balance was designed to measure the force on one end of the airfoil by measuring the deflection of a stiff spring P to which the airfoil was attached. The attachment was made by means of a self-alining ball bearing, which provided freedom for the wing to rotate about its axis and for the spring to deflect without restraint. In order to record the deflection of the spring, two styluses were arranged to rotate the mirrors J and N and thereby displace light beams that were focused on a sensitized film. The spring deflections in both the lift and the drag directions were recorded by mirrors J and N. (This paper is confined to a discussion of the lift forces only.) In order to obtain a continuous record, the recording film was attached to a circular drum rotated by a synchronous motor H at a constant film speed of 39 inches per second. The balance was calibrated by means of loads applied at the center of the airfoil.

The design of the spring P was dictated by the consideration that accurate measurements of the phase difference by means of a spring require the natural frequency of the vibrating system to be considerably higher than the impressed frequency. The angle of lag θ of the recorded force behind the impressed force in terms of the natural frequency of the vibrating system r is given (reference 8) as

$$\theta=\tan^{-1}\frac{2pn}{r^2-p^2}$$

in which n, the damping coefficient, is obtained from a measurement of the decrease in amplitude of successive vibrations. That is,

$$A_2=A_1e^{-nt}$$

in which A_1 and A_2 are the amplitudes of successive vibrations occurring in the period t. The values of the constants n and $r/2\pi$ for the wing and the balance are

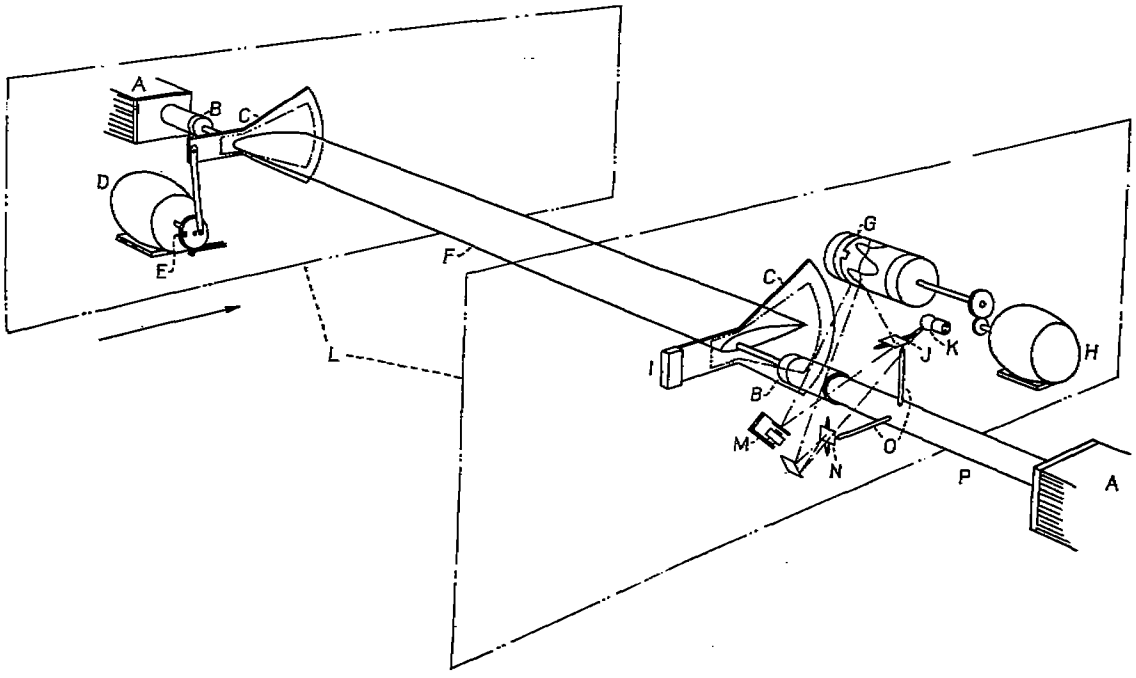

A, supports.
B, self-alining ball bearings
C, end plates on airfoil.
D, direct-current driving motor.
E, timing-unit contacts.
F, airfoil.
G, film drum and record.
H, synchronous-motor film drive.
I, counterweight.
J, lift mirror.
K, light.
L, sides of wind tunnel.
M, timing unit.
N, drag mirror.
O, stylus.
P, tubular cantilever spring.

FIGURE 1.—Airfoil and continuously recording balance used in the oscillating-airfoil tests.

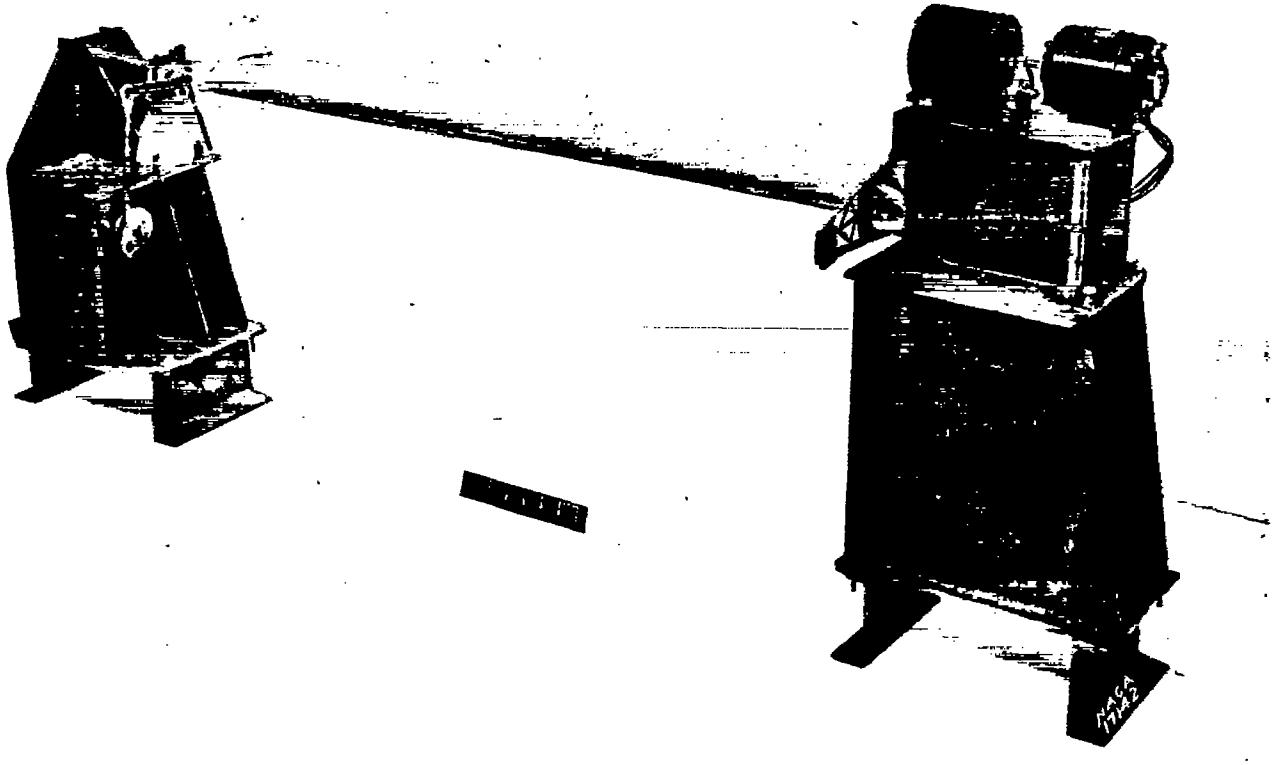

FIGURE 2.—Airfoil and balance installation used to measure the forces on an oscillating airfoil.

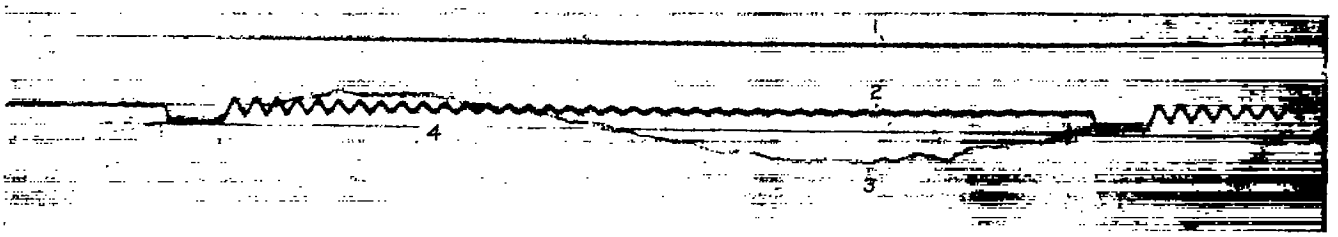

FIGURE 3.—Typical photographic record obtained with oscillating-airfoil balance.

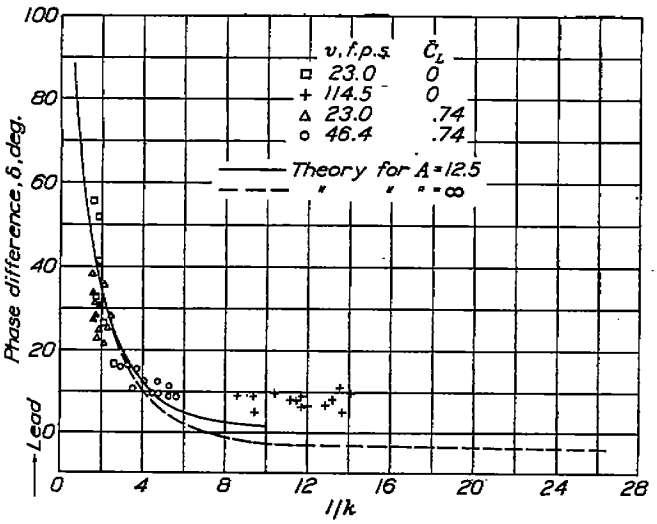

FIGURE 4.—Comparison of experimental and theoretical values of the phase difference δ for various values of the parameter $1/k$.

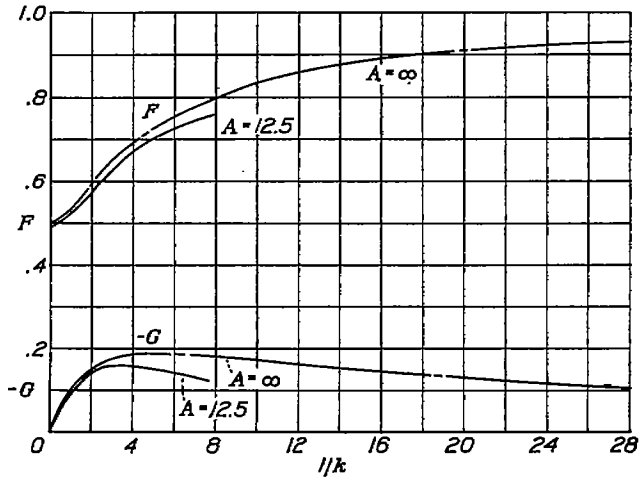

FIGURE 6.—Theoretical values of circulation functions F and G.

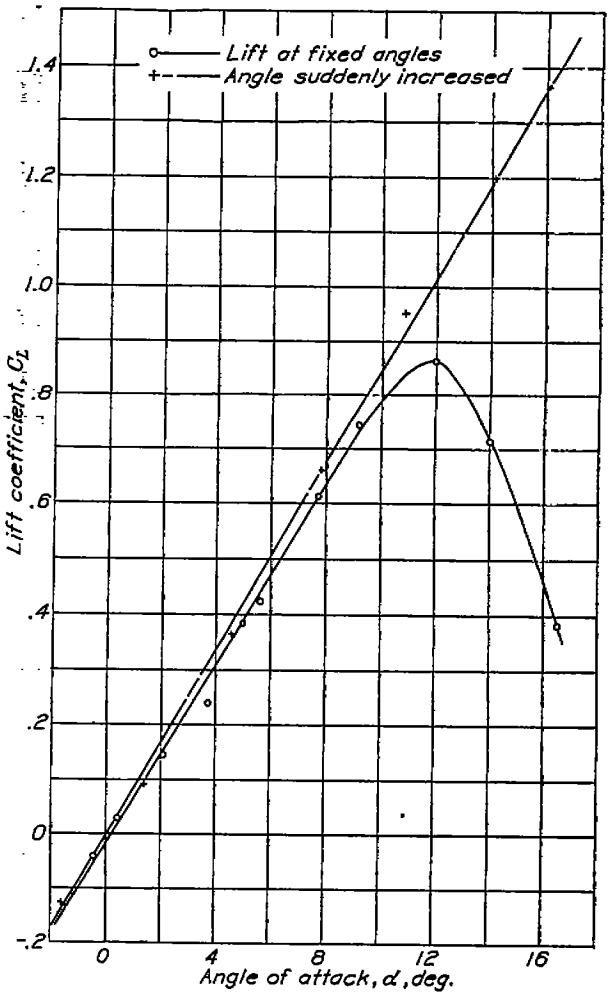

FIGURE 5.—Lift curves for the airfoil tested in steady motion at fixed angles and for a test in which the angle of attack was suddenly increased.

14.8 and 53.5, respectively. The value of $r/2\pi$ for the spring P is 280 cycles per second. Since all the tests with the balance were made at oscillation frequencies lower than 17 cycles per second, the maximum phase error was 1.8°, which is of the same magnitude as the experimental errors.

It was necessary to balance dynamically the oscillating mass about the axis of rotation. For this purpose, a weight I was placed ahead of the axis of rotation to provide static and dynamic balance within the accuracy of the balance measurements.

The wing was oscillated in approximately sinusoidal motion about its axis by the direct-current motor D, which was controllable so that any desired frequency could be obtained. The wing was oscillated at the end opposite to the one at which the forces were measured. A time history of the angular position of the airfoil was recorded on the same film that was used to record the forces. This record was obtained by means of a rotating contact E attached to the driving motor. Once each revolution, this contact energized an electromagnet M, which deflected a mirror and moved a light beam on the film G. The lag of the timing system was measured by an oscillograph and found to be 0.0014 second.

A typical record of the measurements taken photographically with the oscillating-airfoil balance is shown in figure 3. Line 1 (fig. 3) is a stationary reference line; line 2 is the record of the timing element; and line 3 is the trace of the deflection of spring P and therefore is a record of the lift on the airfoil. The oscillations occurring in the timing line 2 are of no interest.

If, for example, oscillation about the angle of zero lift is assumed, the intersection of the lift line 3 with the zero line 4 determines the point of zero lift. By static calibration, the angular position of the airfoil corresponding to this point on the record is readily determined. A small correction is applied to take into account the lag in the timing unit. The phase angle is then directly obtained as the difference between the angular position of the curves for zero lift and zero angle.

RESULTS AND DISCUSSION

The measured phase difference δ for various values of the parameter $1/k$ are shown in figure 4. It will be noted in some cases that the same value of $1/k$ was obtained with several values of p and v.

Before the theoretical values of δ could be computed, it was necessary to determine the effective aspect ratio of the airfoil for the test conditions. This value was derived from the value of the lift-curve slope determined by means of static lift observations at numerous angles of attack (fig. 5). The effective aspect ratio is 12.5, which may be compared with the geometric value of 7.07. The leakage around the end plates of the airfoil prevented the realization of a higher value of the effective aspect ratio. For comparison, the lift curve is given (fig. 5) for the case in which the angle of attack of the airfoil is suddenly increased. The slope of the curve is about the same; the stalling of the moving airfoil at the higher angles of attack, however, does not occur.

The values of F and G corresponding to the effective aspect ratio were obtained from reference 6 and are shown in figure 6 against $1/k$. Values for an infinite-span airfoil from reference 4 are also shown. The theoretical values of δ computed by equation (6) with values of F and G from figure 6 are shown with the experimental results in figure 4. Consideration was given to changing the inertia terms in equation (6) to take into account the decreased virtual volume due to the finite span of the airfoil. Calculations indicate this effect to be inappreciable.

The experimental and the theoretical values for the finite-span airfoil show phase differences of no more than about 5°. The corrections applied to the infinite-aspect-ratio theory to take the finite span into account are in the direction of improving the agreement between the theory and experiments.

It is noted that, at low frequencies of oscillation (large values of $1/k$, fig. 4), a lead that is consistently larger than expected appears. The study of the cause of this discrepancy will be left for a future investigation.

Langley Memorial Aeronautical Laboratory,
National Advisory Committee for Aeronautics,
Langley Field, Va., *April 24, 1939.*

REFERENCES

1. Wagner, Herbert: Über die Entstehung des Dynamischen Auftriebes von Tragflügeln. Z. f. a. M. M., Bd. 5, Heft 1, Feb. 1925, S. 17–35.
2. Küssner, Hans Georg: Schwingungen von Flugzeugflügeln. Jahrb. 1929, DVL, S. 313–334.
3. Glauert, H.: The Force and Moment on an Oscillating Aerofoil. R. & M. No. 1242, British A. R. C., 1929.
4. Theodorsen, Theodore: General Theory of Aerodynamic Instability and the Mechanism of Flutter. T. R. No. 496, N. A. C. A., 1935.
5. Garrick, I. E.: Propulsion of a Flapping and Oscillating Airfoil. T. R. No. 567, N. A. C. A., 1936.
6. Jones, Robert T.: The Unsteady Lift of a Finite Wing. T. N. No. 682, N. A. C. A., 1939.
7. Theodorsen, Theodore, and Silverstein, Abe: Experimental Verification of the Theory of Wind-Tunnel Boundary Interference. T. R. No. 478, N. A. C. A., 1934.
8. Timoshenko, S.: Vibration Problems in Engineering. D. Van Nostrand Co., Inc., 1928, pp. 24–27.