REPORT No. 681

THE UNSTEADY LIFT OF A WING OF FINITE ASPECT RATIO

By Robert T. Jones

SUMMARY

Unsteady-lift functions for wings of finite aspect ratio have been calculated by correcting the aerodynamic inertia and the angle of attack of the infinite wing. The calculations are based on the operational method.

The starting lift of the finite wing is found to be only slightly less than that of the infinite wing; whereas the final lift may be considerably less. The theory indicates that the initial distribution of lift is similar to the final distribution.

Curves showing the variation of lift after a sudden unit change in angle of attack, during penetration of a sharp-edge gust, and during a continuous oscillation are given. Operational equivalents of these functions have been devised to facilitate the calculation of lift under various conditions of motion. As an application of these formulas, the vertical acceleration of a loaded wing caused by penetrating a gust has been calculated.

INTRODUCTION

The two-dimensional potential theory of airfoils in nonuniform motion was given by Wagner (reference 1) and has been extended to problems involving the motion of hinged or flexible airfoils by Theodorsen (reference 2) and Küssner (reference 3).

In the case of steady motion, a correction is known to be necessary before the results of the two-dimensional theory can be applied to wings of finite aspect ratio. A theory for the unsteady lift of finite wings was developed in reference 4. This theory has since been somewhat improved mathematically by making use of operational methods in the solution of the integral equations. (See reference 5.) The present report combines this previous work and extends the theory to show the effects of gusts.

THE INDICIAL LIFT

INFLUENCE OF THE WAKE

Owing to the presence of circulation, the lifting wing leaves in its path a surface of discontinuity, the local vortex strength of which is determined by the rate of change of circulation taken both across the span and along the flight path. (See fig. 1.) The distribution of vorticity in the wake is determined by the assumption that the flow field at each instant conforms to the Kutta condition. An essential feature of the problem is the determination of the influence of this wake on the flow at the wing.

It is important to note that the wake is supposed to remain plane and undistorted. As a consequence of this assumption, the effects of different wakes are additive, permitting the various flows to be built up by superposition. Thus, if the solution for the growth of the increment of lift following a sudden change of normal velocity—or, what amounts to the same thing under the assumptions involved, a sudden change in the angle of attack—is known, this solution may be used as the element in an integral that gives the lift in any variable motion. With this point in mind, attention will at first be directed to the special case in which the wing starts suddenly from rest at $t=0$ with the

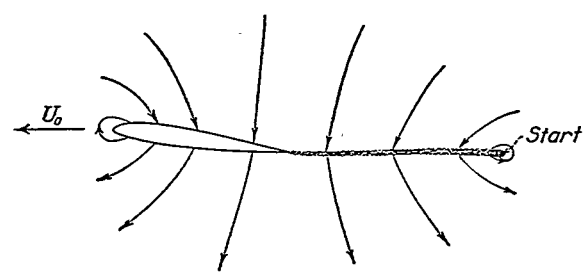

Figure 1.—Flow caused by wing starting from rest.

normal velocity w and the flight velocity U_0, the velocities remaining constant thereafter.

LIFT NEAR THE START

The starting lift of any wing may be expressed by a simple theorem based directly on the Kutta condition. As a consequence of this condition, the portion of the wake adjacent to the trailing edge must move as an impermeable extension of the wing surface. Thus, the first element of wake formed must move with the same normal velocity as the wing. The flow produced at the first instant is what might be caused by the wing in process of growing wider at the rate U_0 while moving downward with the velocity w. The starting lift may then be thought of as the reaction to uniform motion of the wing as a body with increasing mass:

$$L=w\frac{dm'}{dt} \tag{1}$$

where m' is the mass representing the aerodynamic inertia of the wing in normal motion.

In order to apply equation (1) to the finite wing, the inertia factor for such a wing must be known as a function of the width. Solutions for elliptic plates are given by the classical hydrodynamic theory, and these solutions can be used to represent approximately the initial rates of increase of inertia of wings of oval or elliptic plan form.

The distribution of potential over each chordwise section of an elliptic plate in normal motion has the same form as the corresponding two-dimensional potential. Thus

$$\phi=\frac{w}{E}\sqrt{1-x^2} \tag{2}$$

where E is the elliptic integral giving the ratio of the semiperimeter to the span. At the normal velocity $w=E$, the potential distribution over any chord is represented by a circle having the chord as diameter. (See fig. 2.) If the edge of the plate distorts into a slightly wider ellipse, the change in potential arising at any point will be measured by the difference between the original and the slightly expanded circles. (The change in the factor E during widening may be neglected for ordinary aspect ratios.) The pressure difference across the plate with changing potential is given by the formula

$$p=-2\rho\left(U_0\frac{\partial\phi}{\partial x}+\frac{\partial\phi}{\partial t}\right) \tag{3}$$

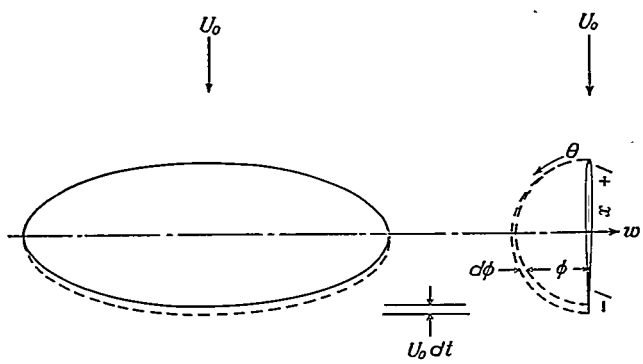

FIGURE 2.—The wake and the distribution of potential over the chord shortly after the start.

For $w=E$

$$\phi=\sqrt{1-x^2}=\sin\theta \tag{4}$$
$$\frac{\partial\phi}{\partial x}=\frac{-x}{\sqrt{1-x^2}}=-\cot\theta$$

and, from the geometry of the circle,

$$\left.\frac{\partial\phi}{\partial t}\right|_{t=0}=\left.\frac{\partial\phi}{\partial\Delta c}\frac{d\Delta c}{dt}\right|_{t=0}=U_0\left.\frac{\partial\phi}{\partial\Delta c}\right|_{\Delta c=0}=U_0\frac{1}{2}\cot\frac{\theta}{2} \tag{5}$$

The pressure across the plate with the normal velocity $w=E$ and the flight velocity U_0 is, therefore,

$$p_{t=0}=\rho U_0\left(2\cot\theta-\cot\frac{\theta}{2}\right) \tag{6}$$

Integration of this pressure over any section gives the lift coefficient, for angle of attack α of the plate,

$$C_{L_{t=0}}=\frac{\pi}{E}\frac{w}{U_0}=\frac{\pi}{E}\alpha \tag{7}$$

with each local center of pressure at the quarter-chord point.

The start of the plane elliptic wing being equivalent to a uniform lengthening of each chord, the true elliptic outline is not preserved. Such a change, however, may be shown to conform very nearly to a change into another, slightly larger, ellipse at all points except those very near the tips. Furthermore, if the wing is assumed to distort in any of a number of ways into a slightly different elliptical plan form, the change of aerodynamic inertia will be found to be but little affected by the change in shape and to depend primarily on the over-all change in size. Each such distortion can be thought of as representing a certain distribution of the starting velocity U around the edge of the wing. Equation (5) is exact for all distortions of this class. Inasmuch as they may be made to fall on either side of the distortion represented by U=constant (representing the start of the rigid wing), the equation is also considered applicable to this case.

THE DOWNWASH CORRECTION

A reasonably accurate curve of the growth of lift might now be drawn by connecting the starting value

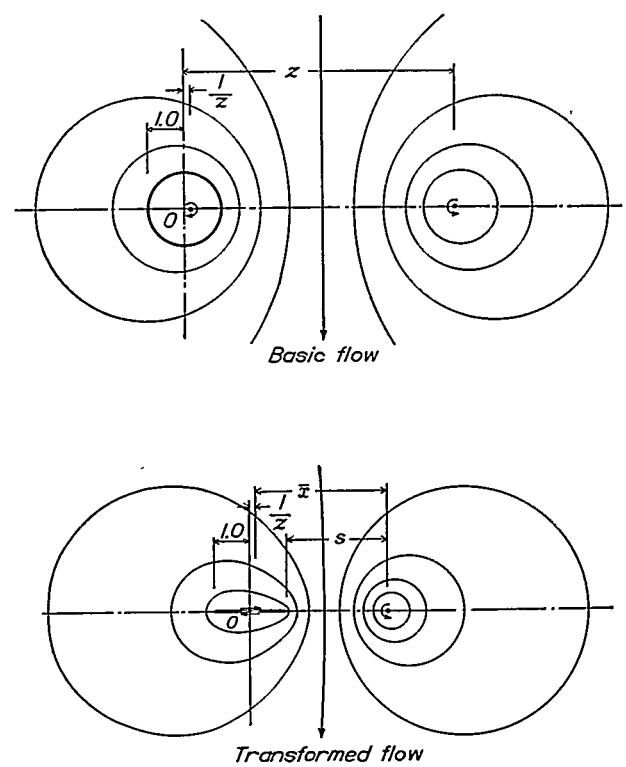

FIGURE 3.—Element of circulatory flow.

(equation (7)) asymptotically to the known steady value given by the Prandtl theory. Calculations have

shown, however, that, after the wing has progressed a distance of the order of one semispan, the effect of finite width of the wake can be treated simply as a modification of the angle of attack of the entire wing, as in the steady-lift theory. A closer approach to the true form of the curve may be obtained by proceeding on this basis.

Before the three-dimensional problem is considered, it will be helpful to review certain aspects of the two-dimensional theory (reference 1). In order to make the analysis nondimensional, all velocities are expressed in terms of the flight velocity U_0 and all lengths, in terms of the half chord.

Figure 3 shows the elementary two-dimensional flow used as a starting point by Wagner (reference 1). This flow is caused by two vortices, representing, respectively, an element of circulation around the wing and the vortex left in the wake when this circulation originated. The streamlines of this flow are eccentric circles. One such circle (of unit radius) is chosen to represent the wing section and the axes are so placed that this circle has its center at the origin. The geometry of the resulting pattern is such that, when the wake vortex is at z, the wing vortex will be at $1/z$. This spacing preserves the unit circle as a streamline of the flow.

Transformation of the pattern by the formula

$$2\zeta=z+\frac{1}{z} \tag{8}$$

flattens the unit circle into a thin-line wing section and distorts the originally circular streamlines into oval Joukowski figures. The transformed pattern thus represents the circulatory flow around a flat wing section with an associated countervortex in the wake. In the transformation, the centroid of wing vorticity remains at the position of the original bound vortex while the wake vortex is shifted forward somewhat as shown (fig. 3).

Each elementary flow of the type shown contributes a certain velocity around the trailing edge of the airfoil. The flow due to an instantaneous change of angle of attack of the airfoil may be superposed on these flows and will contribute a trailing-edge velocity of opposite sense. On this basis, the problem of circulation with varying angle of attack may be solved by an inverse procedure. Assume some convenient distribution of wake vorticity and calculate (by integration) the trailing-edge velocity at each point along the flight path corresponding to the prescribed wake. The particular variation of angle of attack necessary to cancel this trailing-edge flow at each instant (Kutta condition) can then be determined. If a number of such curves are found, they may be added in various ratios so as to approximate some prescribed variation of angle of attack; the corresponding circulation curves are added in like ratios.

In essentially the manner described, Wagner (reference 1) calculated the two-dimensional flow around a wing section following a sudden unit change in angle of attack. The integrated pressures over the airfoil give a lift coefficient that asymptotically approaches the known steady value 2π; whereas the starting lift coefficient is found to be exactly one-half this value. The center of pressure remains at the quarter-chord point throughout the motion.

In the case of the finite wing, an element of the wake will be as depicted in figure 3 but will, in addition, contain vortices completing each circuit to the wing through the tips. The length of the tip vortices may be approximated by assuming that they extend to the chordwise centroid of the wing circulation. After some

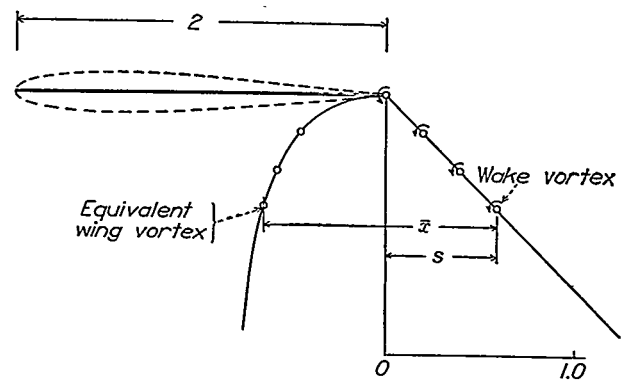

FIGURE 4.—Position of the centroid of discontinuity in the wing for different positions of the wake vortex.

calculation, the equivalent length $\bar{x}$ of the tip vortices in terms of the distance traveled s reduces to

$$\bar{x}=\sqrt{s(s+2)} \tag{9}$$

Figure 4 illustrates the rapid travel of the centroid of discontinuity within the wing subsequent to its initial position at the trailing edge.[1] It is seen that, after a travel of several chord lengths, the centroid may be taken at the middle of the wing section. This assumption will later be used.

Figure 5 shows how an elementary loop vortex in the wake of a finite wing can be formed by cancelation from an element of the wake of an infinite wing. The downwash induced by segments CD and FH accounts for the aspect-ratio effect. Since a uniform distribution of the downwash flow is assumed, the calculations will be restricted to the center of the wing. By the application of Biot-Savart's rule, the downwash velocity due to elements CD and FH is found to be

$$\frac{1}{2\pi}\left[\left(\frac{x}{y}+\frac{y}{x}\right)\frac{1}{\sqrt{x^2+y^2}}-\frac{1}{x}\right] \tag{10}$$

This expression for downwash may be integrated in

[1] At $s=0$, the tip vortices are lengthening at an infinite rate and, although the vortex strength is zero at the beginning of the motion, the limiting calculation shows that the induced downwash flow has a certain rate of acceleration at this instant. As a result, the starting lift of the finite wing is diminished, in accordance with the result of the previous calculation.

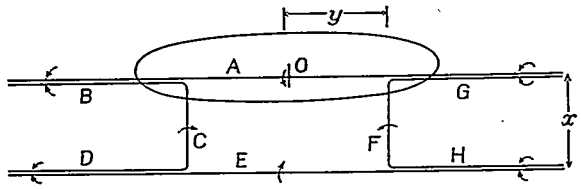

FIGURE 5.—Superposition of vortices to obtain finite loop.

the case of elliptic spanwise loading. Let γ represent the circulation around any chordwise section; then

$$\gamma=\Gamma \sin \theta \tag{11}$$

where $y=\frac{b}{2}\cos\theta$, and Γ is the value of γ at the center section.

$$y^2+x^2=\left(\frac{b}{2}\right)^2\left[1+\left(\frac{x}{b/2}\right)^2\right](1-k^2\sin^2\theta) \tag{12}$$

where $k^2=\dfrac{1}{1+\left(\dfrac{x}{b/2}\right)^2}$

Then the induced velocity due to a series of finite loops of the form CEF (fig. 5) is given by

$$\frac{\Gamma}{\pi b}\int_0^{\pi/2}\left(\frac{x}{\frac{b}{2}\sqrt{1+\left(\frac{x}{b/2}\right)^2}}+\frac{b/2\cos^2\theta}{x\sqrt{1+\left(\frac{x}{b/2}\right)^2}}\right)\frac{d\theta}{\sqrt{1-k^2\sin^2\theta}}$$

$$=\frac{\Gamma}{\pi b}\frac{1}{\sqrt{1+\left(\frac{x}{b/2}\right)^2}}\int_0^{\pi/2}\left(\frac{x}{b/2}+\frac{b/2}{x}\cos^2\theta\right)\frac{d\theta}{\sqrt{1-k^2\sin^2\theta}}$$

$$=\frac{\Gamma}{\pi b}\left\{\frac{x}{b/2}kK(k)+\frac{b/2}{x}\left[K(k)\left(k-\frac{1}{k}\right)+\frac{E(k)}{k}\right]\right\} \tag{13}$$

where $K(k)$ and $E(k)$ are the complete elliptic integrals. (See Peirce's table.)

Subtracting the two-dimensional vortex E gives the effect of a series of segments of the form of DC and FH, distributed along the span according to the elliptic loading.

$$\frac{dw}{d\Gamma}=w_\Gamma=\frac{1}{\pi b}\left\{\frac{x}{b/2}kK(k)+\frac{b/2}{x}\left[\left(k+\frac{1}{k}\right)K(k)+\frac{1}{k}E(k)-1\right]\right\} \tag{14}$$

Figure 6 shows the variation of downwash velocity with increasing length of the wake as determined by this formula. Some additional rough calculations have shown that the downwash becomes practically uniform over the entire wing before the wake has attained a length of one semispan.

Figure 7 shows downwash curves derived from equation (14) for elliptic wings of aspect ratios A of 3 and 6. In this derivation, the unit of length was taken as half the central chord of the wing. Thus, the wings have the same chords ($c_{max}=2$) but are of different spans. In

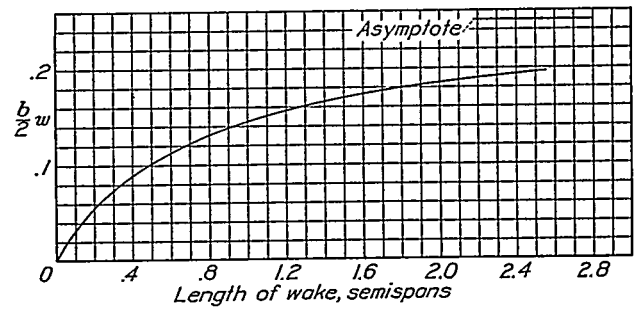

FIGURE 6.—Growth of downwash with increasing length of the wake. $\Gamma_0=1.0$; elliptical span load.

order to define the later portions of the curve, the wake was assumed to start with length equal to the mean chord b/A in each case. This assumption, though somewhat arbitrary, makes allowance for the curvature of the trailing edges of the wings.

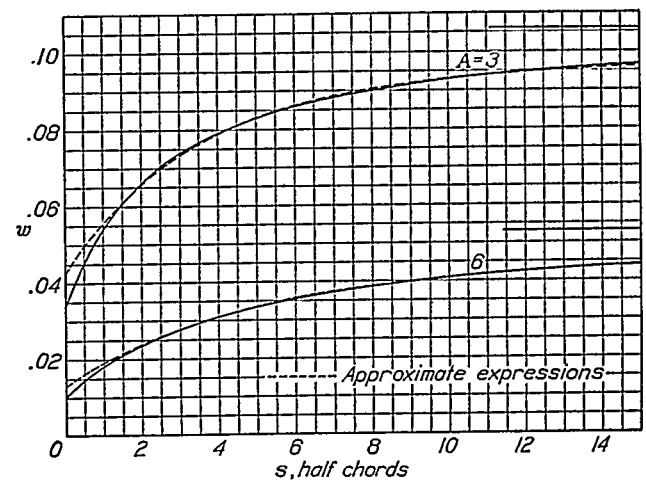

FIGURE 7.—Downwash functions, $w_\Gamma(s)$.

The induced downwash w_i with any variation of circulation $\Gamma(s)$ along the flight path may be determined from the curves given in figure 7 by superposition; thus

$$w_{iw}(s)=w_\Gamma(s)\Gamma_w(0)+\int_0^s w_\Gamma(s-s_0)\Gamma_w'(s_0)ds_0 \tag{15}$$

The growth of circulation following a sudden start of the motion will be determined from the two-dimensional theory by using the effective normal velocity

$$w_e=w-w_i=1-w_i \tag{16}$$

Let Γ_{0w} be the rise of circulation following a sudden start with unit normal velocity as given by the two-dimensional theory. Then, for the finite wing,

$$\Gamma_w(s)=\Gamma_{0w}(s)-\Gamma_{0w}(s)w_i(0)-\int_0^s \Gamma_{0w}(s-s_0)w_i'(s_0)ds_0 \tag{17}$$

The determination of the effective normal velocity and the circulation for the finite wing thus depends on the simultaneous solution of integral equations (15) and (17). This solution may be conveniently obtained by operational methods.

OPERATIONAL SOLUTION OF INTEGRAL EQUATIONS

Let D represent the operator d/ds and let $1=1(s)$ represent the unit jump function, that is, a function of s having the value zero at $s<0$ and having the value 1 at $s>0$. A function of s may be represented by a combination of operations on the unit jump function

$$\Phi(s)=\overline{\Phi}(D)1 \tag{18}$$

The combination of operations $\overline{\Phi}(D)$ necessary to reproduce the function $\Phi(s)$ is called the operational equivalent of the function $\Phi(s)$.

Rules for finding such equivalents are discussed in reference 6. The most general rule for proceeding either from $\overline{\Phi}$ to Φ, or vice versa, is:

$$\overline{\Phi}(a)=a\int_0^\infty \Phi(z)e^{-az}dz$$

$$\Phi(a)=\frac{1}{2\pi i}\int_{-\infty i}^{\infty i}\frac{\overline{\Phi}(z)}{z}e^{az}dz$$

The rule needed in the following development is the Heaviside expansion theorem:

$$\Phi(s)=\overline{\Phi}(D)1=\frac{f(D)}{F(D)}1=\frac{f(0)}{F(0)}+\sum_{\lambda}\frac{f(\lambda)}{\lambda F'(\lambda)}e^{\lambda s} \tag{19}$$

where f and F are algebraic polynomials and the λ's are the roots of $F(\lambda)=0$.

The operational treatment of integral equations is based on the proposition that an integral of the form of (15) may be regarded as the linear superposition of the effects of a succession of small jump functions. The operational form of (15) is

$$\overline{w}_{iw}(D)=\overline{w}_{\Gamma}(D)\overline{\Gamma}_w(D) \tag{20}$$

and that of (17)

$$\overline{\Gamma}_w(D)=\overline{\Gamma}_{0w}(D)[1-\overline{w}_{iw}(D)] \tag{21}$$

Solving algebraically for $\overline{w}_{iw}(D)$:

$$\overline{w}_{iw}(D)=\frac{\overline{w}_{\Gamma}(D)\overline{\Gamma}_{0w}(D)}{1+\overline{w}_{\Gamma}(D)\overline{\Gamma}_{0w}(D)} \tag{22}$$

The induced velocity $w_{iw}(s)$ gives the variation of the effective angle of attack of the finite wing when the geometric angle of attack is held constant. The lift at later stages of the motion is then found by combining the effective angle-of-attack variation

$$w_{ew}(s)=1-w_{iw}(s) \tag{23}$$

with the two-dimensional indicial-lift function given by Wagner. Let $C_{L_{0w}}(s)=C_{L_{0\alpha}}(s)$ be the lift in two-dimensional flow following a sudden unit jump of angle (the curve given by Wagner is for $\alpha=1/2\pi$); then, for the finite wing:

$$C_{L_\alpha}(s)=C_{L_{0\alpha}}(s)-C_{L_{0\alpha}}(s)w_{iw}(0)-\int_0^s C_{L_{0\alpha}}(s-s_0)w_{iw}'(s_0)ds_0 \tag{24}$$

or, in operational form:

$$\overline{C}_{L_\alpha}(D)=\overline{C}_{L_{0\alpha}}(D)-\overline{C}_{L_{0\alpha}}(D)\overline{w}_{iw}(D) \tag{25}$$

Substitution of the expression for $\overline{w}_{iw}(D)$ from equation (22) gives the operational form of the lift function for the finite wing in terms of the known functions

$$w_1(s),\ \Gamma_{0w}(s),\ \text{and}\ C_{L_{0\alpha}}(s)$$

Because no concise expressions of the required functions are known, approximate formulas must be devised. The function $e^{\lambda s}$ has a simple operational equivalent, namely,

$$e^{\lambda s}=\frac{D}{D-\lambda}1 \tag{26}$$

and, since the curves to be fitted are asymptotic in character, series of such functions were chosen as follows:

$$\left.\begin{aligned}\Gamma_{0w}(s)&=5.75-3.75e^{-0.239s}-1.50e^{-1.970s}\\ C_{L_{0\alpha}}(s)&=2\pi-0.330\pi e^{-0.045s}-0.670\pi e^{-0.300s}\\ w_{\Gamma}(s)_{A=3}&=0.096-0.053e^{-0.281s}\\ w_{\Gamma}(s)_{A=6}&=0.045-0.032e^{-0.203s}\end{aligned}\right\} \tag{27}$$

Figures 7 and 8 show the degree of exactness attained with these expressions. It was considered not important to fit the curves accurately near the origin.

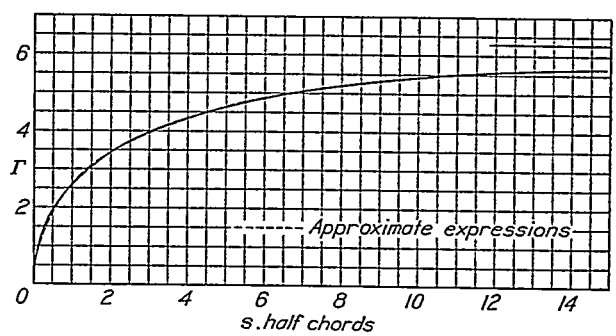

FIGURE 8.—Growth of circulation in two-dimensional flow, $\Gamma_{0w}(s)$.

The operational equivalents $\overline{\Gamma}_{0w}(D)$, $\overline{w}_{iw}(D)$, etc., are easily written down from (26). The substitution of these equivalents into equations (22) and (25) and the evaluation of the resulting operators by the Heaviside expansion theorem are quite lengthy and will not be reproduced. The resulting expressions for $C_{L_\alpha}(s)$ were found to be

$$\left.\begin{aligned}C_{L_{\alpha_{A=3}}}&=\pi[1.288-0.190e^{-0.045s}+0.055e^{-0.300s}\\ &\quad+0.043e^{-2.071s}+0.915e^{-0.293s}\cos 0.095(s-19.135)]\\ C_{L_{\alpha_{A=6}}}&=\pi[1.589-0.242e^{-0.045s}-0.403e^{-0.300s}\\ &\quad+0.008e^{-1.998s}+0.872e^{-0.234s}\cos 0.0724(s-21.117)]\end{aligned}\right\} \tag{28}$$

Because the curves given by these formulas are considered invalid near the start of the motion, new curves having the correct starting values given by equation (7) were drawn in as shown (fig. 9). These final curves have the useful approximate expressions:

$$\left.\begin{aligned}C_{L_{\alpha_{A=3}}}(s)&=1.200\pi(1.000-0.283e^{-0.540s})\\ C_{L_{\alpha_{A=6}}}(s)&=1.48\pi(1.000-0.361e^{-0.381s})\end{aligned}\right\} \tag{29}$$

An analogous expression for infinite aspect ratio is

$$C_{L_{0\alpha}}(s)=2\pi(1.000-0.165e^{-0.045s}-0.335e^{-0.300s}) \quad (30)$$

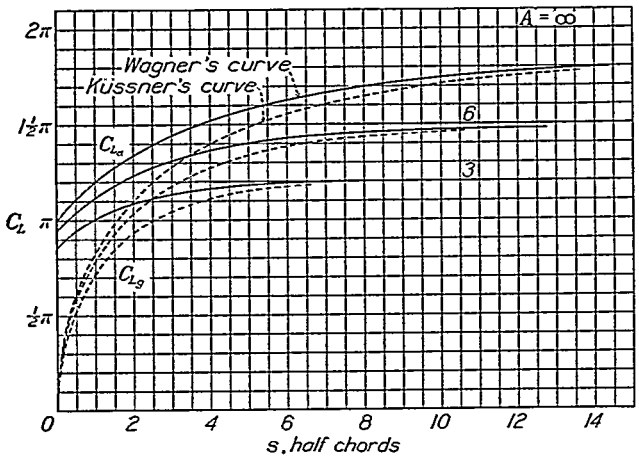

FIGURE 9.—Indicial lift functions, $C_{L_\alpha}(s)$ and $C_{L_q}(s)$.

LIFT IN VARIABLE MOTION

In addition to the lift given by the lift function $C_{L_\alpha}(s)$, the airfoil experiences a reaction equal to the instantaneous rate of change of the normal-velocity component times the virtual additional mass of the wing in normal motion. In coefficient form:

$$\Delta C_{L_{inertia}}=\frac{\pi}{E}\frac{d\alpha}{ds} \quad (31)$$

Furthermore, if the wing is rotating in pitch, the effect of an additional relative camber is introduced. A simple integration, making use of well-known results of thin-airfoil theory, shows

$$\Delta\alpha_{pitching}=l\frac{d\theta}{ds} \quad (32)$$

where the factor l is ½ for a straight rectangular wing. For the elliptic wing, $\frac{1}{2}>l>\frac{\pi}{8}$, approximately, being somewhat smaller than ½ because the rotation introduces a smaller relative camber at the narrower sections toward the tip.

The effects of combined vertical motion $\left(\alpha=\frac{w}{U_0}\right)$ and rotation ($\alpha=\theta$) may be conveniently treated by the use of moving axes as shown in figure 10. With these points in mind, the following operational formula for the total lift may be derived:

$$C_L(s)=\frac{\pi}{E}D\alpha(s)+C_{L_\alpha}(D)[\alpha(s)+lD\theta(s)] \quad (33)$$

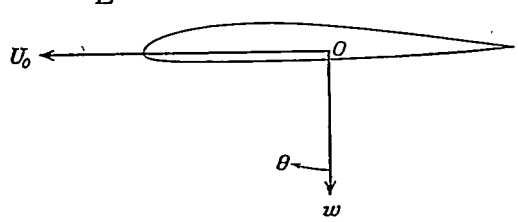

FIGURE 10.—Moving axes, $\alpha=w/U_0$.

LIFT FUNCTIONS FOR AN OSCILLATING AIRFOIL

The lift in sinusoidal motion where

$$\alpha=e^{ins} \text{ and } \theta=0 \quad (34)$$

is given by

$$C_{L_n}(s)=\frac{\pi}{E}in\ e^{ins}+\overline{C}_{L_\alpha}(D)e^{ins} \quad (35)$$

Since

$$e^{ins}=\frac{D}{D-in}1$$

$$\overline{C}_{L_\alpha}(D)e^{ins}=\overline{C}_{L_\alpha}(D)\frac{D}{D-in}1 \quad (36)$$

Expansion of this operator gives, with the exception of transient terms,

$$C_{L_n}(s)=\overline{C}_{L_\alpha}(in)e^{ins} \quad (37)$$

The function $\overline{C}_{L_\alpha}(in)$ corresponds to the lift function $C(n)$ introduced by Theodorsen (reference 2) for the oscillating two-dimensional airfoil, that is, in Theodorsen's terminology

$$\overline{C}_{L_\alpha}(in)=2\pi C(n)=2\pi[F(n)+iG(n)] \quad (38)$$

The expressions for $F+iG$ found from the operational equivalents of (29) are:

$$\left.\begin{aligned}(F+iG)_{A=3}&=0.600-0.170\frac{in}{in+0.540}\\(F+iG)_{A=6}&=0.740-0.267\frac{in}{in+0.381}\end{aligned}\right\} \quad (39)$$

Figure 11 shows these functions plotted against the wave length $2\pi/n$ of the oscillation.

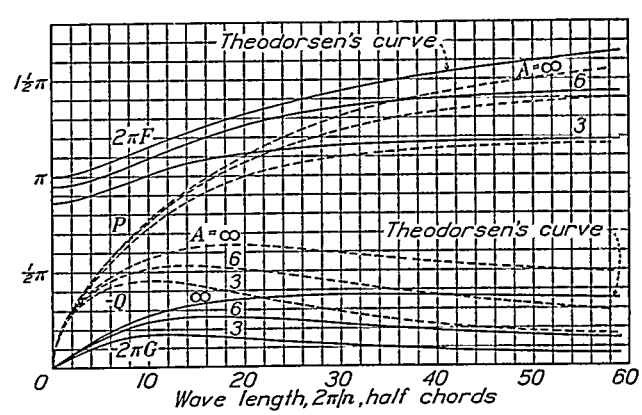

FIGURE 11.—Oscillating-lift functions, $\overline{C}_{L_\alpha}(in)=2\pi(F+iG)$ and $\overline{C}_{L_q}(in)=P+iQ$.

Relation (37) is especially interesting (see reference 7) because it shows a connection between the Fourier and the operational analyses. Thus, if the response of a linear system to a continuous sinusoidal excitation is known,

$$R_n(s)=f(in)e^{ins} \quad (40)$$

then, the function f immediately furnishes the opera-

tional equivalent of the unit response so that, for any variable excitation $z(s)$,

$$R(s)=f(D)z(s)=f(D)\bar{z}(D)\,1 \tag{41}$$

LIFT IN GUSTS

The foregoing calculations provide the basis for the determination of lift under any prescribed conditions of motion of the wing. These results may also be used in conjunction with the equations given by Theodorsen (reference 2) to predict the air forces on wings with hinged flaps.

In all cases treated, the airfoil has been considered as moving in air that would otherwise be at rest. Another problem of considerable interest is the prediction of lift during passage of the airfoil through gusts. The two-dimensional theory for this case was developed by Küssner (reference 3) and has since been corrected in certain details by von Kármán and Sears (reference 8).

The basic solution required in the gust problem is the solution for a unit sharp-edge gust of uniform upward velocity. In order to obtain this solution, it is useful to substitute for the change in direction of the relative air velocity an equivalent fictitious bending of the airfoil in still air such that it has at every point an angle of attack equal to the angle that would otherwise be produced by the gust.

The effect of a bend progressing along the chord of the airfoil may be calculated by thin-airfoil theory (reference 9, chs. III and IV). A part of the effect appears as a change in angle of attack of the airfoil as a whole, namely:

$$\Delta\alpha_g=1-\frac{\cos^{-1}(s-1)+\sqrt{s(2-s)}}{\pi} \tag{42}$$

The corresponding part of the lift is obtained from the indicial-lift function $C_{L_\alpha}(s)$ by superposition. In addition, a reaction caused by acceleration of the noncirculatory potential flow exists during the time the airfoil is partly immersed in the gust. In two-dimensional flow, the additional reaction is

$$\Delta C_{L_g}=2\sqrt{s(2-s)} \tag{43}$$

No corresponding expression for the finite wing is known, but it may be reasoned that the maximum correction will be no greater than that indicated by the inertia factor of the rigid elliptic disk, $1/E$. Hence, the formula

$$\Delta C_{L_g}=\frac{2}{E}\sqrt{s(2-s)} \tag{44}$$

was used for the finite wings as an approximation.

The consideration of wings with curvature or sweepback introduces another difficulty into the analysis, since the sections of such wings will not strike the edge of the gust simultaneously. It is obviously impractical to attempt to include in the analysis the effects of the many possible variations of plan form, and the calculations were therefore made on the assumption that all sections entered the gust simultaneously. Such an analysis may be considered sufficiently exact for the usual variations of plan form but is, of course, not applicable to wings with considerable sweep.

Figure 9 shows the functions, designated $C_{L_g}(s)$, thus calculated. These curves have the useful approximate expressions:

$$\left.\begin{aligned}
C_{L_g}(s)_{A=3}&=1.200\pi(1.000-0.679e^{-0.558s}-0.227e^{-3.20s})\\
C_{L_g}(s)_{A=6}&=1.500\pi(1.000-0.448e^{-0.290s}\\
&\qquad\qquad -0.272e^{-0.725s}-0.193e^{-3.00s})\\
C_{L_g}(s)_{A=\infty}&=2.000\pi(1.000-0.236e^{-0.058s}\\
&\qquad\qquad -0.513e^{-0.364s}-0.171e^{-2.42s})
\end{aligned}\right\} \tag{45}$$

As in the case of the functions $C_{L_\alpha}(s)$, the exponential forms were used to give simple operational equivalents. The operational equivalents of the indicial-gust functions, $\bar{C}_{L_g}$, give directly functions determining the alternating lift of a stationary wing in an oscillating air stream. Thus

$$C_L(s)=\bar{C}_{L_g}(in)e^{ins}=[P(n)+iQ(n)]e^{ins} \tag{46}$$

Figure 11 shows these functions in comparison with the corresponding functions for the oscillating airfoil.

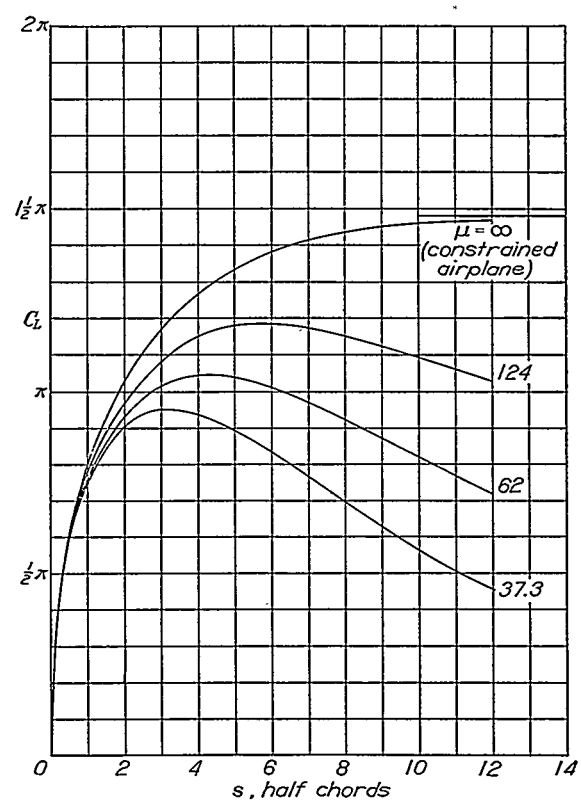

FIGURE 12.—Variation of the lift during passage through unit sharp-edge gust. $A=6$.

MOTION OF AIRPLANE IN GUST

In most problems that arise in practice, the motion of the airfoil, or airplane, will not be prescribed beforehand but must be determined from dynamical equations. The rising motion of an airplane (or, as it shall

be considered here, a loaded wing) while entering a sharp-edge gust presents such a problem and will be used to illustrate the application of the operational formulas.

The dynamical equation for this case (neglecting pitching motion) is:

$$m\frac{dw}{dt}+\text{resisting force}=\text{impressed force} \tag{47}$$

where the impressed force is that part of the lift caused by the gust. Since

$$\frac{dw}{dt}=\frac{U_0^2}{c/2}\frac{d\alpha}{ds}$$

$$m\frac{dw}{dt}=\frac{2m}{S\frac{\rho}{2}c}s\frac{\rho}{2}\frac{c}{2}\frac{U_0^2}{c/2}\frac{d\alpha}{ds}=\mu s\frac{\rho}{2}U_0^2\frac{d\alpha}{ds} \tag{48}$$

where $\mu=\frac{2m}{S\frac{\rho}{2}c}$. In coefficient form,

$$\mu D\alpha+\overline{C}_{L_\alpha}(D)\alpha=\overline{C}_{L_g}(D)\alpha_g \tag{49}$$

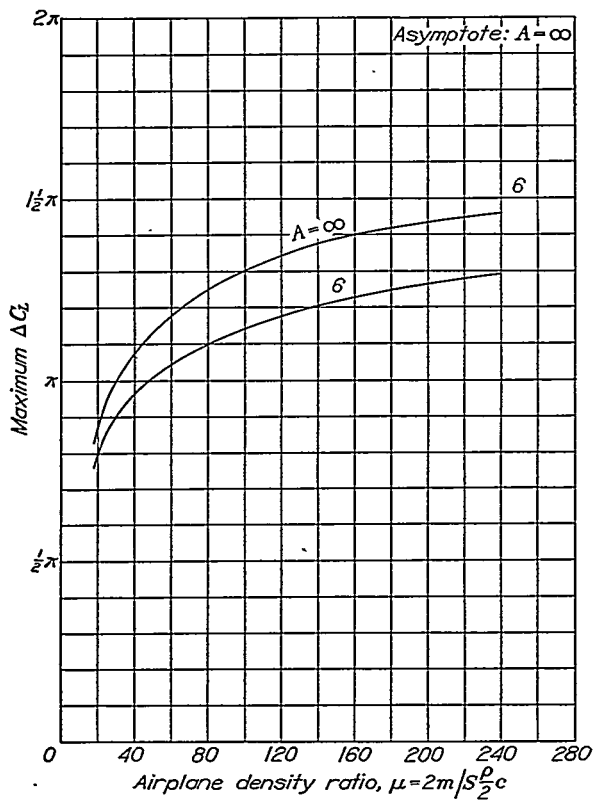

FIGURE 13.—Maximum-lift increments developed in flying through a unit sharp-edge gust.

where α_g is the change in angle of attack represented by the gust.

For a unit sharp-edge gust, $\alpha_g=1$; then (solving for α),

$$\alpha(s)=\frac{\overline{C}_{L_g}(D)}{\mu D+\overline{C}_{L_\alpha}(D)}1 \tag{50}$$

By the use of the approximate expressions given for C_{L_α} and C_{L_g} (equations (29) and (45)), this operator may be reduced to the form (19).

Figure 12 shows the lift coefficient $C_L(s)=\mu D\alpha(s)$ computed from equation (50) for several values of the density ratio μ and for $A=6$. Figure 13, derived from similar calculations, gives maximum lift loads attained in the sharp-edge gust as functions of the relative density.

LANGLEY MEMORIAL AERONAUTICAL LABORATORY,
NATIONAL ADVISORY COMMITTEE FOR AERONAUTICS,
LANGLEY FIELD, VA., *June 15, 1939.*

REFERENCES

1. Wagner, Herbert: Über die Entstehung des dynamischen Auftriebes von Tragflügeln. Z. f. a. M. M., Bd. 5, Heft 1 Feb. 1925, S. 17–35.
2. Theodorsen, Theodore: General Theory of Aerodynamic Instability and the Mechanism of Flutter. T. R. No. 496, N. A. C. A., 1935.
3. Küssner, H. G.: Zusammenfassender Bericht über den instationären Auftrieb von Flügeln. Luftfahrtforschung, Bd. 13, Nr. 12, 20. Dec. 1936, S. 410–424.
4. Jones, Robert T.: The Unsteady Lift of a Finite Wing. T. N. No. 682, N. A. C. A., 1939.
5. Jones, Robert T.: Operational Treatment of the Nonuniform-Lift Theory in Airplane Dynamics. T. N. No. 667, N. A. C. A., 1938.
6. Jeffreys, Harold: Operational Methods in Mathematical Physics. Cambridge Tracts in Math. and Phys. No. 23, Cambridge Univ. Press, 1927.
7. Garrick, I. E.: On Some Reciprocal Relations in the Theory of Nonstationary Flows. T. R. No. 629, N. A. C. A., 1938.
8. von Kármán, Th., and Sears, W. R.: Airfoil Theory for Non-Uniform Motion. Jour. Aero. Sci., vol. 5, no. 10, Aug. 1938, pp. 379–390.
9. Munk, Max M.: Fundamentals of Fluid Dynamics for Aircraft Designers. The Ronald Press Co., 1929.