TECHNICAL NOTES

NATIONAL ADVISORY COMMITTEE FOR AERONAUTICS

No. 756

# THE EFFECT OF PISTON-HEAD SHAPE, CYLINDER-HEAD SHAPE, AND EXHAUST RESTRICTION, ON THE PERFORMANCE OF A PISTON-PORTED TWO-STROKE CYLINDER

By A. R. Rogowski, C. L. Bouchard, and C. Fayette Taylor
Massachusetts Institute of Technology

Washington
March 1940

NASA Technical Library
3 1176 01433 7456

NATIONAL ADVISORY COMMITTEE FOR AERONAUTICS

TECHNICAL NOTE NO. 756

# THE EFFECT OF PISTON-HEAD SHAPE, CYLINDER-HEAD SHAPE, AND EXHAUST RESTRICTION, ON THE PERFORMANCE OF A PISTON-PORTED TWO-STROKE CYLINDER

By A. R. Rogowski, C. L. Bouchard, and C. Fayette Taylor

## SUMMARY

A full-scale, three-dimensional, steady-flow model of the two-stroke engine described in N.A.C.A. Technical Note No. 674 (reference 1), was constructed for the purpose of observing the scavenging-air flow obtained with the various inlet-port arrangements tested in the actual engine. Based on experience gained from correlation of the flow tests with engine tests, several piston-head shapes were developed, and the most promising were tested in the engine. Several modifications of the successful round-edge piston previously used, were also tested. Three types of cylinder head: spherical, cylindrical, and flat in cross section were tried, first in the flow model and then in the engine. The flat head was modified by milling a portion of the surface away to form steps. The cylindrical and modified flat heads were run at various angles to the plane of symmetry.

Piston- and cylinder-head shapes were developed at compression ratio of 7, purely from the standpoint of scavenging, and would not be suited to compression-ignition use without considerable modification.

A flat-top piston, with edge rounded to a 3/4-inch radius was found best. The best cylinder-head shape tried was spherical, with radius nearly the same as that of the cylinder bore.

An investigation was also made of the possibility of producing a supercharging effect by restricting the exhaust ports while using normal piston and cylinder head. A limited amount of supercharging was found possible by this means, but the net gain was small owing to increased pumping loss.

All tests were made over a range of scavenge ratios of 0.8 to 1.6. Spark ignition was used in all engine tests.

This investigation, conducted at the Massachusetts Institute of Technology, was sponsored by, and conducted with financial assistance from, the National Advisory Committee for Aeronautics.

## INTRODUCTION

Previous work with this loop-scavenged, piston-ported engine (reference 1) disclosed that with suitable inlet-port shape and arrangement, it was possible to reach approximately 85 percent of the maximum attainable scavenging efficiency with a scavenge ratio of 1.4 and an inlet pressure of 12.8 inch of Hg above atmosphere.

The main purpose of the present investigation was to determine whether the scavenging of this engine could be improved by the use of special piston-head or cylinder-head shapes. An investigation of this sort seemed desirable, since any improvement gained in this manner could be had without losing any of the inherent simplicity of this type of engine.

It was considered likely that, although the backward sloping inlet ports shown in figure 2 were quite effective in directing the scavenging flow, a special piston shape might be of value in keeping a more definite boundary between the upward-moving fresh charge, and the downward-moving exhaust products.

In the previous tests, many modifications of the best port arrangements were made, without obtaining any definite improvement in scavenging. It was felt that observations of flow in a model might indicate some unscavenged pocket, or some other peculiarity of flow which was preventing further improvement. A directing surface on piston or cylinder head could then be added to eliminate the faulty flow. If, on the other hand, no peculiarities were evident, then the piston or cylinder head could perhaps be designed to accentuate the type of flow present in the best port arrangements. Finally, the flow model might indicate whether swirl were present and, if so, whether it could be controlled. Tests on the engine would indicate whether swirl was beneficial or adverse to good scavenging efficiency.

## DESCRIPTION OF APPARATUS

Engine.- The engine used for this work is shown in figure 1, and is the one described in detail in reference 1. Briefly, it is a single-cylinder, piston-ported, two-stroke engine, or 4-1/2-inch bore and 6-inch stroke. The engine consists of an outer barrel, into which a longitudinally split cylinder sleeve fits. One half of this sleeve contains the inlet ports, the other half contains the exhaust ports. The port timing may be varied by sliding one or the other of the halves up or down in the outer barrel, and locking it in the desired position. The vertical cross section of any of the ports may be changed by means of removable inserts. The cylinder head is similar to an inverted piston which extends out of the cylinder bore, and includes a flange for bolting it in position. The compression ratio may be changed by sliding the head up or down in the cylinder. The inlet and exhaust passages are partially contained in the outer barrel. Figure 1 shows some of the constructional details, figure 2 is a horizontal cross section through the ports and figure 3 shows how the vertical cross sections of the ports may be modified by inserts. The shape of the ports in the horizontal plane, as shown in figure 2, was adapted from the arrangements recommended in references 2 and 3.

Figures 4 and 5 show the test set-up which is fully described in reference 1. It will be noted that air and illuminating gas are supplied to the engine by separate blowers, with provision for measuring the quantities of each. Surge tanks on both inlet and outlet are used for the prevention of unwanted dynamic effects. As in the work reported in reference 1, illuminating gas was chosen as a fuel to insure homogeneity of the charge, and freedom from injection problems, so that scavenging efficiency could be evaluated directly from the engine output at a given scavenge ratio.

Pistons and cylinder heads were made of aluminum alloys. The two piston tops developed from the flow model were cast integral with the piston. The domed tops were bolted to a flat piston head. The upper part of the cylinder head consisted of a flange, to which the various head shapes could be quickly bolted. The lower head parts were water-cooled and contained the ring grooves. Figures 6, 6a, and 7 show the various piston-head shapes tested, and figures 8 and 9 show the principal cylinder-head shapes.

Flow model.- The flow model shown in figure 10 was carefully made to the same internal dimensions as the actual engine. The model includes inlet passage, ports, cylinder, cylinder head and piston. Walls of the inlet passage, and the cylinder barrel, with the exception of the port ring, are made of a transparent plastic material with polished surfaces. It is thus possible to observe the entire interior of the cylinder. The piston and cylinder head can be moved axially in the cylinder, and are held airtight and in position by means of expanding rubber rings. The "port timing," that is, the position of inlet and exhaust ports relative to the piston, to the inlet manifold, and relative to each other, can be changed by moving the cylinder and port ring vertically with respect to the manifolds, and transferring flat inserts from the top or the bottom of the exhaust ports at the same time.

In order to observe the air flow, a circular wire frame was made, across which were stretched six fine piano wires, as shown in figures 10 and 11. Small glass beads were threaded on the piano wire and spaced with hypodermic tubing. A rubber thread 0.01 inch in diameter and 1/8 inch long was cemented to each bead, and a fine tuft of cotton attached to the other end of the thread. The frame contained a total of 48 tufts which could rotate freely with the bead as a bearing and follow the air flow in a plane perpendicular to the wire. The flexibility of the fine rubber thread also permitted the tuft to follow components of the air motion parallel to the wire. By means of this frame, the direction of the air flow at any number of horizontal sections of the cylinder could be observed. The tufts were small and light enough, so that their effect on the flow was apparently negligible. Air was supplied to the inlet manifold by a small Sirrocco fan. The static pressure in the inlet passage was held constant for all runs at 0.6 inch alcohol. This pressure was sufficient to give a well-defined flow pattern, but not enough to damage the flow frame. Some use was also made of frames giving vertical cross sections of the flow, but the results from these were not as easy to interpret.

## TEST PROCEDURE

Flow model tests.- Preliminary studies were made with the flow model, using various air velocities, piston positions and port timings, in order to determine whether

these variables had a noticeable effect on the type of flow obtained with a given port arrangement. It was found that port timing did not affect the flow. Air velocities between a flow sufficient to give a definite indication with the cotton tufts and one sufficient to destroy the tufts, were investigated, with the conclusion that the type of flow did not change over this range. The type of flow was found to be unaffected by piston position, except in the case where the ports were just uncovered.

All flow-model runs were therefore made under the following conditions:

1. Port timing of 52° - 55° before bottom center for inlet and 65° before bottom center for exhaust. This was the timing found best in the engine (reference 1).

2. Constant inlet pressure of 0.6 inch alcohol, which resulted in moderate air velocity in the flow model.

3. Piston position 20° before bottom center.

The flow was explored and plotted at 0, 1/2, and 1 inch above the piston and at every inch thereafter to the top of the cylinder. Typical plots are shown in figures 12, 13, and 14. The length of the arrows in these plots indicates the relative horizontal component of the flow direction. The relative magnitude of the vertical component of the flow direction is indicated approximately by the shading, a dark shading indicating a large vertical component. Two arrows at one point indicate a fluctuation of the horizontal flow direction within the angle included between the arrows. A dot indicates upward flow with no horizontal component. A cross indicates downward flow with no horizontal component. Arrows with crosses at the tail indicate a downward vertical component. Plain arrows indicate an upward vertical component. Small circles indicate stagnant or indefinite flow. The boundary between regions of up-and-down flow is indicated approximately, by means of a dot-dash line.

Engine test procedure.- Tests with the engine were made under the following conditions:

1. Engine speed -- 1,800 rpm.

2. Compression ratio -- 7.

3. Fuel-air ratio ----- 0.227 by volume.

4. Ignition timing ---- 13° BTC.

5. Port timing -------- (Same as for the flow model) 52° - 55° BBC for inlet and 65° BBC for exhaust. (See fig. 3a.)

Other timings were investigated (see fig. 18) with several of the various combinations of porting, piston, and cylinder head, but in each case optimum timing was found to be the above. This timing was therefore adopted as standard for the engine tests.

6. Port arrangement -- (see table I). Various port arrangements were tried whenever indicated as desirable by the flow studies or by other considerations, but usually the "E" arrangement was found best.

7. Scavenging ratio -- 0.8 to 1.6.

The various combinations of piston, cylinder head, and inlet ports tested in the engine are shown in table III.

## DEFINITIONS

"Scavenging Ratio," as defined in reference 1, is the ratio of the volume of charge at inlet density passing through the engine cylinder per stroke, to the displacement of the cylinder.

"Scavenging Efficiency" is the ratio of the weight of fresh charge retained in the cylinder, per stroke, to the product of total cylinder volume and inlet density. Inlet density was taken at 75° F and 29.92 inches Hg in every case. Since the indicated mean effective pressure of the engine, with a given fuel-air ratio and compression ratio, is proportional to the weight of fresh charge retained per stroke, the indicated mean pressure is a measure of the scavenging efficiency. The friction mean effective pressure was nearly constant at about 14 pounds per square inch. This value is small enough so that the

"gross" brake mean effective pressure may also be used as a measure of scavenging efficiency. This quantity, defined as the brake mean effective pressure calculated from the dynamometer brake load, is plotted herewith for all engine tests.

"Net brake mean effective pressure" is calculated by assuming 70 percent adiabatic blower efficiency and subtracting the resulting blower mean effective pressure from the engine gross mean effective pressure.

Port shapes.- Various combinations of port inserts were used in both engine and flow model. The inlet-port arrangements used are designated in table I.

Because no inserts were used in the top of the horizontal (0°) ports, they opened about 3° of crank travel before the 30°, 45°, or 60° ports.

The height of the exhaust ports was also varied by inserts as shown in figure 3.

Piston-top shapes.- Seven piston-top shapes were tested as follows:

| No. | Name | Figure |
|---|---|---|
| 1 | Deflector | 6 |
| 2 | Deflector | 6a |
| 3 | Flat | 7 |
| 4 | Round edge, 5/8 in. radius | 7 |
| 5 | Domed, sharp edge | 7 |
| 6 | Domed, 3/4 in. radius | 7 |
| 7 | Flat, 3/4 in. radius | 7 |

Pistons 1 and 2 were developed as a result of flow-model tests. The procedure followed in developing these pistons was one of trial and error, in which a clay piston head was gradually modified to obtain the desired result in the flow model. As no definite pockets or flow peculiarities had been noted with the best port arrangements, the objective was an accentuation of the type of

flow obtained with the port arrangements which gave good performance in the engine.

Pistons 3, 4, and 5 have definite corners at the intersection of the head surface and the top land, as may be seen in figure 7. The ports were set to open at the timings given on page 6. With pistons 6 and 7, the ports were raised 0.10 inch to give approximately the same effective port timing. The port area uncovered by the piston is plotted against crank angle before bottom center, for each piston-head shape, in figure 3a.

Cylinder-head shapes.- Six cylinder-head shapes were tested, as follows:

| Designation | Name | Figure |
|---|---|---|
| A | Deep, spherical | 8, 9 |
| B | Shallow, spherical | 8 |
| C | Cylindrical | 8, 9 |
| D | Flat | 8 |
| E | Flat with 7/8-inch step | 8 |
| F | Flat with step across center | 8, 9 |

Although work with engine and flow model had indicated certain flow patterns as being desirable, none of these patterns seemed attainable by means of reasonable changes in the cylinder-head shape alone. For this reason, the flow model was not used to develop the cylinder-head shapes, but instead, they were arbitrarily chosen.

Flat heads modified by means of steps were made with the idea of breaking up the horizontal flow velocity at the top of the cylinder. The cylindrical and F heads were tested with their axes both parallel and perpendicular to the plane of symmetry of the cylinder, in both flow model and engine.

Exhaust restrictions.- Runs were made to determine the effect of restricting the exhaust-port area, on the power output and scavenging pressure. The standard timing, given on page 4, was used, with the spherical

B head, and round-edge piston 4. Exhaust-port inserts similar to the 0° inlet-port inserts were made up in two sizes. When these two inserts were placed in the bottom of the exhaust ports, there remained 13/16 inch for the one and 9/16 inch for the other between the top of the inserts and the top of the exhaust port. (See fig. 3.) With no insert, the distance from piston top to port top at bottom center was about 1.2 inches. Light spring indicator cards were taken to determine the amount of supercharging possible by this method (figs. 15 and 16).

Effect of swirl.- A plate, partially blocking off the inlet ports on one side of the engine, and thus producing a strong swirl, was tried in the flow model and engine. The scavenge ratio was kept the same as without the plate.

## RESULTS AND DISCUSSION

Effect of port arrangement.- The effect of port arrangement on engine performance (with flat piston 3 and shallow spherical head B) was reported in reference 1 and is summarized herewith by figure 17. The corresponding flow patterns as determined in the flow model for the A and E ports (the poorest and the best as determined by engine performance) are shown in figure 12.

Neither port arrangement shows evidence of unscavenged areas or serious flow peculiarities, such as reverse scavenging or violent swirl. It may be noticed that with the E porting, the flow is characterized by a concentration of the upward-flow area to a minimum at about 2 inches above the piston. At this point the upward-moving area occupies about 25 percent of the total cylinder cross section. The upward-flow area subsequently widens out, until it occupies about 40 percent of the cross-sectional area at the 6-inch level. The contraction of the upflow area with the A porting occurs at a higher level and does not expand again.

The "A" ports show much more "short-circuiting" (that is, flow from inlet to exhaust) than the E ports at the lower levels. It seems probable that the "short-circuiting" accounts for the poorer engine performance of the "A" porting. An interesting difference between the two arrangements is in the rotary motion of the charge in the cylinder, which occurs with the "E" ports only. The up-

ward flow, keeping near the wall, twists about 90° by the time it reaches the top of the cylinder; then as the flow turns downward, the twist reverses. The twist occurred in either direction depending on how it started. It is to be emphasized that the net rotation is zero, the result being what amounts to a 90° twist to the top of the inverted "U" of flowing air. There is a marked horizontal flow of air from the region of upward flow into the downward region, all the way up the advancing edge of the upward current. There is no evidence of downflow being picked up by the upflow, however.

The "C" and "D" ports, also good performers in the engine, showed flow characteristics very similar to those of arrangement E, while the "B" port arrangement, a poor performer, gave flow patterns nearly like those of the "A" arrangement.

Pistons.- Pistons 1 and 2 (see figs. 6 and 6a) were developed independently by two investigators, using as a guide the type of flow which was found to be characteristic of the best port arrangements. The process consisted of gradually modifying a clay piston head, until the desired flow was obtained in the flow model. The "B" (0°) ports and spherical B head were used during this work. Particular effort was made to eliminate short-circuiting and eddies. Figure 13 shows the flow obtained in the model with piston 2. The flow with piston 1 was the same, as nearly as could be observed. Owing probably to the symmetry of the piston, the twist in the flow loop is absent. The expansion of the upblast above the 2-inch level was also absent. The use of a deflector surface very close to the inlet ports to control the upblast, was considered, but was not tried because of the resulting restriction to the flow which would require a high scavenging pressure. There is a notable absence of "short-circuiting," which led to the hope of excellent engine performance for these pistons.

The flows obtained with piston 3 (flat) and 4 (nearly flat with edges rounded to 5/8-inch radius) are also shown in figure 13, using the E port arrangement in each case. The general nature of the flow with these two pistons is quite similar, and both show much more "short-circuiting" and "mixing" (that is, flow between the upgoing and downgoing air) than with pistons 2. They also show the "twist" mentioned above.

Engine test of pistons.- Figure 18 shows that the best port timing was substantially the same for pistons 3 and 4. This was found to be the case for the other pistons also, so that all other engine tests on the pistons were made at a fixed port timing, as previously noted.

Figure 19 shows the performance of pistons 1, 2, 3, and 4 in the engine at various scavenging ratios. The small differences in their performance are surprising, in view of the very pronounced differences in the flow (fig. 13) shown in the model. Pistons 1 and 2, which show what would appear to be much better flow in the model, have, respectively, none and only a very slight performance advantage over 4, the rounded-edge piston.

The considerable difference in performance between pistons 3 and 4 is also surprising, in view of the similarity of flow in the model (fig. 13). In comparing these curves, it should be recalled that pistons 1 and 2 were tested with the B ports (0°) while with 3 and 4 the E porting was used. Thus each piston was tested with the most favorable porting.

In view of the good performance of round-edge piston 4, other round-edge pistons, 5, 6, and 7, were tested in the engine, with results as shown in figure 20. Pistons 6 and 7 showed performance about equal to that with 1 and 2, but required slightly higher scavenging pressure.

In order to accommodate the high-domed pistons, the deep spherical A head was used through this part of the work. The action of this head was found to be substantially the same as the shallow spherical B head, so that the results were not affected by this change. The E porting was used on all tests with the rounded pistons.

As may be seen, increasing the radius of the edge of the piston (7) definitely increased the gross and net power about 2 percent at the higher scavenge ratios, but required higher scavenging pressure for a given scavenging ratio. Doming the center of the piston head (6) was of no advantage and required a slight increase in scavenging pressure. Adding a sharp corner to the domed head (5) reduced the power considerably at low scavenge ratios. Apparently the edge of the piston is the important surface, and is much better at the high scavenge ratios when well rounded. Note, however, from figure 19 that the ordinary flat piston with sharp edge is superior at 0.8 scavenge

ratio. At the high scavenge ratios, the flow into the cylinder starts sooner because the higher inlet pressure overcomes the exhaust pressure more quickly; that is, there is less backflow from cylinder into the inlet. This means that the initial scavenging flow, at high scavenge ratios, occurs with the piston nearer the top of the inlet ports. Estimating from the indicator cards, the start of flow would occur with about a 1/4-inch opening at 1.4 scavenge ratio and a 1/2-inch opening with 0.8 scavenge ratio. This difference in inlet shape, at the time flow starts, may account for the above effects.

Cylinder-head shapes.- The six cylinder heads already described were tested in the flow model with piston 4 and ports E with rather inconclusive results. The three most important flow patterns are shown in figure 14. The flow with the deep spherical head A looks much like that with the shallow spherical head B except perhaps for a little less short-circuiting and more eddies. The flat head D has bad eddies at the 2-inch level. The cylindrical head C in both parallel and perpendicular positions showed about the same flow as the deep spherical heads. Heads A, B, C, and D have similar flow at the 4- and 5-inch levels, with the usual 90° twist. It is believed that the flow characteristics of the round-top piston tend to obscure the small effect of the heads, except in the case of the eddies with the flat head. Modifications E and F of the flat-top head resulted in negligible flow changes as compared with flow with the flat head D.

The performance of these heads in the engine is shown in figure 21, which is a comparison of all the cylinder heads tested. A deep spherical A head is seen to be about 2 percent better than the shallow spherical B head, and about 8 percent better than the flat top head D, in both net and gross power. As might be expected, the scavenge pressure for a given scavenge ratio is nearly the same for all the heads. Figure 21 shows the spherical head to be much superior to the cylindrical head in either position. The cylindrical head with axis perpendicular to the plane of symmetry of the ports is about 5 percent better than with axis turned parallel, but is still nearly 7 percent below the performance of the spherical A head. Scavenge ratio has little or no effect on the relative performance of any of the heads except the modified flat heads. With the small step (E), perpendicular to the plane of symmetry, performance is about the same as with the plain flat head, except at 0.8 scavenge ratio where the performance is

poorer by about 7 percent. Moving the step to the center of the head (F) causes the same drop in power at 0.8 scavenge ratio but results in a slight improvement at the higher ratios. Rotating the F head 90° in the cylinder resulted in a reduction in power of 3 percent. (See table III.)

Effect of swirl.- To determine the effect of actual swirl in the cylinder, the flow model was set up with a flat-top piston, B head, and E porting, but with one entrance to the inlet passage blocked off, so that a large proportion of the scavenging air entered the cylinder through the ports on one side. This resulted in a violent swirl with the area of upward flow rotating 180° in the cylinder by the time it reached the cylinder head. The downward blast from the top remained on the inlet side until reaching the 3-inch level where it crowded the main part of the upward blast to the side of the cylinder 90° from the inlet, and quickly crossed the center of the cylinder to leave by the exit ports. The same arrangement in the engine resulted in a loss of 9 percent in gross, and 15 percent in net power at a scavenge ratio of 1.4. (See table III.)

Exhaust restrictions.- Figure 22 gives engine performance with exhaust ports restricted by the introduction of inserts at the bottom of each port. As shown in figure 3, the first set reduced the height of the ports to 13/16 inch, the second set reduced it to 9/16 inch. With no inserts, the distance from the piston edge to the top of the exhaust port was about 1.2 inches. Normal port timing, E porting, spherical head B, and round-edge piston 4 were used throughout. An increase of gross power of about 3 percent was realized with the moderate restriction and 10 percent with the severe restriction. The increase in scavenge pressure, however, caused the net powers to be nearly the same. An increase of only 2-1/2 percent in net power was realized with the severe restriction, with a 58-percent increase in scavenge pressure. By comparing the indicated power with the pressure in the cylinder at the time the ports close, we may estimate how much of the increased power is due to a supercharging effect and how much to improved scavenging. This was done by measuring the indicator cards taken during these runs. Two of the cards are shown in figures 15 and 16. Since a certain amount of supercharging was realized in these tests, the definition of scavenging efficiency as used in reference 1 and in this work does not indicate the relative excel-

lence of scavenge in this case, as the fresh charge is trapped in the cylinder at various pressures depending upon the amount of exhaust restriction. With a constant volume fraction of fresh charge in the cylinder, therefore, various values of mean effective pressure could be obtained. Column 4 of table II gives the ratio of indicated mean effective pressure to pressure in the cylinder at the close of the ports. This number should be a good indication of the thoroughness of the scavenging process under these conditions. Table II shows no loss in scavenging with moderate exhaust restriction, but a drop of about 9 percent at the high restriction. This difference is due probably to the increased tendency of the exhaust gases to recirculate in the cylinder when the exhaust ports are restricted.

The indicator diagrams show that the tendency of the exhaust gases to flow back into the inlet system is only slightly affected by exhaust restrictions, because the inlet pressure necessary for constant scavenge ratio happens to be enough higher in the restricted cases, so that the elapsed time between the opening of the inlet ports and the equalization of inlet and cylinder pressures remains nearly constant. The differences between inlet pressures and cylinder pressures at the moment the port opens is also nearly constant at about 33 pounds per square inch. The exact figures are shown in table II. The variation in these figures is almost within the error of the indicator.

## CONCLUSIONS

1. The steady-flow model is not a complete indicator of results to be expected in the engine.

2. When used with the E porting (see table I), pistons with well rounded edges but flat at the center of the head are somewhat superior to other types tested, at scavenge ratios over 1.0. Below this figure, the flat-top piston is best.

3. Pistons with a "deflector" top proved best when used with B (horizontal) inlet porting. Under these conditions, the "deflector" pistons were slightly inferior to the best round-edge piston with the E porting.

4. The deep spherical cylinder head A is superior to the other head types tried.

5. The relative scavenging efficiencies of various piston- and cylinder-head shapes are little affected by scavenge ratio, above a scavenge ratio of 1.0.

6. It appears from a limited number of tests that the best port timing is not affected by piston or head shapes.

7. Within the range of scavenge ratios investigated, the difference in net power between the best and worst piston tested was within 12 percent. The difference in net power between the best and worst cylinder head tested was within 25 percent. The most suitable port arrangement was used in all cases.

8. Swirl produced by partially blocking off the inlet ports on one side of the engine was detrimental to performance.

9. Some supercharging was obtained by reducing the height of the exhaust ports without changing their time of opening or closing, but only a small increase in net power was obtained in this way. Scavenging efficiency was reduced by excessive exhaust restrictions of this type.

Massachusetts Institute of Technology,
Cambridge, Mass., December 1939.

## REFERENCES

1. Rogowski, A. R., and Bouchard, C. L.: Scavenging a Piston-Ported Two-Stroke Cylinder. T.N. No. 674, N.A.C.A., 1938.

2. Anon.: The Scavenging of Two-Cycle Engines. Sulzer Tech. Review, no. 4, 1938.

3. Curtis, Charles G.: Improvement in Scavenging and Supercharging Two-Cycle Diesel Engines. Diesel Power, vol. II, no. 9, Sept. 1933, pp. 545-549.

4. Taylor, E. S., and Draper, C. S.: A New High-Speed Engine Indicator. Mech. Eng., vol. 55, March 1933, pp. 169-171.

Table I. Inlet Ports

| Port | 1 | 2 | 3 | 4 | 4 | 3 | 2 | 1 |
|---|---|---|---|---|---|---|---|---|
| A | 45° | 45° | 45° | 45° | 45° | 45° | 45° | 45° |
| B | 0° | 0° | 0° | 0° | 0° | 0° | 0° | 0° |
| C | 0° | 30° | 45° | 60° | 60° | 45° | 30° | 0° |
| D | 0* | 0* | 0° | 60° | 60° | 0° | 0* | 0* |
| E | 0* | 0* | 0* | 60° | 60° | 0* | 0* | 0* |

*Ports open 3° earlier than other ports in the group.

Table II. Runs with Restricted Exhaust Ports

| 1 | 2 | 3 | 4 | 5 | 6 | 7 | 8 |
|---|---|---|---|---|---|---|---|
| Exhaust port height (in.) | imep | Pressure in cylinder at close of ports $P_1$* (lb/sq in.abs) | $\frac{\text{imep}}{P_1}$ | Scavenging pressure gage (lb/sq in.) | Cylinder pressure as inlet port opens (lb/sq in.) | Max-imum (6-5) | Crank angle during inlet blowback |
| 1.2 (open) | 108 | 21.7 | 4.98 | 6 | 37 | 31 | 18° |
| 13/16 | 111 | 22.2 | 5.00 | 7 | 40 | 33 | 19° |
| 9/16 | 117 | 25.7 | 4.55 | 10 | 43 | 33 | 19° |

*Cylinder pressures were taken with the M.I.T. engine indicator (reference 4).

Table III. Performance at 1.4 Scavenge Ratio

| Piston | Cylinder head | Inlet-port arrangement | bmep (from curves) Gross | bmep (from curves) Net | Scavenge pressure in. Hg | Figure | Remarks |
|---|---|---|---|---|---|---|---|
| 3 | B | E | 89.8 | 80.5 | 10 | 19 | Piston heads |
| 4 | B | E | 93.2 | 83.0 | 11.9 | 19 | |
| 1 | B | B | 93.2 | 83.0 | 11.9 | 19 | |
| 2 | B | B | 95.0 | 84.0 | 12.7 | 19 | |
| 4 | A | E | 94.7 | 84.0 | 12.0 | 20 | Rounded piston heads |
| 5 | A | E | 94.7 | 83.6 | 12.8 | 20 | |
| 6 | A | E | 96.5 | 83.6 | 14.4 | 20 | |
| 7 | A | E | 96.5 | 85.5 | 13.4 | 20 | |
| 4 | A | E | 94.8 | 84.3 | 12.0 | 21 | Cylinder heads |
| 4 | B | E | 93.4 | 82.6 | 12.0 | 21 | |
| 4 | D | E | 87.5 | 77.8 | 11.6 | 21 | |
| 4 | A | E | 94.5 | 84.0 | 12.0 | 21 | Cylindrical cylinder heads |
| 4 | C | E | 88.2 | 77.7 | 11.8 | 21 | |
| 4 | C | E | 84.3 | 74.0 | 11.2 | 21 | |
| 4 | A | E | 94.6 | 84.0 | 12.0 | 21 | Flat cylinder heads |
| 4 | D | E | 87.5 | 77.5 | 11.8 | 21 | |
| 4 | E | E | 88.0 | 77.7 | 11.8 | 21 | |
| 4 | F | E | 89.5 | 79.2 | 11.8 | 21 | |
| 4 | F | E | 86.8 | 76.4 | 11.8 | | 90° turn of head |
| 4 | B | E | 93.3 | 83.0 | 12.0 | 22 | Open port) |
| 4 | B | E | 96.2 | 84.1 | 13.8 | 22 | 13/16 port)* |
| 4 | B | E | 102.0 | 85.0 | 19.0 | 22 | 9/16 port) |
| 3 | B | E | 90.9 | 81.3 | 11.0 | | Swirl: {passages open |
| 3 | B | E | 82.6 | 69.2 | 15.7 | | {one inlet passage shut |

*Exhaust restrictions.

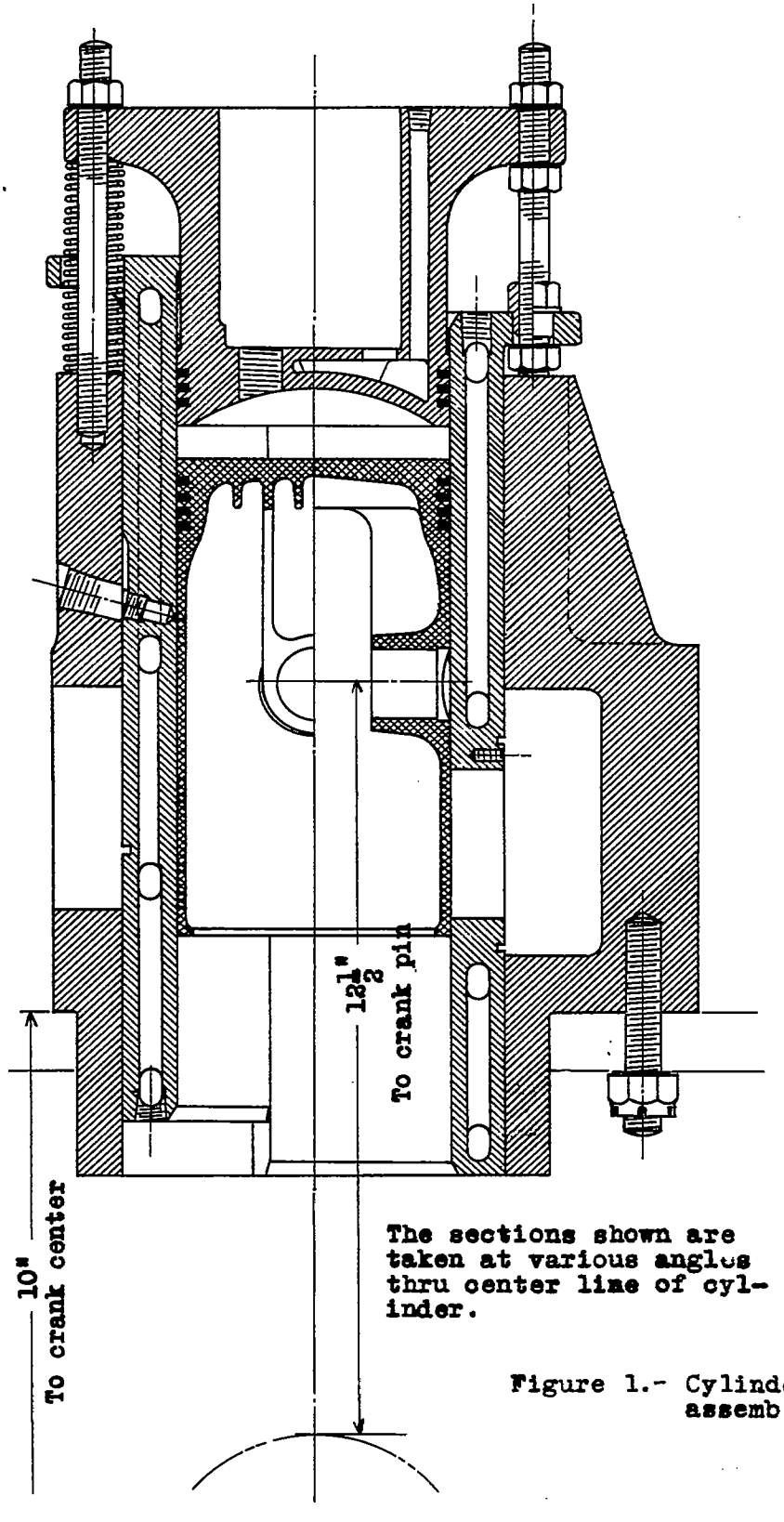


The sections shown are taken at various angles thru center line of cylinder.

Figure 1.- Cylinder assembly.

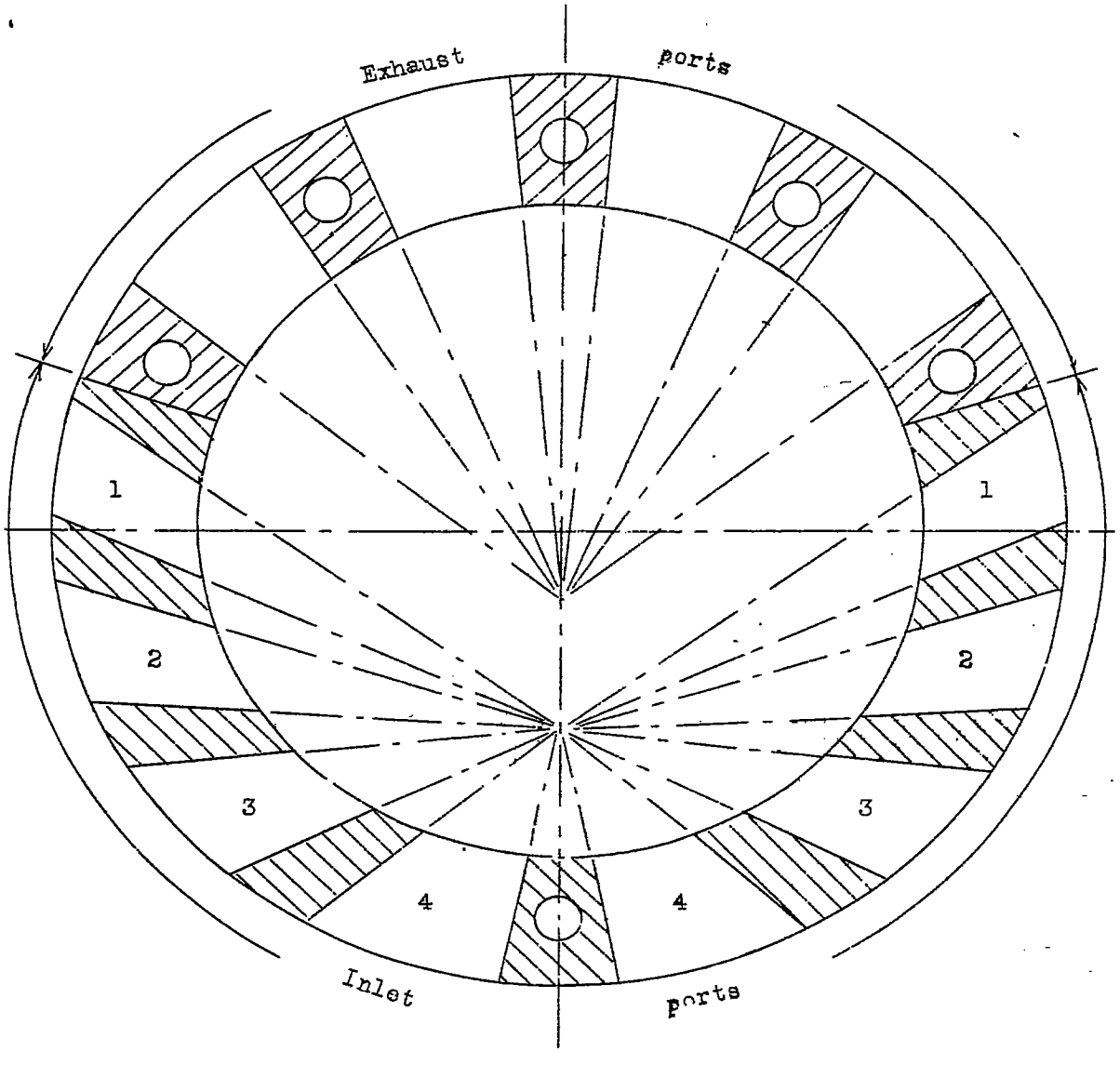


Figure 2.- Horizontal cross-section through ports, showing inlet-port numbering scheme.

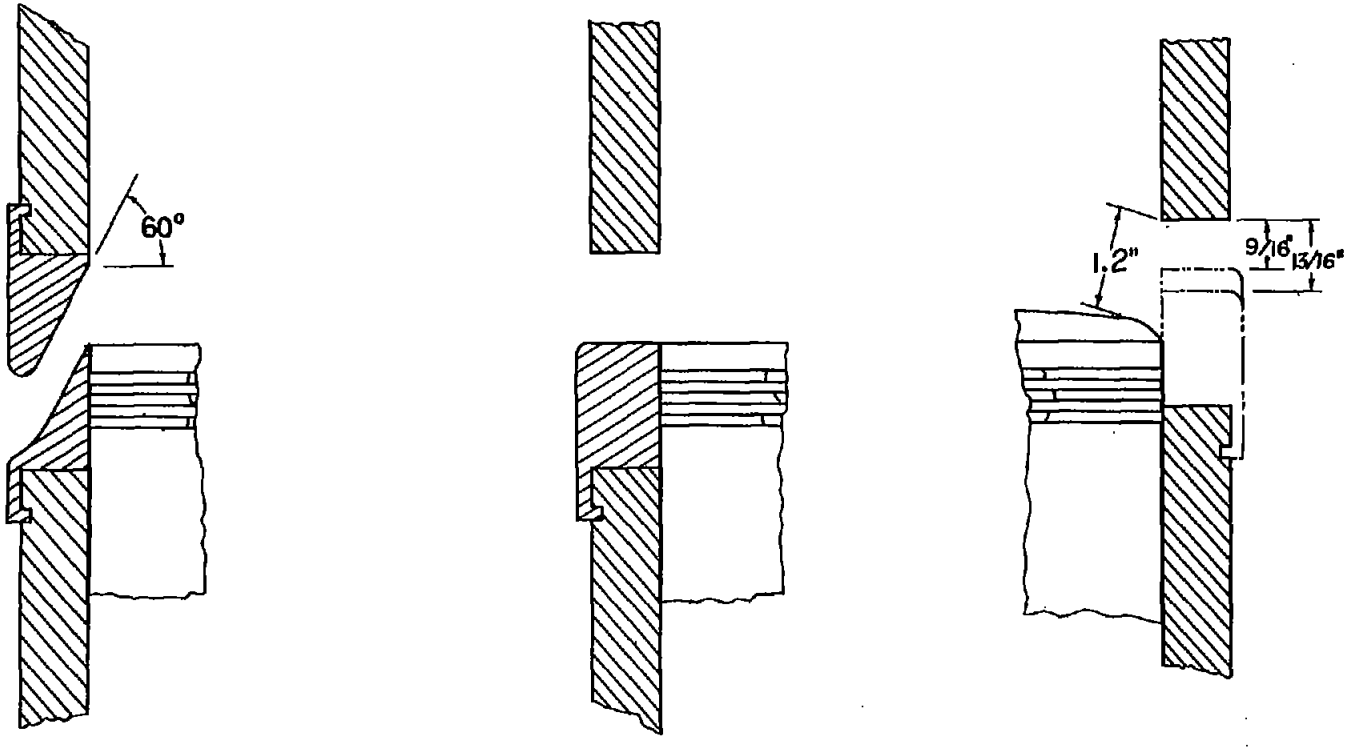


INLET PORT WITH 60° INSERTS IN PLACE

INLET PORT WITH 0° INSERT IN PLACE

EXHAUST PORT SHOWING HEIGHT OF TWO RESTRICTING INSERTS

Figure 3. - Principal inlet and exhaust-port inserts.

(piston shown at bottom center)

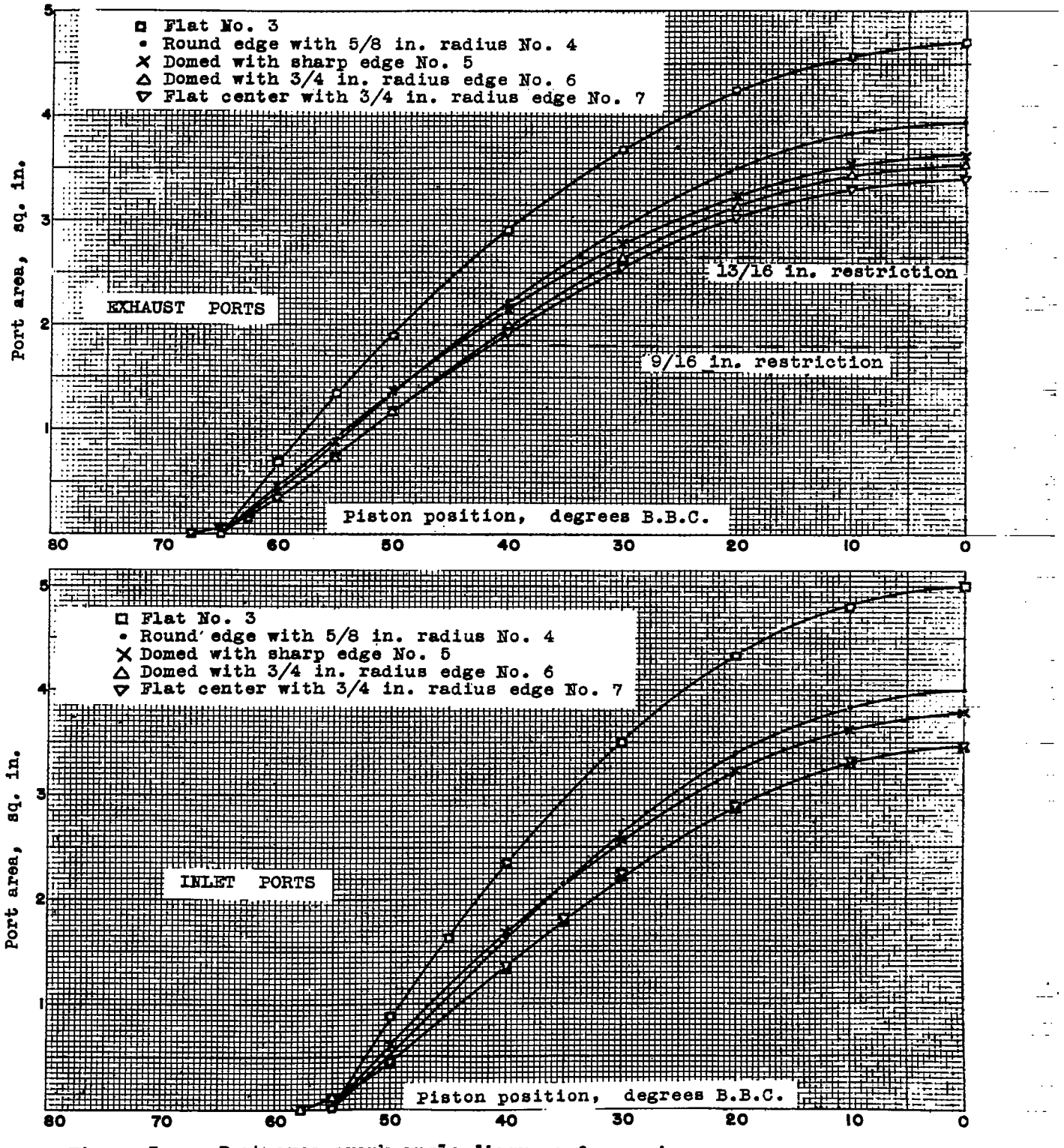


Figure 3a. - Port area-crank angle diagrams for various piston-head shapes. Optimum timing; zero degree inserts.

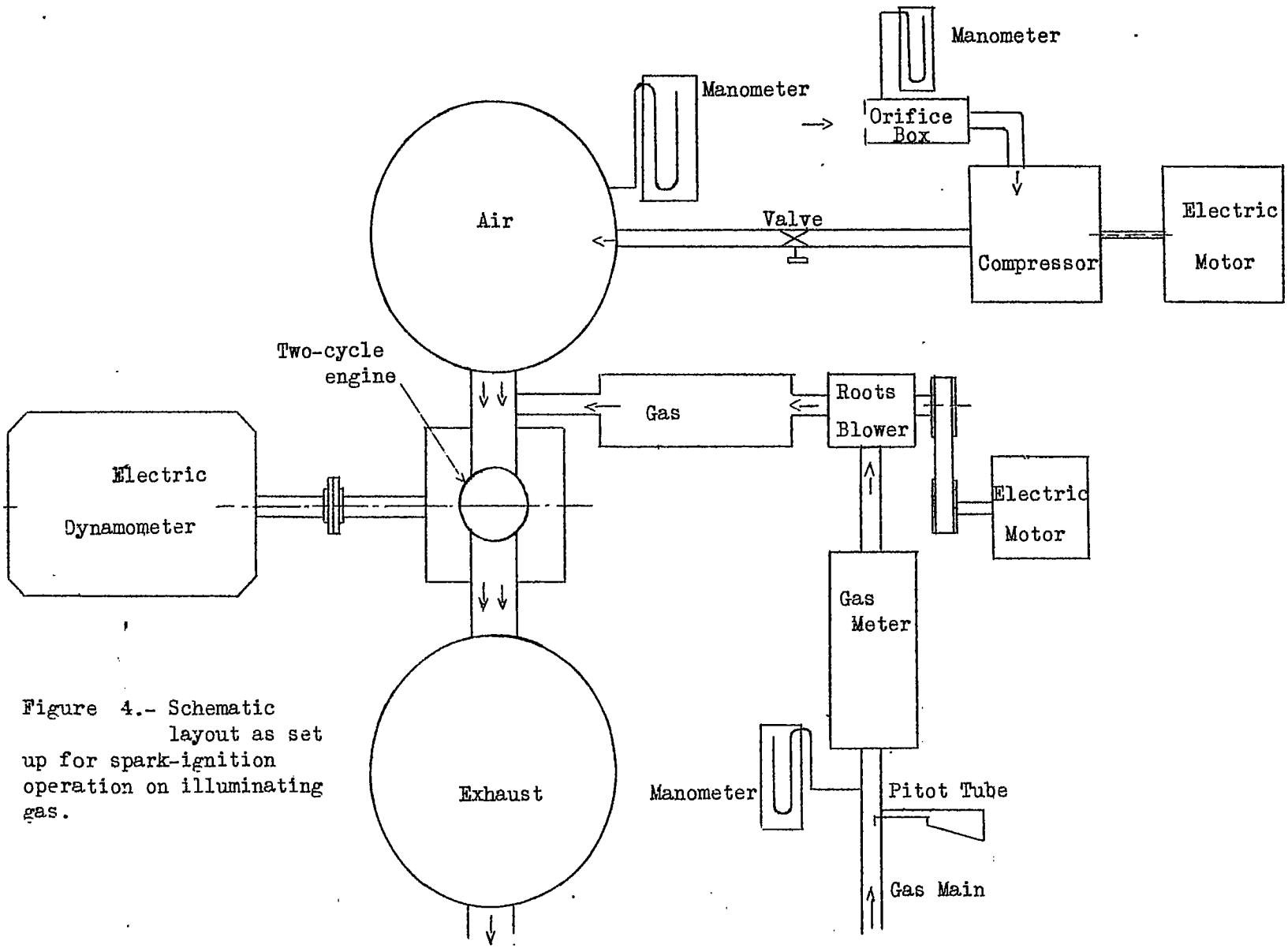


Figure 4.- Schematic layout as set up for spark-ignition operation on illuminating gas.

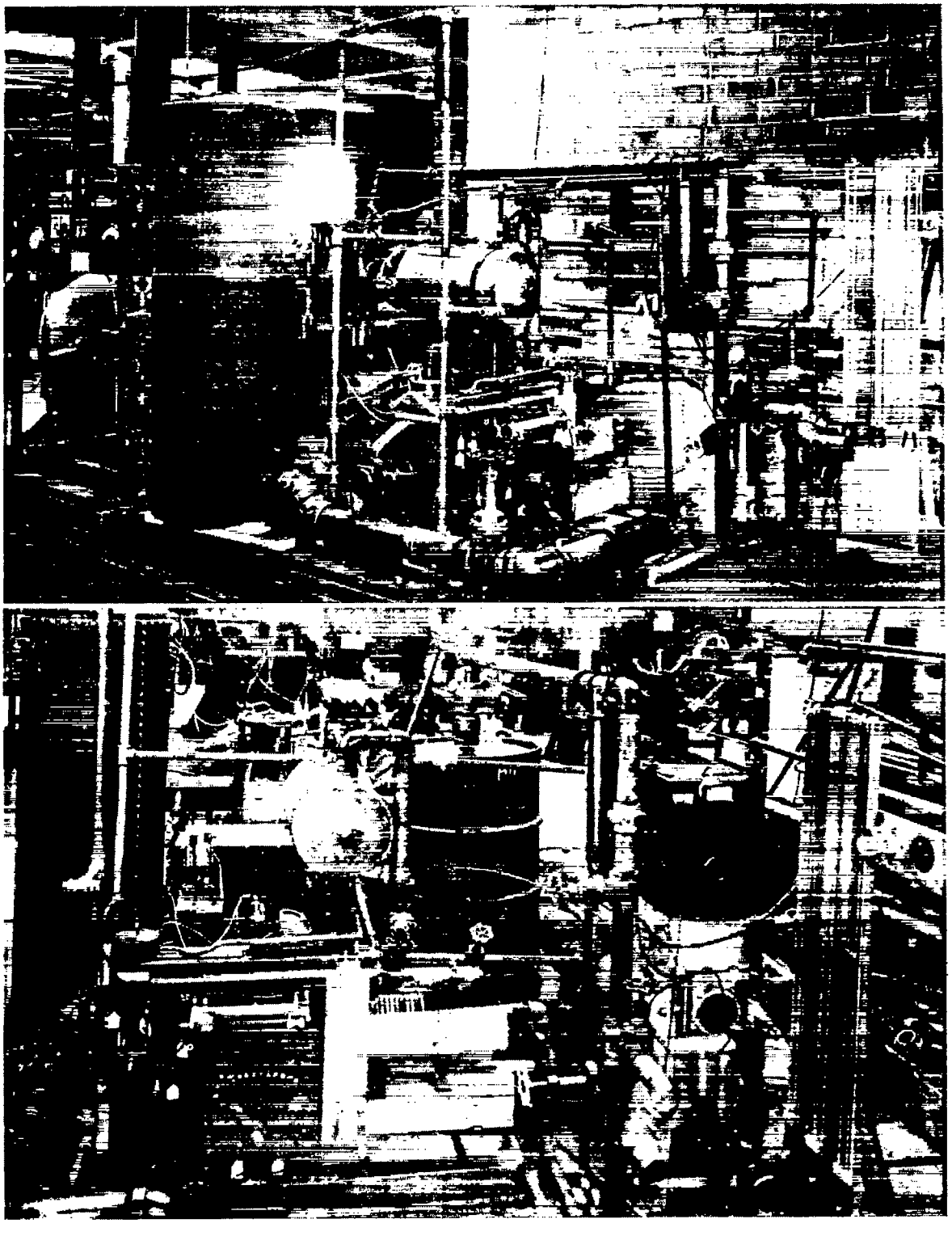

Figure 5.- Two views of engine set-up.

Figure 6. - Deflector piston head No. 1.

Figure 6a. - Deflector piston head No. 2.

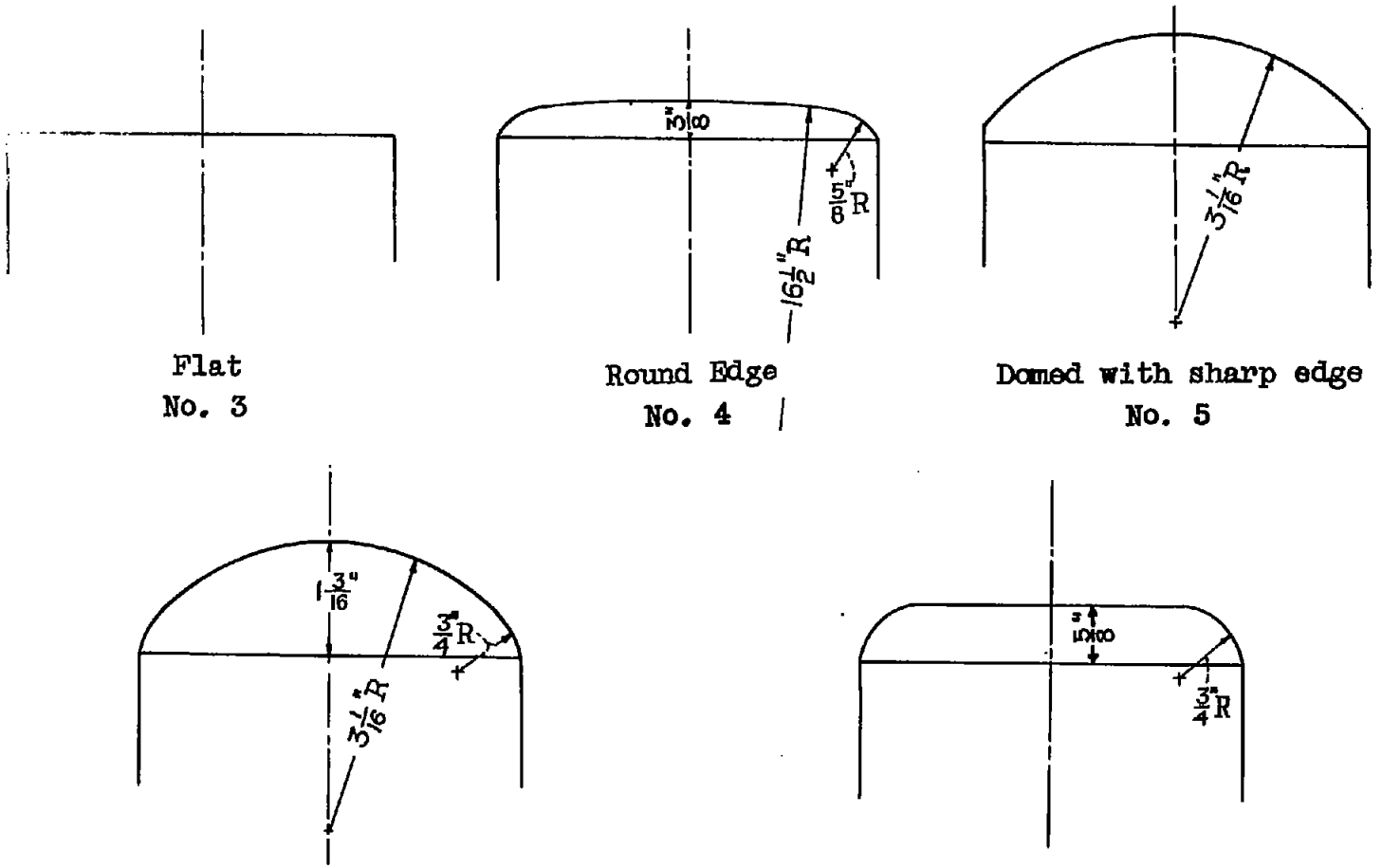


Figure 7. - Piston-head shapes.

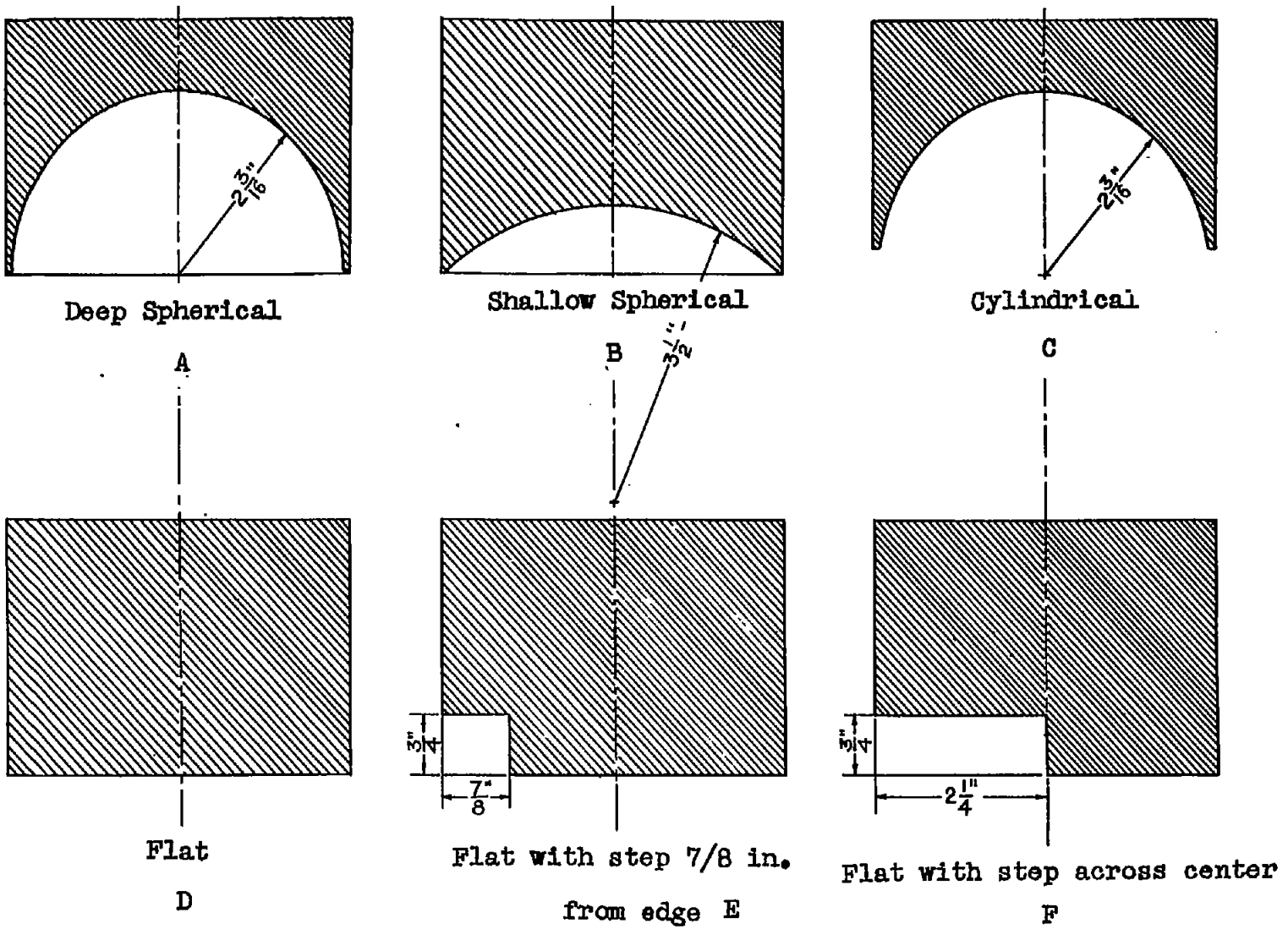


Figure 8. - Cylinder head shapes.

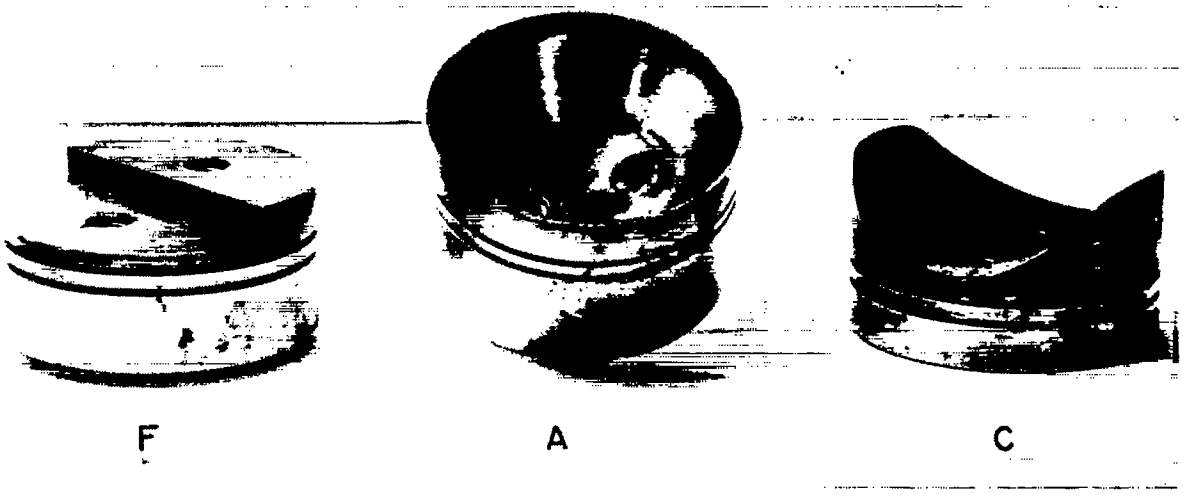


Figure 9.- Cylinder head shapes.

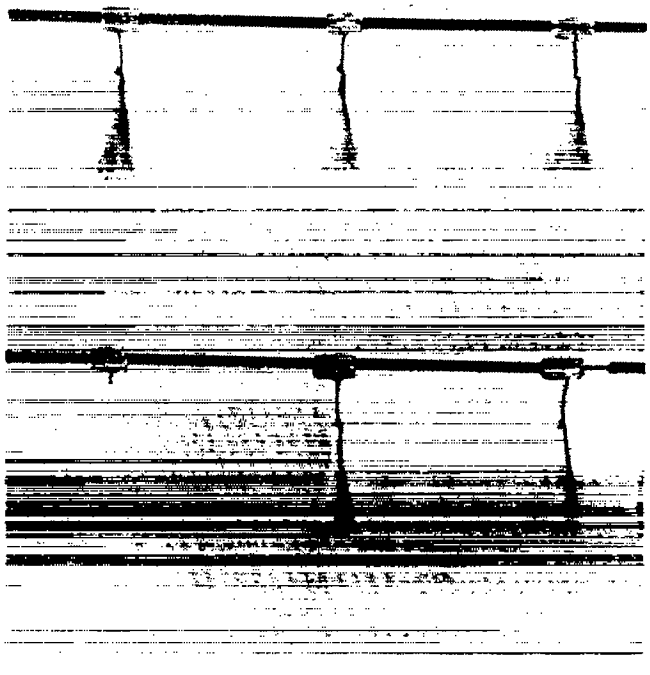

Figure 11.- Detail of flow frame construction.

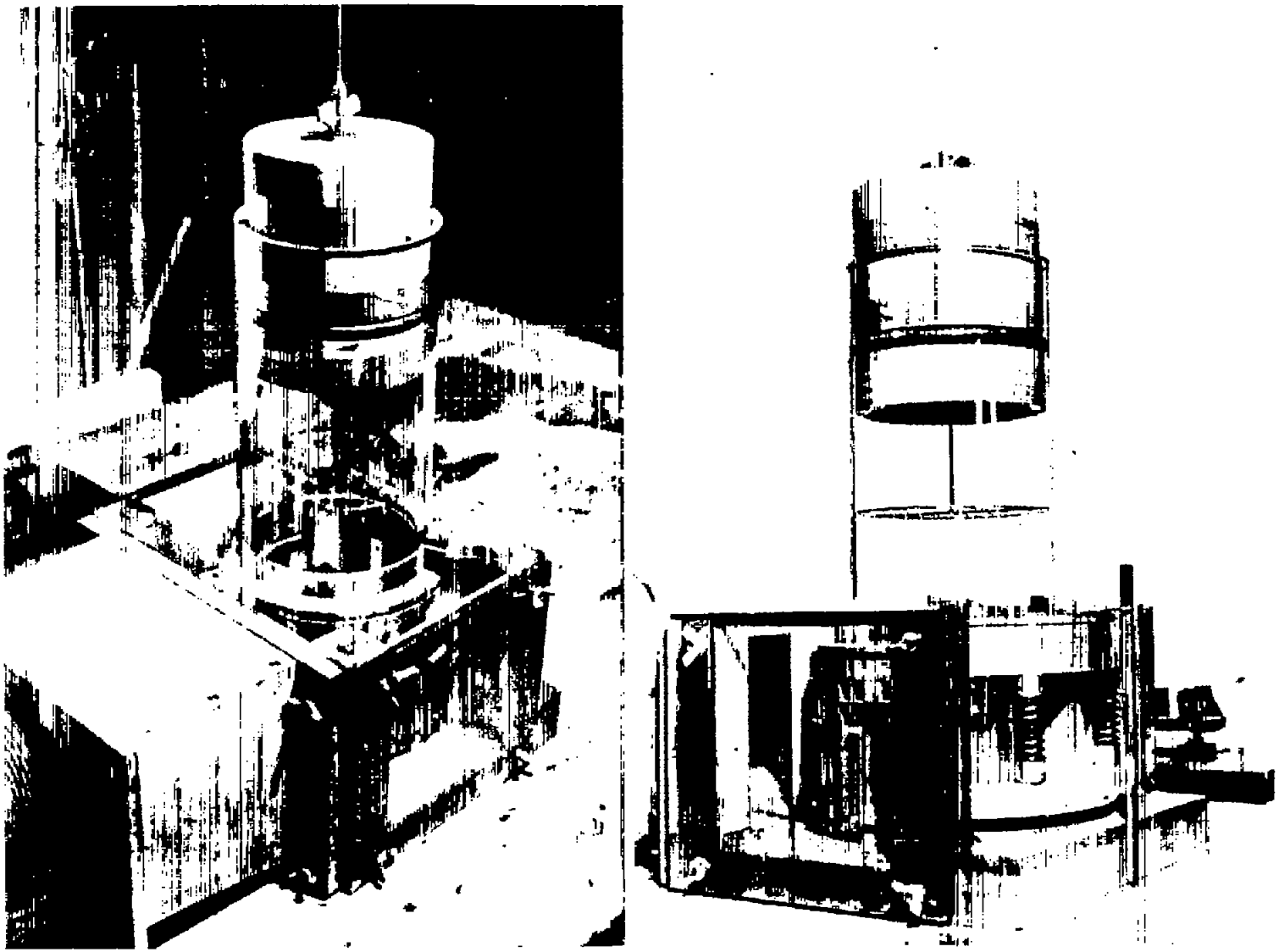

Figure 10.- Two views of flow model.

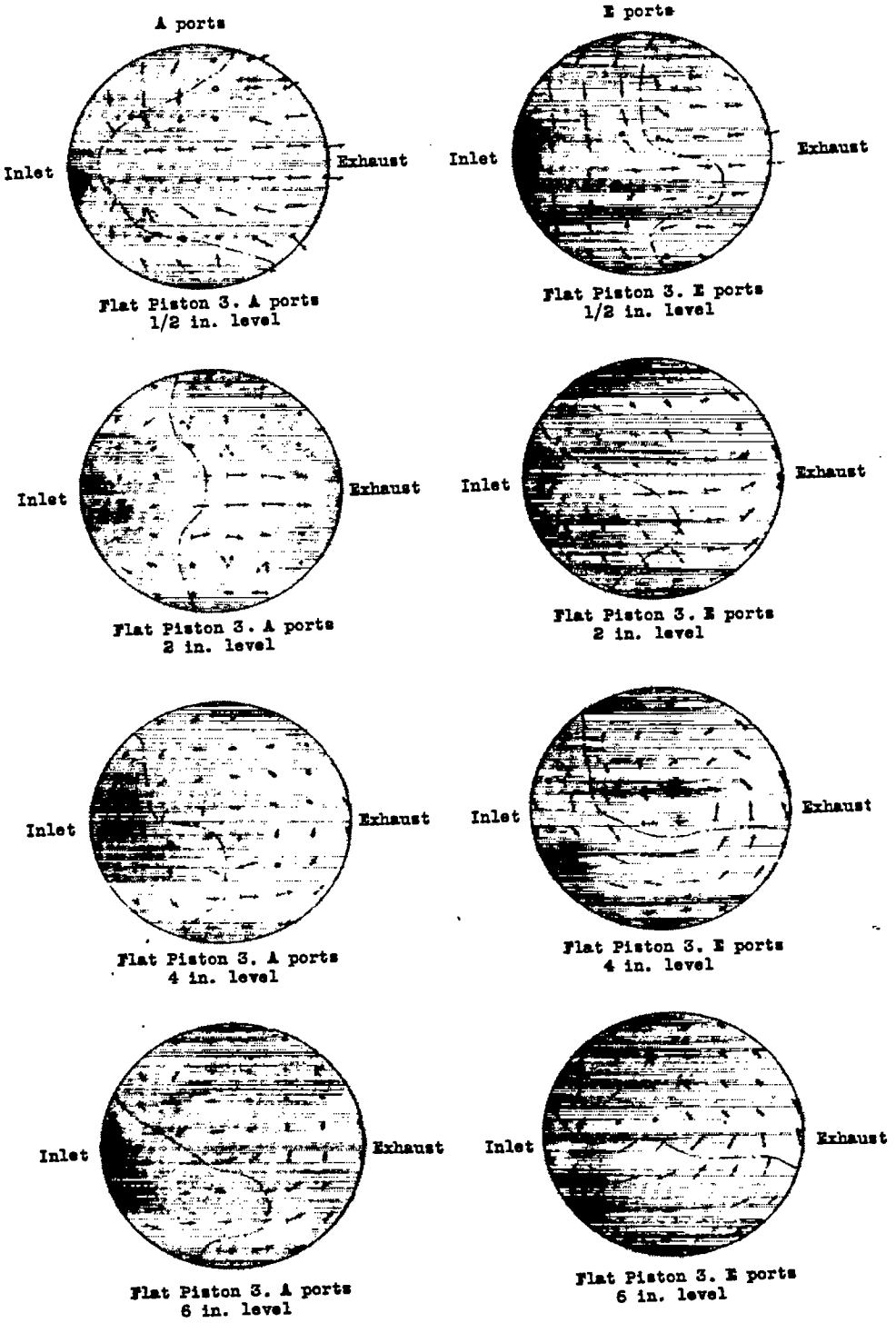


Figure 12.- Effect of inlet port arrangement on air flow in model cylinder at various distances above the piston head. Flat piston head No. 3; shallow spherical cylinder head B. (See pages 4,5 & 8 for symbols.)

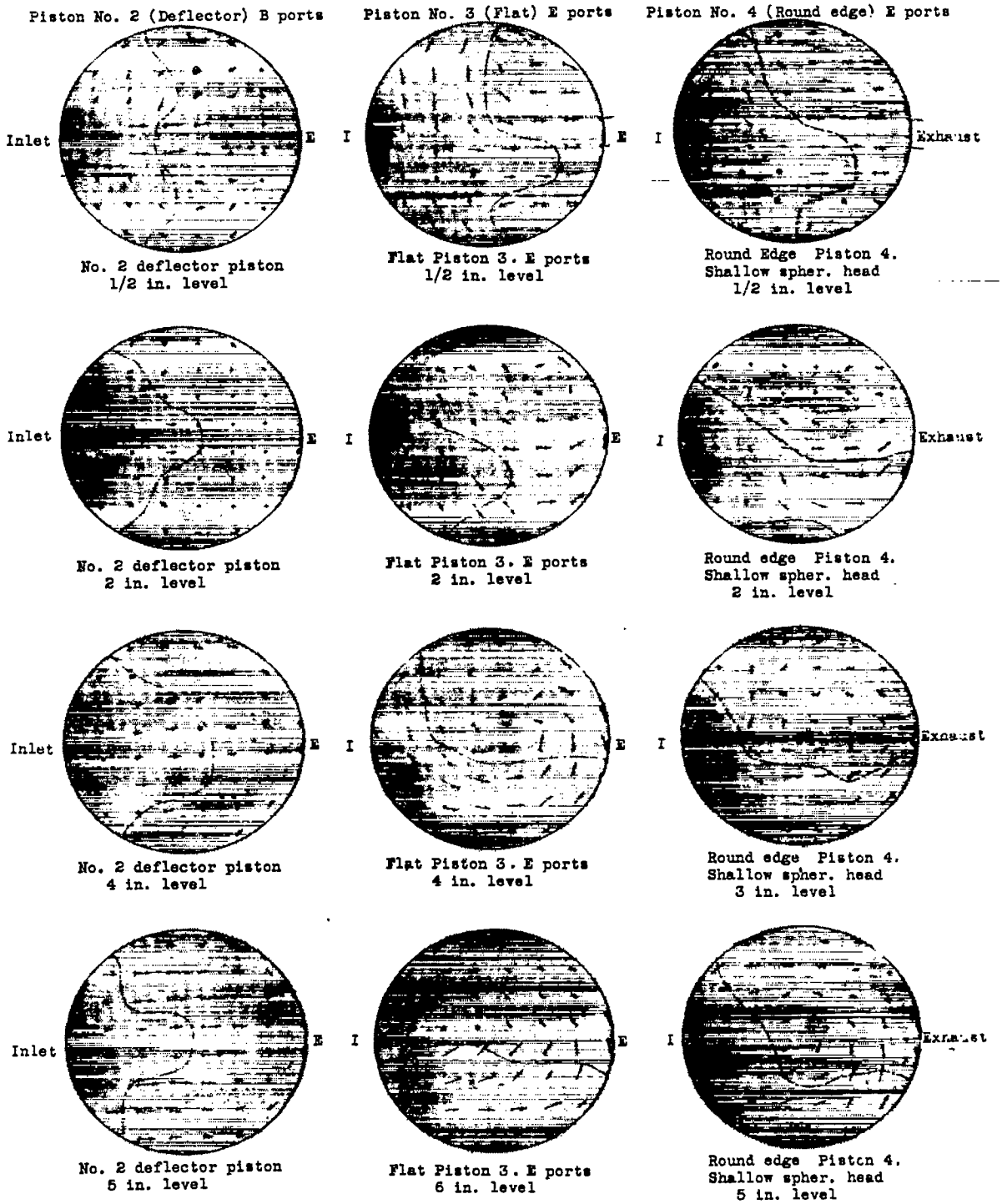


Figure 13.- Effect of piston head shape on air flow in model cylinder at various distances above the piston head. Shallow spherical cylinder head B. (See pages 4,5&6 for symbols)

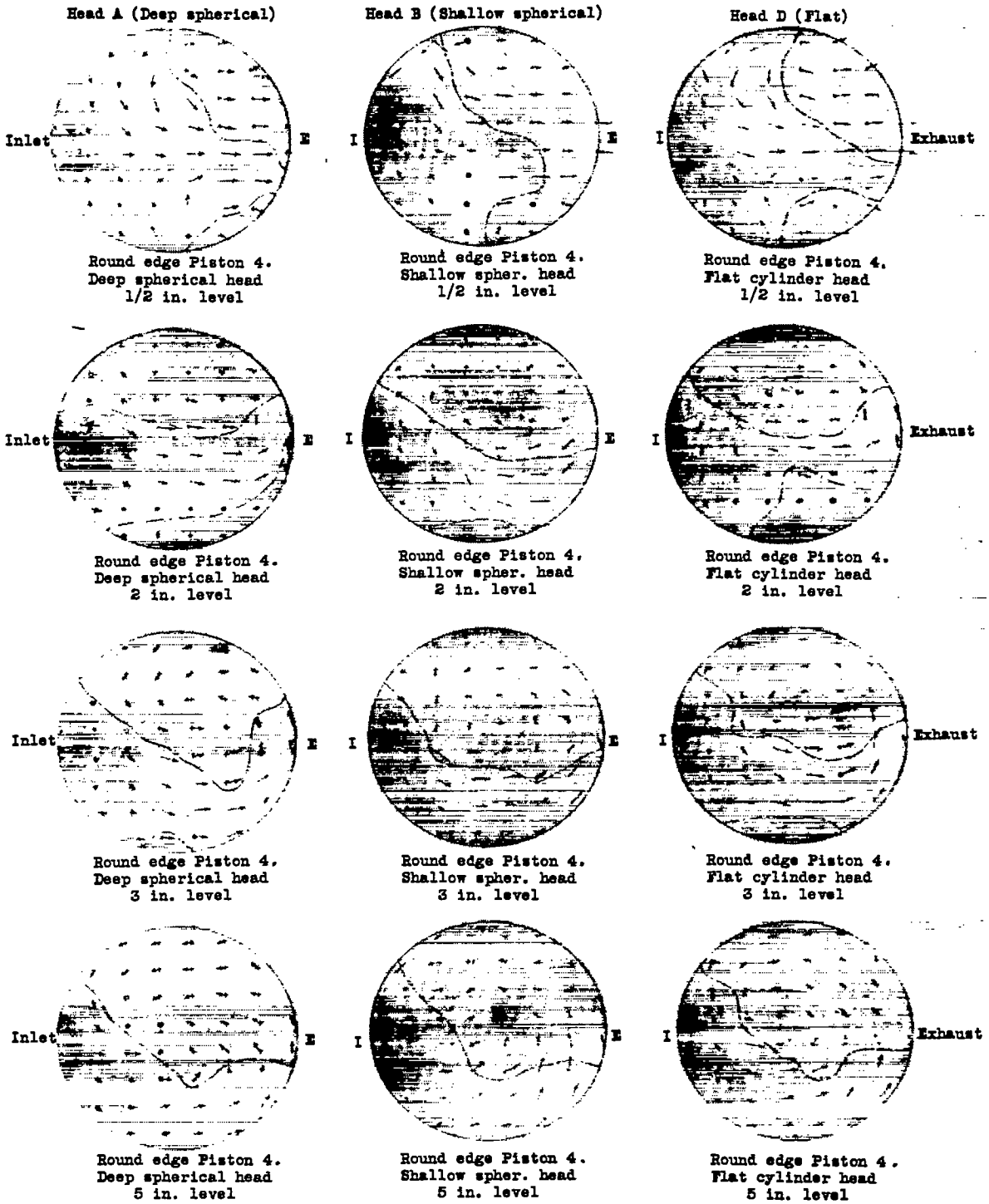


Figure 14.- Effect of cylinder head shape on air flow in model cylinder at various distances above the piston head. Round edge piston No. 4; E ports.
(See pages 4,5&6 for symbols)

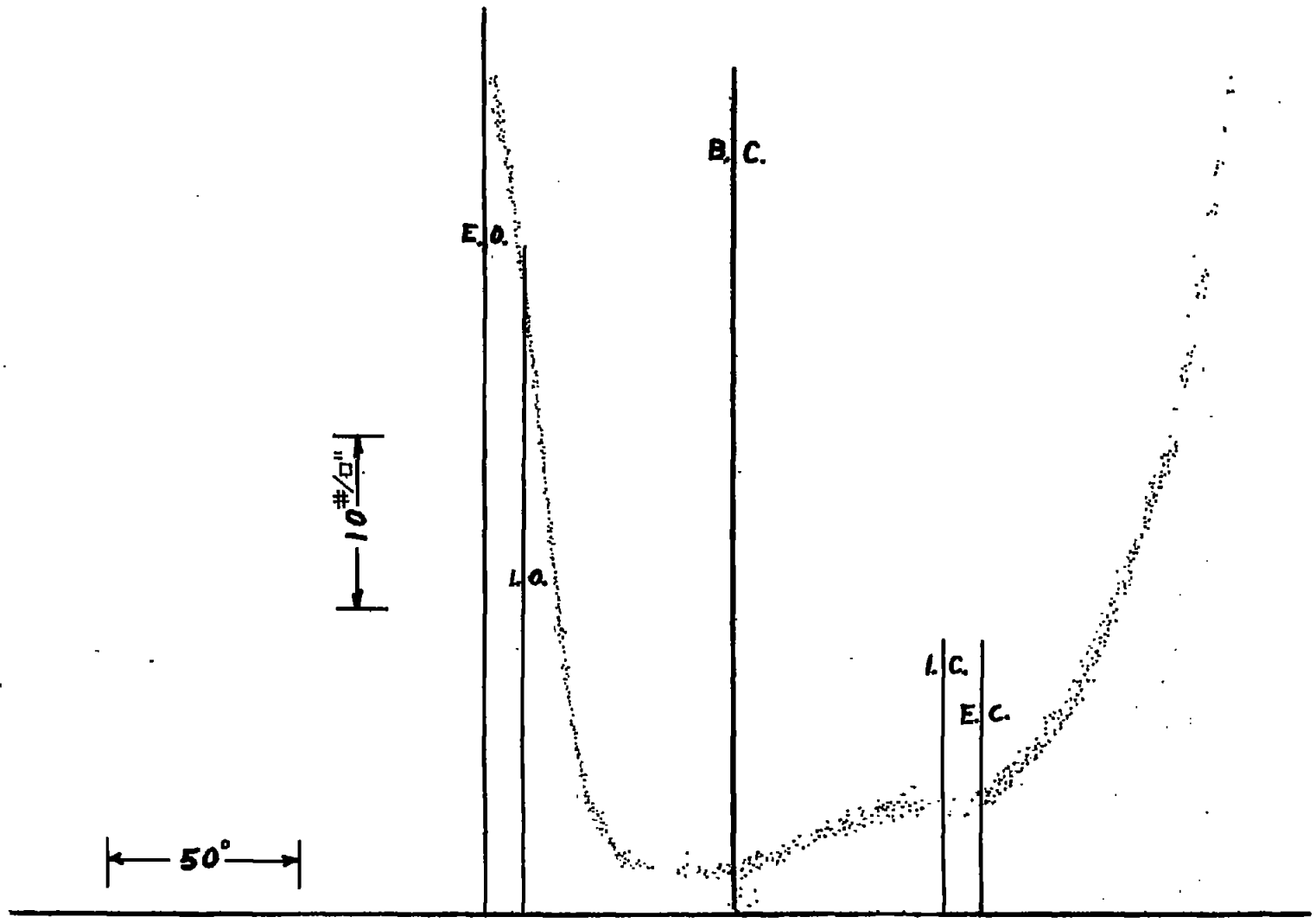


Figure 15. - Indicator diagram with 1.2 in. effective exhaust port height. Scavenge ratio 1.4; scavenge pressure 12 in. Hg; E ports; shallow spherical cylinder head B.

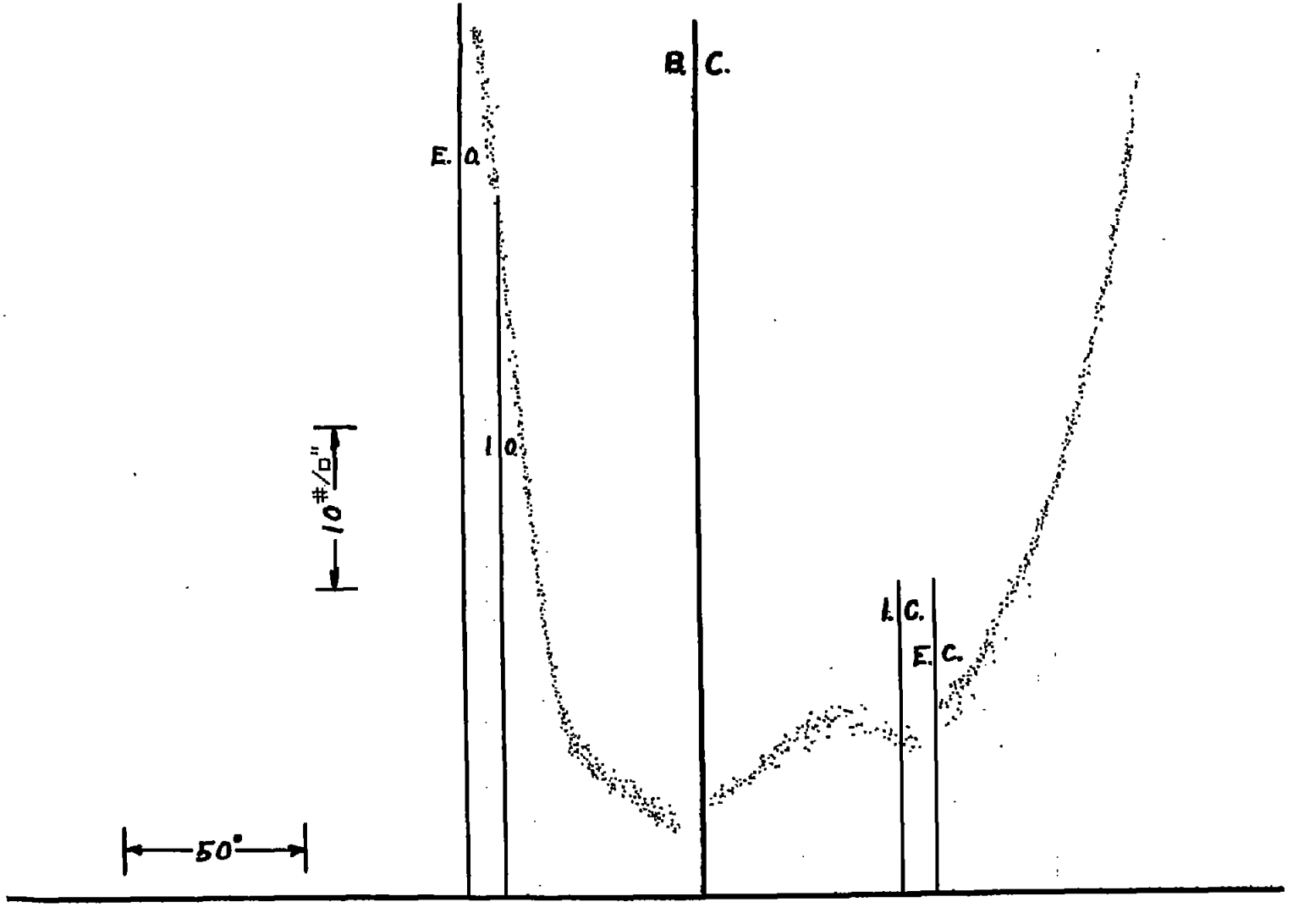


Figure 16. - Indicator diagram with 9/16 in. exhaust port height. Scavenge ratio 1.4; scavenge pressure 19 in. Hg; E ports; shallow spherical cylinder head B.

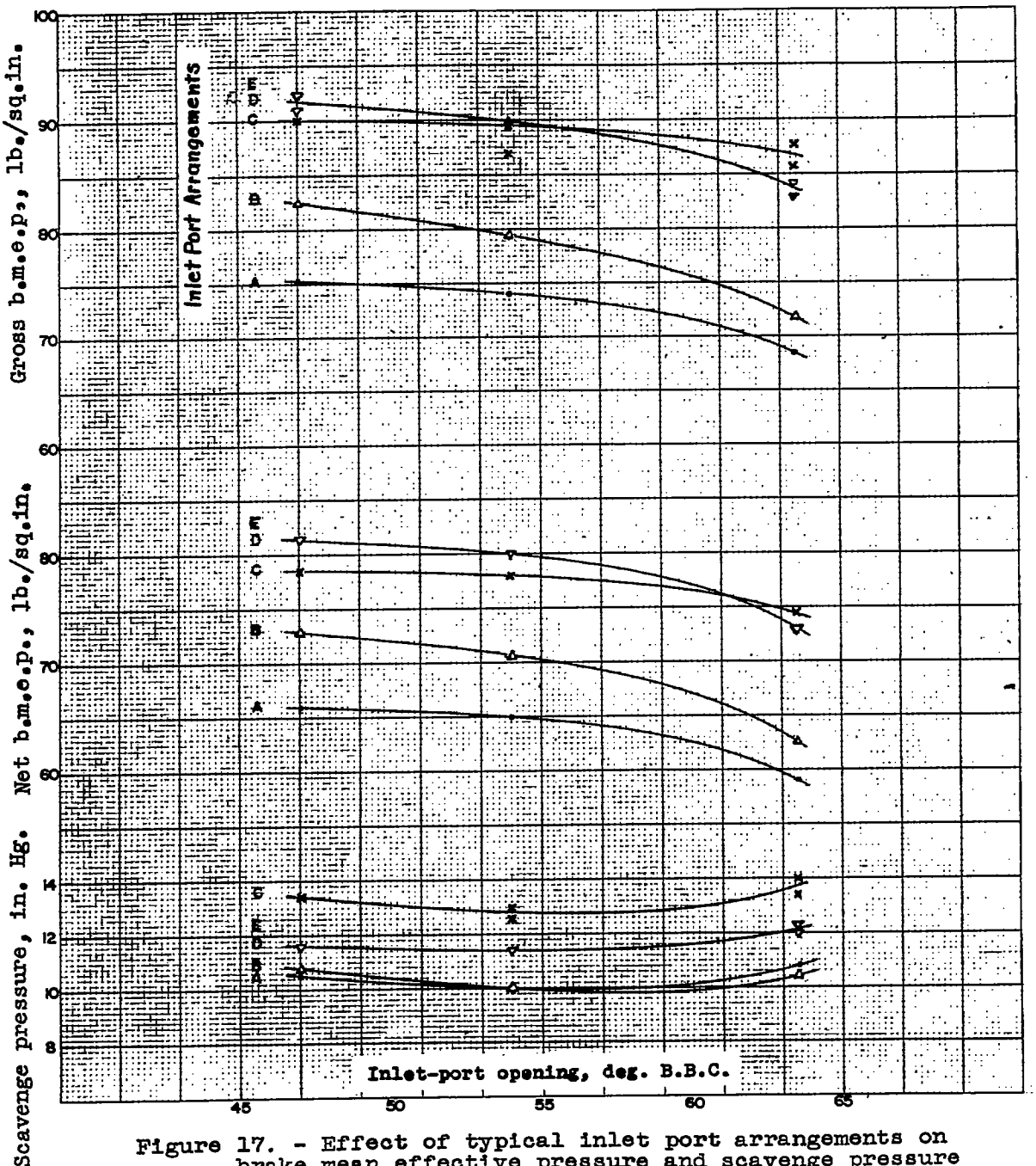


Figure 17. - Effect of typical inlet port arrangements on brake mean effective pressure and scavenge pressure at various inlet port timings. Flat piston No. 3, shallow spherical cylinder head B; scavenge ratio 1.4.

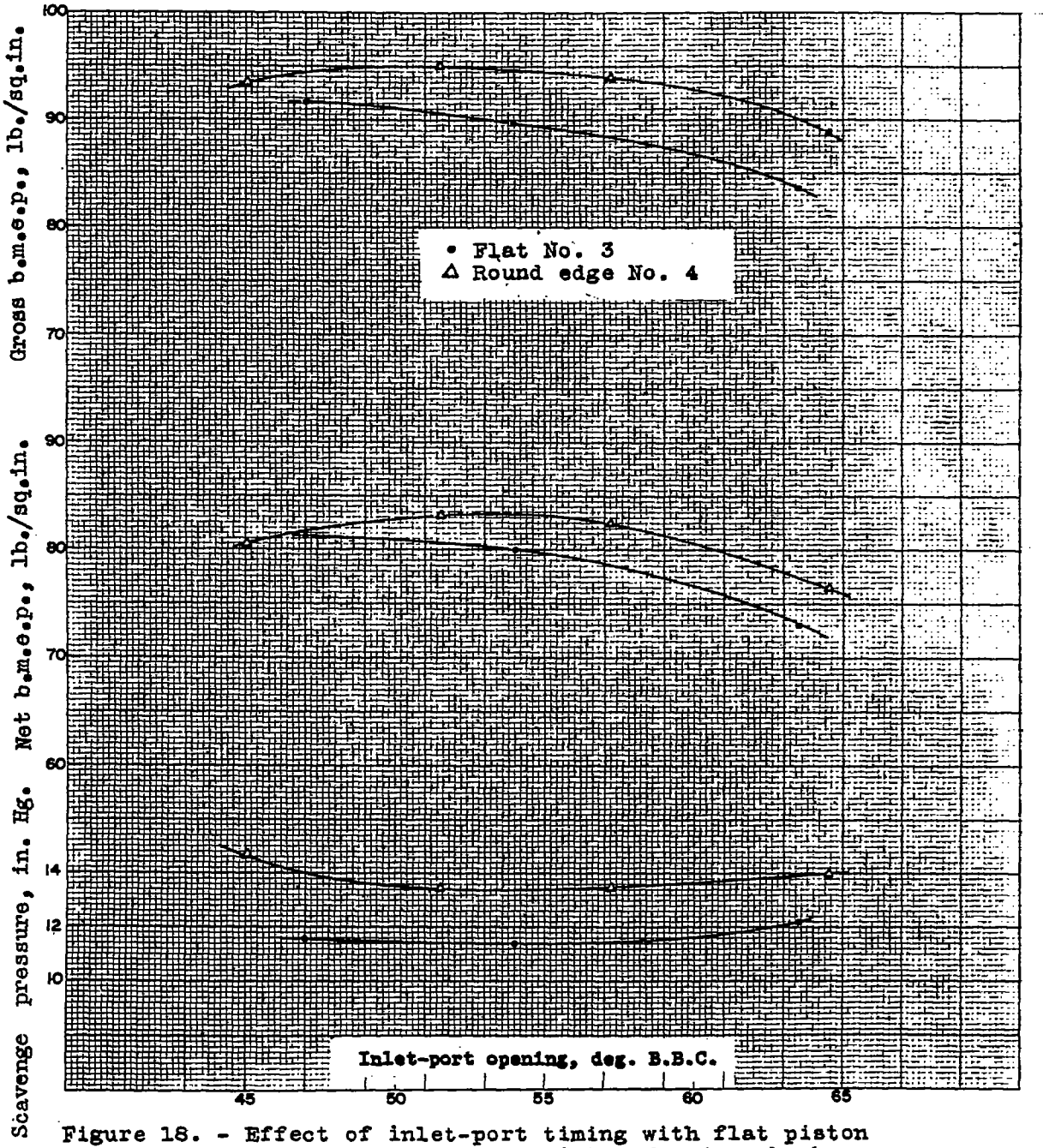


Figure 18. - Effect of inlet-port timing with flat piston No. 3 and round edge piston No. 4 on brake mean effective pressure and scavenge pressure. Shallow spherical cylinder head B; scavenge ratio 1.4. E ports.

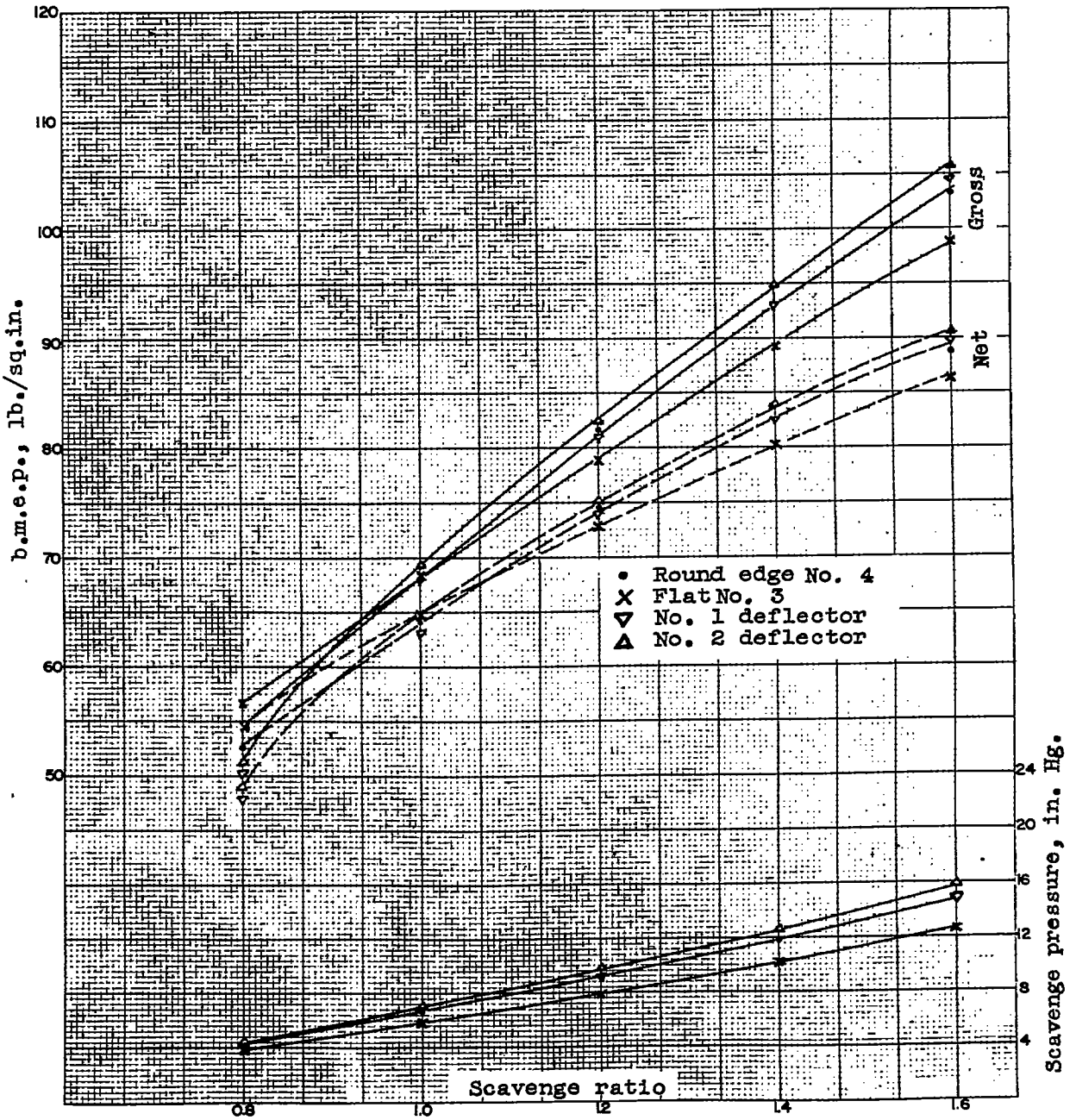


Figure 19.- Effect of piston head shape on brake mean effective pressure and scavenge pressure at various scavenge ratios. Shallow spherical cylinder head B. B ports used with pistons No. 1 and 2. E ports used with pistons No. 3 and 4.

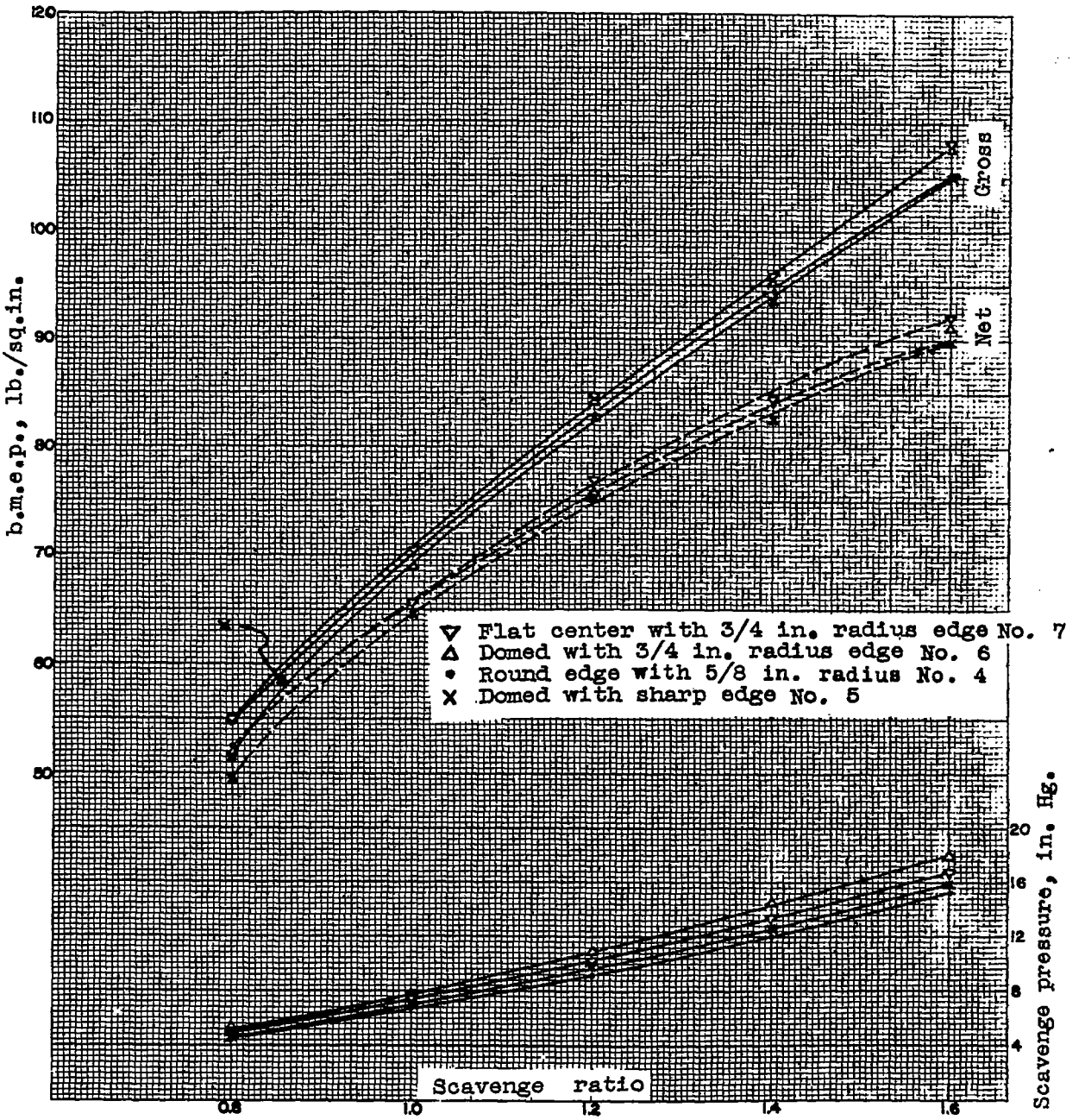


Figure 20. - Effect of domed piston head shapes on brake mean effective pressure and scavenge pressure at various scavenge ratios. Deep spherical cylinder head A; E ports.

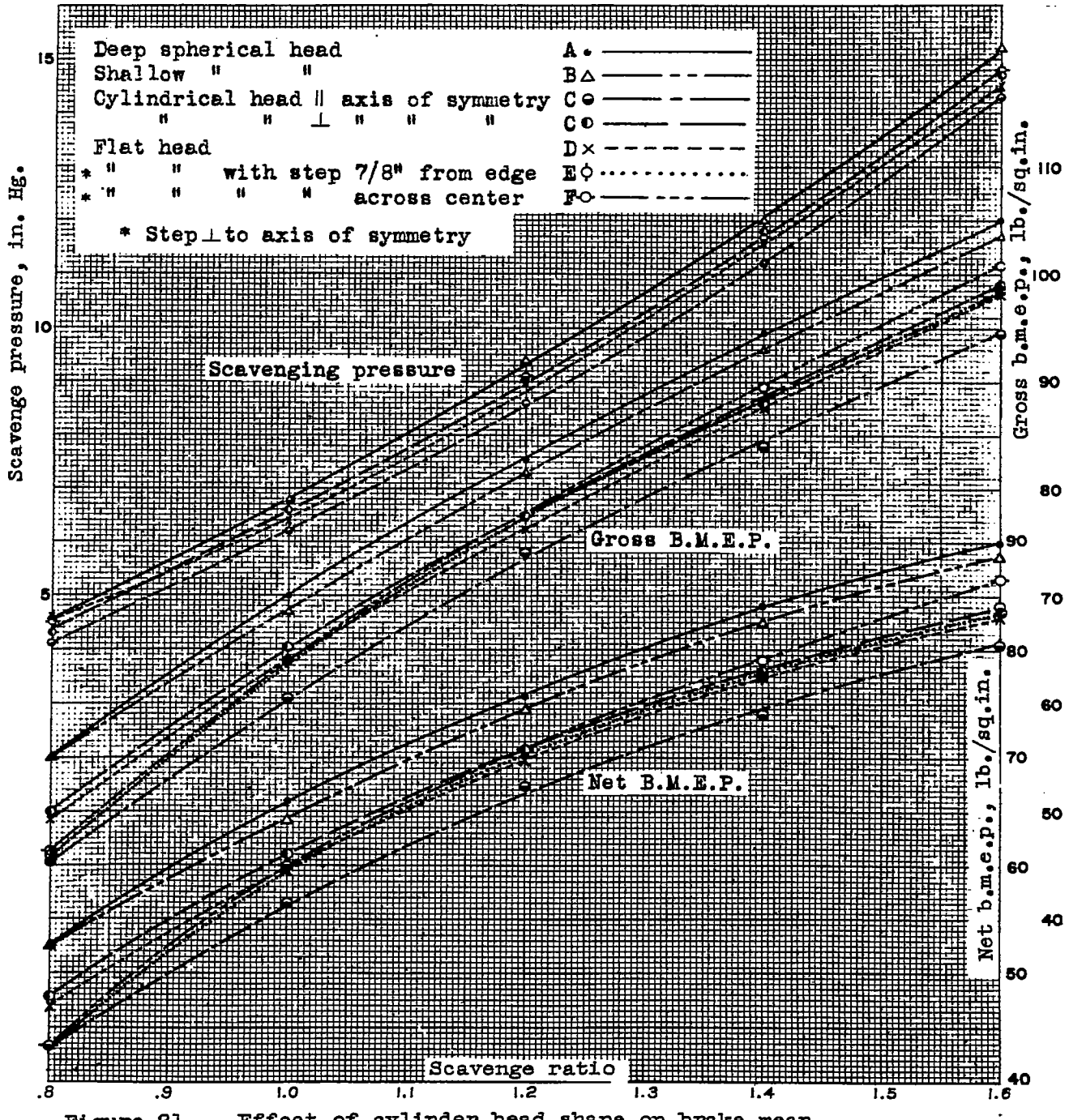


Figure 21. - Effect of cylinder head shape on brake mean effective pressure and scavenge pressure at various scavenge ratios. Round edge piston No. 4; E ports.

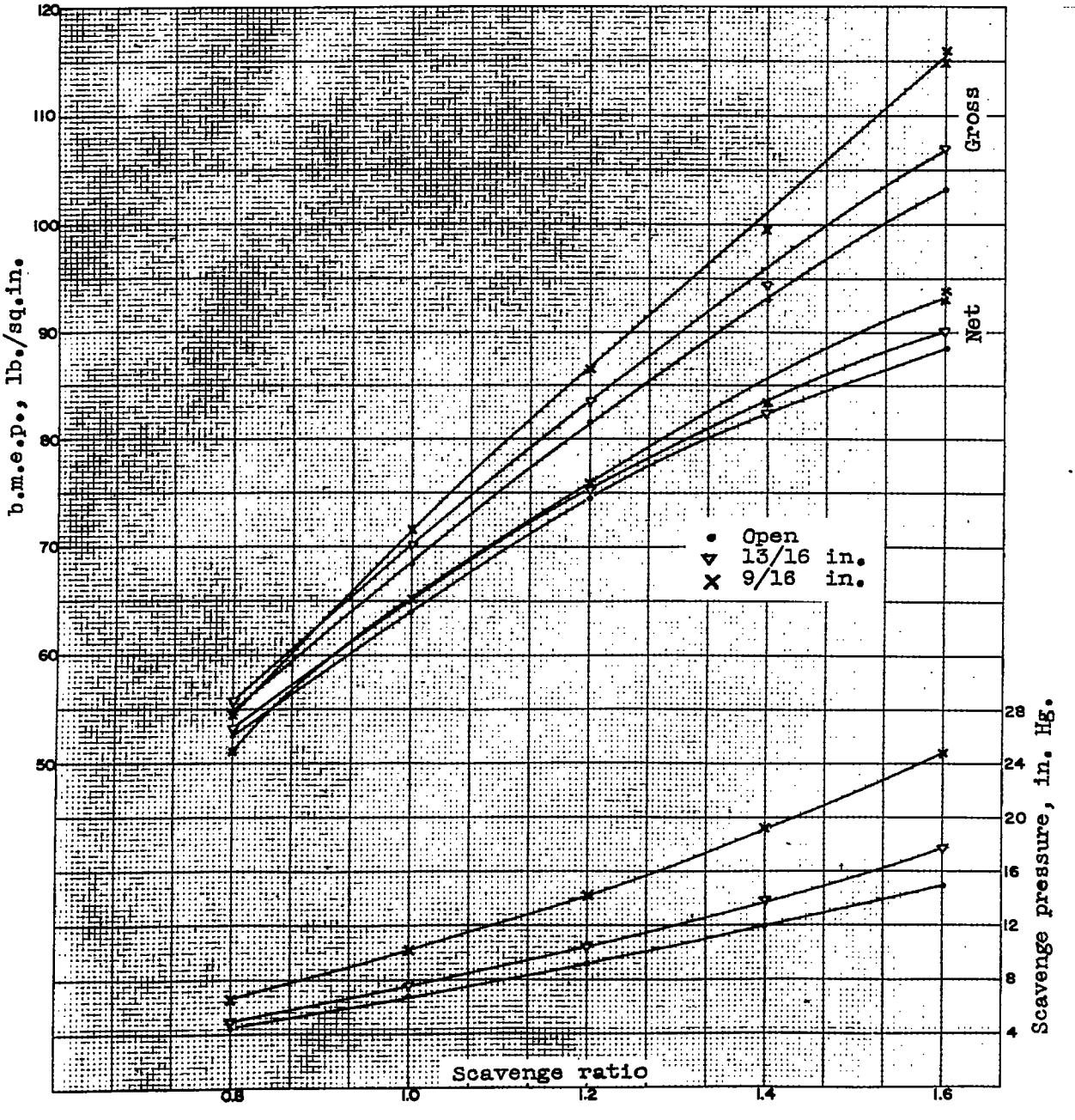


Figure 22. - Effect of exhaust port restrictions on brake mean effective pressure and scavenge pressure for various scavenge ratios. Shallow spherical cylinder head B; round edge piston No. 4. E inlet ports.