JUN 29 1940

NACA
CLASSIFICATION CANCELLED

RESTRICTED

TECHNICAL NOTES

NATIONAL ADVISORY COMMITTEE FOR AERONAUTICS

No. 765

A METHOD OF MEASURING PISTON TEMPERATURES

By Benjamin Pinkel and Eugene J. Manganiello
Langley Memorial Aeronautical Laboratory

FILE COPY
To be returned to
the files of the Langley
Memorial Aeronautical
Laboratory.

Washington
June 1940

3 1176 01433 7480

NATIONAL ADVISORY COMMITTEE FOR AERONAUTICS

TECHNICAL NOTE NO. 765

A METHOD OF MEASURING PISTON TEMPERATURES

By Benjamin Pinkel and Eugene J. Manganiello

SUMMARY

A method that makes use of thermocouples has been developed to measure the temperatures of engine pistons operating at high speeds. The thermocouples installed on the moving piston are connected with a potentiometer outside the engine by means of pneumatically operated plungers, which make contact with the piston thermocouples for about 10 crankshaft degrees at the bottom of the piston stroke. The equipment is operated satisfactorily at engine speeds of 2,400 rpm and shows promise of successful operation at higher engine speeds.

Measurements of piston temperatures in a liquid-cooled compression-ignition engine and in an air-cooled spark-ignition engine are presented.

INTRODUCTION

The present trend in aircraft engines toward higher specific output requires, among other things, that more adequate piston cooling be provided. Information on piston cooling is meager because of the lack of a practicable method of making piston-temperature determinations at engine speeds in use at present. References 1 and 2 present piston-temperature data obtained by the procedure of stopping the engine from an operating condition, inserting a thermocouple through a spark-plug hole and into thermocouple holes in the piston, obtaining a temperature-time curve and extrapolating it back to the time of stopping. Reference 3 reports determinations of piston temperature obtained by the use of fusible plugs. Neither of these methods can be considered satisfactory for the accurate determination of piston temperatures during engine operation.

A few investigators have reported (references 4 to 7)

the results of temperature determinations, by means of thermocouples installed on the piston, covering a speed range from 200 to 1,500 rpm made on oil and gasoline engines. In these tests, the circuit between the thermocouples and the indicating instrument was completed by wires, which were supported by a mechanical linkage. This system appeared to be quite limited as to speed of operation and ease of applicability.

A method of determining temperatures of pistons operating at speeds up to 2,000 rpm was developed by F. Glen Shoemaker of the Matériel Division of the Air Corps at Dayton, Ohio, in 1927. This method entailed the completion of the circuit of a piston thermocouple by springs that made contact for a short period at the bottom of the piston stroke. The thermal electromotive forces were measured by a potentiometer. This method was considered impracticable for continued operation at high speeds because of the spring contacts.

As part of a program for the study of piston cooling at high engine speeds, the N.A.C.A. undertook the development of a method of determining piston temperatures. The development consisted in a modification of the Shoemaker method with the spring-actuated contacts replaced by pneumatically operated contacts to complete the thermocouple circuit. This note presents a description of the N.A.C.A. method and sample piston-temperature data obtained on a compression-ignition and a spark-ignition engine.

DESCRIPTION OF METHOD

The thermocouple electromotive forces are balanced by means of a potentiometer, balance being indicated when a galvanometer in the circuit shows zero current. The thermocouples installed in the moving piston are connected to insulated contacts fastened on the wrist-pin boss (fig. 1(a)). At the bottom of the piston stroke, for about 10° of crank angle, these contacts mate with and depress similar contacts mounted on pneumatically operated plungers (fig. 1(b)). Wires from these plunger contacts are led to a cold junction and then to the potentiometer.

The intermittent circuit resulting from this arrangement introduces no error or difficulty in the measurement of the thermocouple potentials because zero current flows

in the circuit when balance is obtained with the potentiometer. The accuracy or the sensitiveness of the balance, and hence of the measurement, depends upon the magnitude of the current flowing in the circuit during off-balance as indicated by a galvanometer. Under the conditions of interrupted contact, the indicated current is equal to the average value of current over a cycle and therefore depends upon the percentage time that the circuit is closed, i.e., the percentage period of contact, and is independent of speed. The flexing of the wires attached to the plunger contacts should be minimized to obtain durability, which necessitates a short plunger stroke and an attendant small percentage period of contact. A sensitive galvanometer is thus required. For this equipment, which had a 1/64-inch plunger stroke or about 3 percent time of contact, a portable reflecting-type spotlight galvanometer with a sensitivity of 0.05 microampere per millimeter was found to be within the accuracy of the portable precision-type potentiometer used.

A preliminary bench test of the method was made with apparatus that simulated the action of a piston. Wires from a thermocouple were connected to contacts fastened to a cam-actuated rocker arm that mated with the plunger contacts and depressed them for several degrees of each revolution of the cam. The circuit was then completed through the galvanometer and the potentiometer. The thermocouple was immersed in boiling glycerin, the temperature of which was checked with a calibrated thermocouple. Balance was easily and quickly obtained; the accuracy was limited by the potentiometer. Oil on the contacts had no discernible effect. Stray electromotive forces, such as those resulting from static charges or cell action, if present, were negligible. The preliminary test demonstrated the practicability of this method of obtaining piston temperatures with an accuracy within that of the thermocouple calibration.

Single Thermocouple Installation

The first circuit-closing mechanism, which was constructed for preliminary tests, provided for one thermocouple and was installed on a water-cooled compression-ignition engine having a displacer-type piston. The mechanism is shown in figures 1 and 2.

The thermocouple was peened into the displacer 1/16 inch below the top surface on the exhaust-valve side of

the rear corner of the displacer and insulated with alundum insulators. (See figs. 1 and 3.) The corner of the displacer that had been cut away to permit the thermocouple installation was built up with aluminum weld. The alundum insulators were secured in position by upsetting the metal on the under side of the crown into circumferential grooves cut in the insulators. From the crown to the contacts, the 22-gage chromel and constantan thermocouple wires were insulated with a flexible woven-glass sleeving capable of withstanding temperatures in the neighborhood of 1,000° F. The insulated wires were encased in copper tubing having a 0.009-inch wall to protect the insulation against mechanical effects and were supported in the piston by clamps spaced less than 1 inch apart. The problem of maintaining the installation intact at high speeds required the exercise of every precaution in the protection of the wires against vibration.

The contacts, which were set in a micarta strip fastened to the wrist-pin boss, were made of material having the same thermoelectric properties as the wires to which they were connected. Some difficulty was experienced in the insulation of the contacts from the boss because the heat weakened the insulating backing strip and the repeated impact shocks caused the contacts to break through it. The construction finally adopted, shown in figure 1(a), eliminated this trouble. It consisted in backing the contacts with circular steel disks that distributed the load over the fiber insulating strip, which was further backed with a steel strip and a mica strip for heat insulation.

The mating chromel and constantan contacts (fig. 1(b)) that completed the circuit at the bottom of the piston stroke were silver-soldered into shallow recesses in the tops of the hollow steel plungers. These plungers were lap-fitted with steel sleeves that screwed into a micarta block. Pegs projecting from the bottoms of the sleeves and fitting slots in the shoulders of the plungers prevented rotation of the plungers. Fiber washers were cemented to the bottoms of the sleeves to reduce impact shock on the upstroke of the plungers.

The thermocouple circuit was continued from the plunger contacts by 1/16-inch-diameter rods of the same material as the contacts to which they were fastened. Each rod was inserted in a hole in the contact and soldered. Piano-wire loops were each soldered at one end to one of these rods and, at the other end, to a wire of the same

material as the rod. These wires led to the cold junction at which was located a thermometer. At first, these chromel and constantan wires were attached directly to their respective plunger contacts; this arrangement was unsatisfactory at high speeds, however, because the wires were not sufficiently strong to withstand the fatigue stresses resulting from repeated flexing. The use of the piano-wire loops solved this problem. The effect of extraneous electromotive forces caused by the introduction of another metal into the thermocouple circuit was nullified by placing the ends of the rod and the wire between which the piano wire was interposed sufficiently close that no sensible difference in temperature, or therefore in potential, could exist between these junctions. Copper wires from the cold-junction box to a portable precision-type potentiometer and the spotlight galvanometer previously mentioned completed the circuit.

Compressed air was admitted to the plungers through copper tubing that connected the air passages in the micarta block to a compressed-air bottle. A regulator was used to vary the air pressure on the plungers to meet the different engine-speed conditions. The required air pressure could be quickly determined because insufficient pressure for any engine-speed condition resulted in an oscillation of the galvanometer and a decrease in the sensitivity of balance. Inasmuch as the time required to take readings was small compared with the time required to adjust the engine operating conditions, a means to keep the plungers from mating with the piston contacts was provided by a two-way cock in the copper tubing. The air passages could be connected by this cock to the atmosphere, thus relieving the pressure on the plungers. The device was thus spared a large amount of unnecessary wear.

Multiple Thermocouple Installation

After the development tests on the compression-ignition engine had been completed, a device to measure the temperature at five points on an engine piston was constructed for tests of an air-cooled spark-ignition engine. Figure 4 shows the circuit-closing mechanism (including a thermocouple for measuring the temperature in the crankcase) and the piston thermocouple installation. The circuit-closing mechanism is essentially the same as that previously described, with four additional plungers.

In this arrangement, one plunger has a constantan contact and the others have chromel contacts. The mating contacts on the piston are of the same material as the plunger contacts. A constantan wire and a chromel wire are brought from the center of the piston crown to the constantan contact and to one chromel contact, respectively; chromel wires are brought from various points on the piston (fig. 5) to the rest of the contacts. All the wires from the plunger contacts are, of course, brought to the cold junction from which copper leads are brought through a selector switch to the potentiometer. The lead to the chromel wire connected to point 1 is used as the common lead for all measurements, and the leads to the constantan wire and the rest of the chromel wires are attached to the successive contact points on the selector switch.

The temperature at point 1 is obtained from the chromel-constantan thermocouple and the cold-junction-thermometer readings in the usual manner, use being made of the chromel-constantan calibration curve (fig. 6(a)). The temperatures of the other points are obtained by the utilization of the thermoelectric effect between the piston metal and the chromel. The chromel lead from point 1 and the chromel lead from one of the other points, for example point 5, are connected to the potentiometer and the potential difference is obtained. Thus point 1 is the hot junction and point 5 is the cold junction of a chromel-aluminum-alloy thermocouple. The temperature of point 1 being known, the temperature of point 5 can be calculated from the calibration curve of the chromel-aluminum-alloy thermocouple (fig. 6(b)). Calibration of several thermocouples made of different aluminum alloys and chromel showed practically identical temperature-potential relationships.

In order to avoid drilling holes in the piston walls for the many clamps required to hold the thermocouple wires, a grooved duralumin bracket is attached to the wrist-pin boss and the wires are fastened in the grooves. (See fig. 4.) The details of the method of inserting the thermocouple wires in the piston are shown in figure 5. A hole is drilled into the piston to within 3/32 inch of the surface of the piston with a No. 42 drill. At the bottom of this hole, another hole is drilled an additional distance of 1/32 inch with a No. 68 drill. The thermocouple wire with a fused ball end is peened into the smaller hole and an alundum insulator, through which the wire

is passed, is fitted into the larger hole and held in place by upsetting the piston metal into a groove cut in the insulator. From this point to the contacts, the wires are insulated with flexible glass sleeving and encased in copper tubing, as in the previous installation.

MEASUREMENT OF PISTON TEMPERATURE

The apparatus previously described (figs. 1, 2, and 3) was installed on the 5- by 7-inch water-cooled N.A.C.A. compression-ignition cylinder head with displacer piston (reference 8) and the temperature was determined for different engine operating conditions. The circuit-closing mechanism was mounted on a simple bracket in the crankcase and the wires and the copper tubing were led outside through a small hole in the crankcase.

Under conditions of engine operation, balance of the thermocouple electromotive force is quickly obtained, as in the bench test, with a sensitiveness comparable with that obtainable when the potentiometer and its usual galvanometer are used in a continuously closed circuit. The plungers follow the piston without difficulty as the air pressure is increased to compensate for the increase in impact force with engine speed. Although the accuracy of the measurement could be checked only in the bench test, there is no reason to believe that the engine set-up introduced any change. The accuracy is conservatively estimated to be within 2 percent.

Some of the piston temperatures obtained are shown in figure 7, where the temperature of the piston displacer is plotted against fuel quantity injected per cycle for speeds from 1,500 to 2,400 rpm and for various boost pressures up to 25 inches of mercury. The engine conditions for these tests are given in table I.

The high temperatures of this piston displacer are due to the high temperature and velocity of the gases flowing past the corner of the displacer. As previously mentioned, the thermocouple was placed on the exhaust-valve side of the rear corner of this displacer, which from previous experience was known to be the hottest part of the piston. The rapid increase in displacer temperature with engine speed and boost pressure is shown in figure 7.

Preliminary data were also obtained on the piston of an air-cooled cylinder with fuel injection. The equipment previously described was used. (See fig. 4.) The engine had a $6\frac{1}{8}$-inch bore by 7-inch stroke and a compression ratio of 9.2. Figure 8 shows the variation of piston temperatures at the five locations indicated in figure 5 with fuel-air ratio at full throttle and at an engine speed of 1,900 rpm. Curves of brake mean effective pressure and of average head and barrel temperatures are also shown.

The expected increase in piston temperature with increased load and increased head and barrel temperature and the attendant dangers of ring sticking, detonation, and loss in piston strength accompanying these high temperatures indicate the pressing need for an investigation of possible methods of reducing the operating temperatures of pistons.

CONCLUSIONS

1. The measurement of thermocouple electromotive forces in an intermittent circuit by balancing them with a potentiometer provides a practicable and accurate method of obtaining piston temperatures.

2. The accuracy of measurement is unaffected by speed within the range tested, and its dependence on the percentage duration of time of contact may be obviated by the use of a sufficiently sensitive galvanometer for a balance indicator.

3. By the use of pneumatically operated plungers for closing the thermocouple circuit for a few degrees of crank angle at the bottom of the piston stroke, temperature measurements at engine speeds of at least 2,400 rpm can be made.

Langley Memorial Aeronautical Laboratory,
National Advisory Committee for Aeronautics,
Langley Field, Va., April 4, 1939.

REFERENCES

1. Gibson, A. H.: Piston Temperatures in Aero Engines. Rep. No. 13, Light Alloys Sub-Committee, British A.C.A., 1921, pp. 282-298.

2. Gibson, A. H.: Piston Temperatures and Heat Flow in High-Speed Petrol Engines. Proc. Inst. Mech. Eng. (London), vol. I, no. 2, Jan. 1926, pp. 221-249.

3. Riekert, P., and Kuhm, M.: Ein Beitrag zur Kolben- und Kolbenringfrage. Jahrb. 1937, der deutschen Luftfahrtforschung, R. Oldenbourg (Munich), S. II 98-II 102.

4. Suhara, Toyotaro, and Sato, Naozo: On the Distribution and Variation of Temperature in the Cylinder and Piston of an Aircraft Engine. Rep. No. 5 (vol. I,5), Aero. Res. Inst., Tokyo Imperial Univ., Dec. 1922.

5. Mucklow, G. F.: Piston Temperatures in a Solid-Injection Oil-Engine. Proc. Inst. Mech. Eng. (London), vol. 123, July-Dec. 1932, pp. 349-372.

6. Baker, H. Wright: The Operating Temperatures of Cast Iron and Aluminum Pistons in a 12-Inch Bore Oil Engine. Proc. Inst. Mech. Eng. (London), vol. 127, Nov. 1934, pp. 217-243.

7. Baker, H. Wright: Piston Temperatures in a Sleeve Valve Oil Engine. Proc. Inst. Mech. Eng. (London), vol. 135, Jan. 1937, pp. 35-71.

8. Moore, Charles S., and Foster, Hampton H.: Boosted Performance of a Compression-Ignition Engine with a Displacer Piston. T.N. No. 569, N.A.C.A., 1936.

TABLE I

MEASUREMENTS OF PISTON-DISPLACER TEMPERATURES MADE ON

A WATER-COOLED COMPRESSION-IGNITION ENGINE

Engine speed (rpm)	Boost pressure (in. Hg)	bmep (lb/sq in.)	Horse-power	Quantity of fuel (lb/cycle)	Temperature (°F)
1,500	0	72.0	18.75	1.90×10^{-4}	430
1,500	0	57.6	15.0	1.45	402
1,500	0	92.2	24.0	2.70	481
1,500	0	108.0	28.1	3.79	500
1,500	0	114.6	29.8	4.77	485
2,000	0	75.9	26.35	1.84	495
2,000	0	63.4	22.0	1.59	468
2,000	0	54.2	18.75	1.52	465
2,000	0	70.2	24.30	1.78	490
2,000	0	83.2	28.80	2.09	507
2,000	0	75.7	26.75	1.93	495
2,000	0	102.0	35.20	2.94	550
2,000	0	118.5	41.00	4.17	580
2,000	15	187.0	64.7	5.65	710
2,000	15	158.5	55.0	3.73	635
2,000	15	105.0	36.3	2.32	540
2,000	20	112.0	38.8	2.54	575
2,000	20	166.0	57.2	3.65	665
2,000	20	193.0	66.8	5.36	735
2,000	20	204.0	70.8	6.40	765
2,200	20	128.5	49.0	2.88	633
2,200	20	171.0	65.2	3.72	690
2,200	20	201.0	76.4	6.02	791
2,400	20	128.5	53.4	2.82	635
2,400	20	177.0	73.5	4.30	745
2,400	20	195.5	81.4	6.08	798
2,400	25	131.0	54.6	2.90	625
2,400	25	186.0	77.4	4.33	720
2,400	25	209.0	86.4	6.35	835

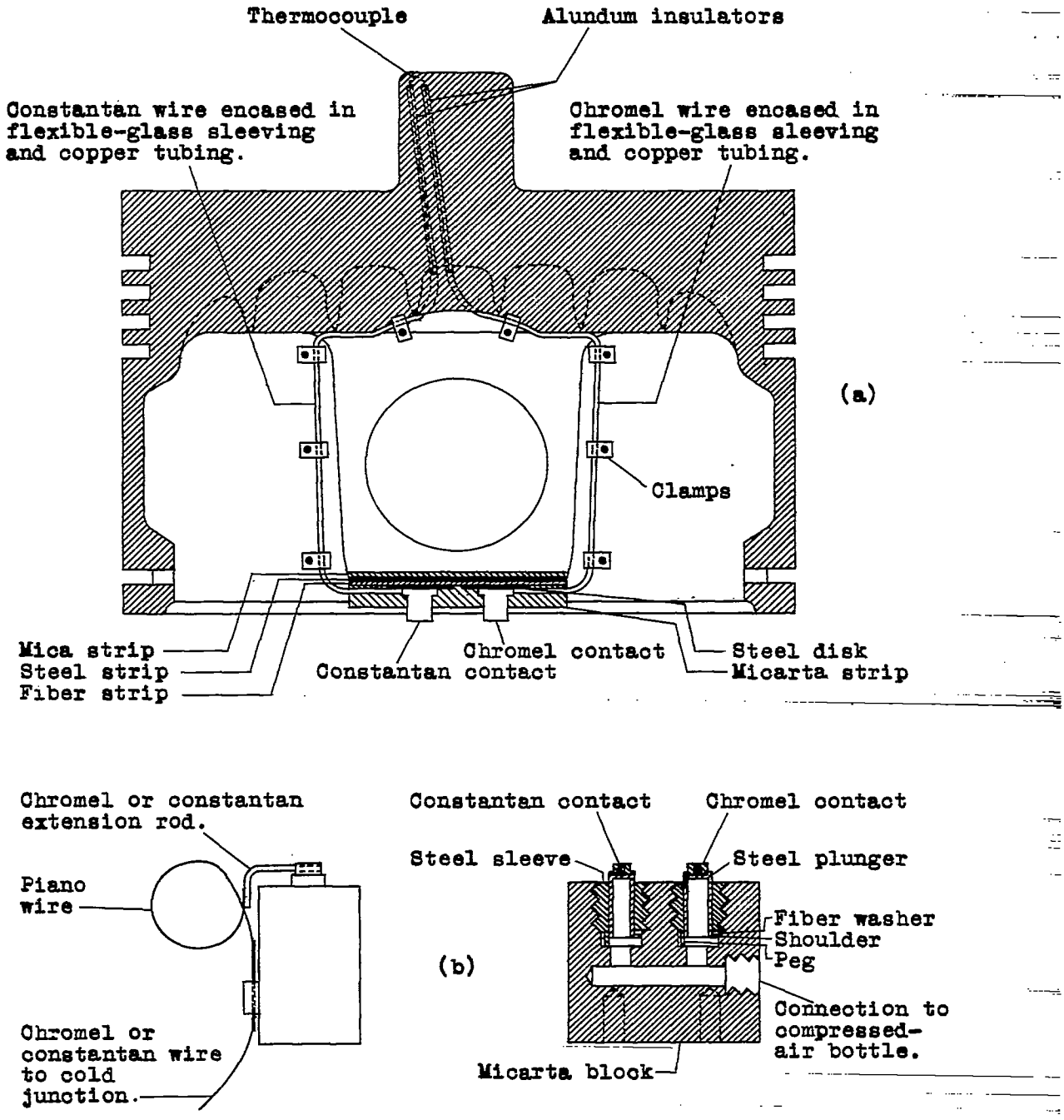

Figure 1.- Thermocouple installation on displacer-type piston and circuit-closing mechanism.

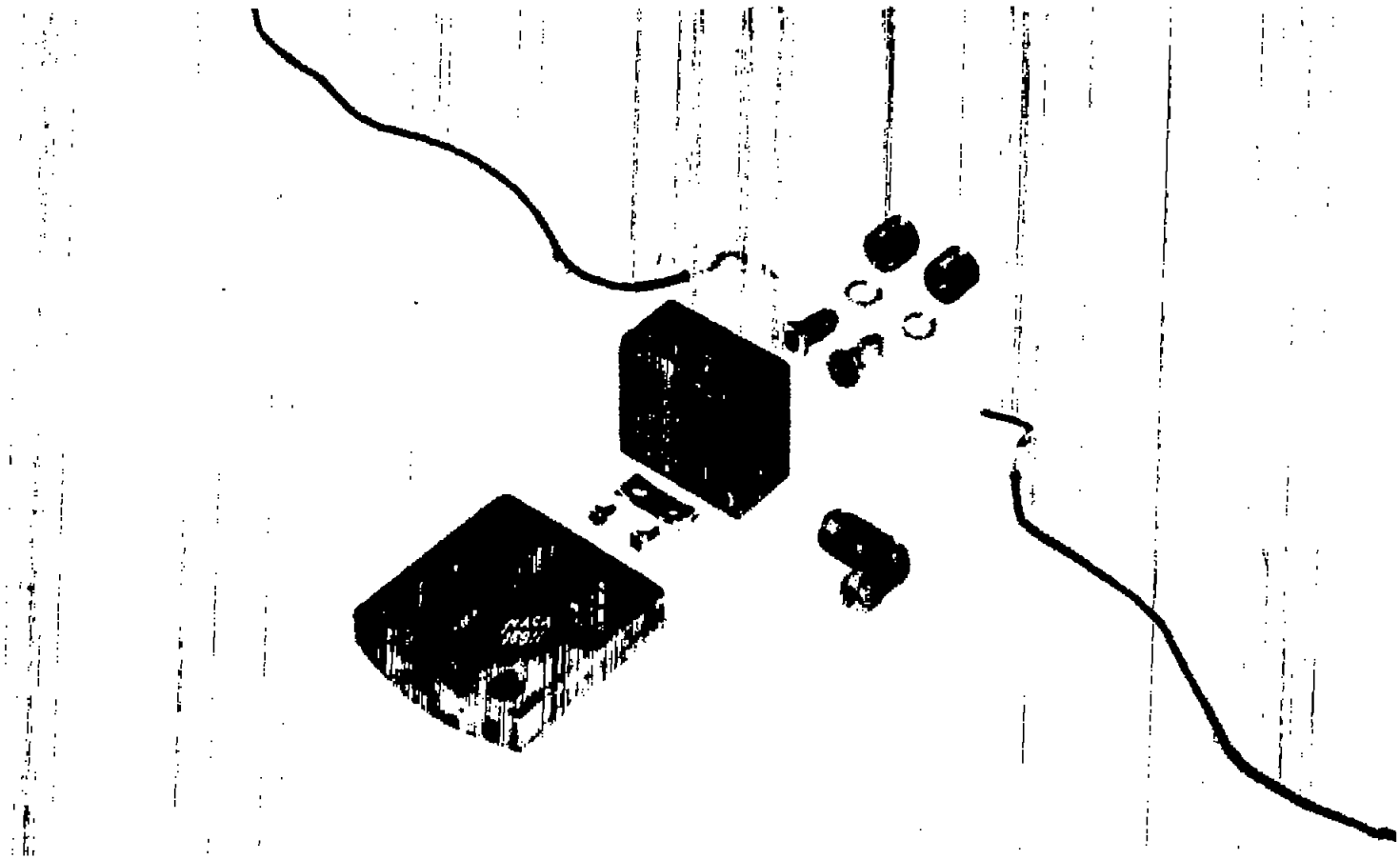

Figure 2.- Parts of circuit-closing mechanism for single thermocouple installation.

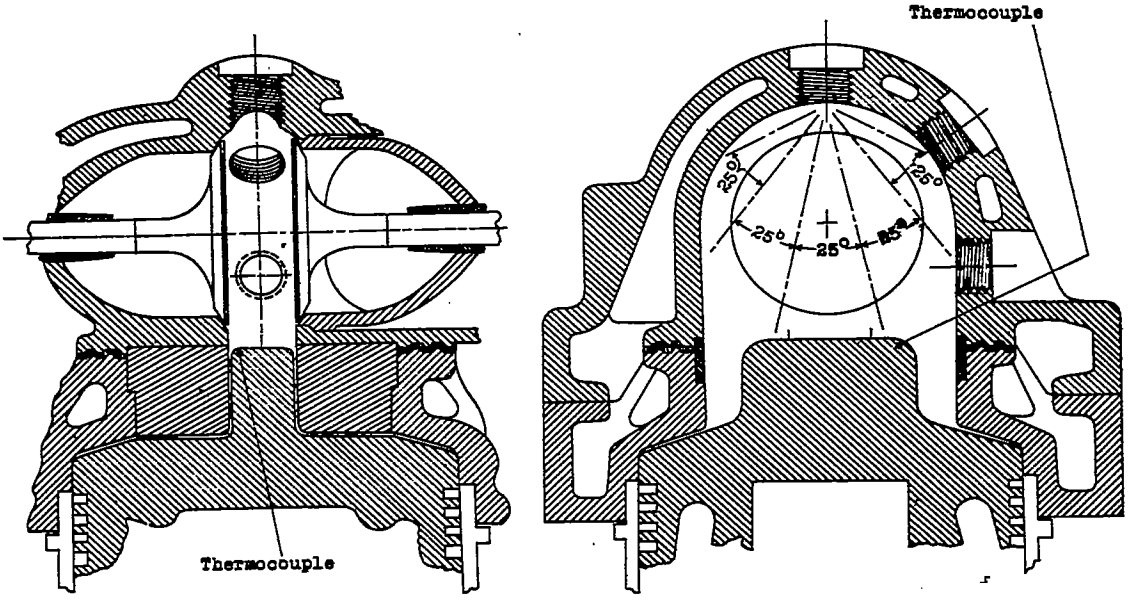

Figure 3.- Arrangement of cylinder head and displacer piston of compression-ignition engine with location of thermocouple.

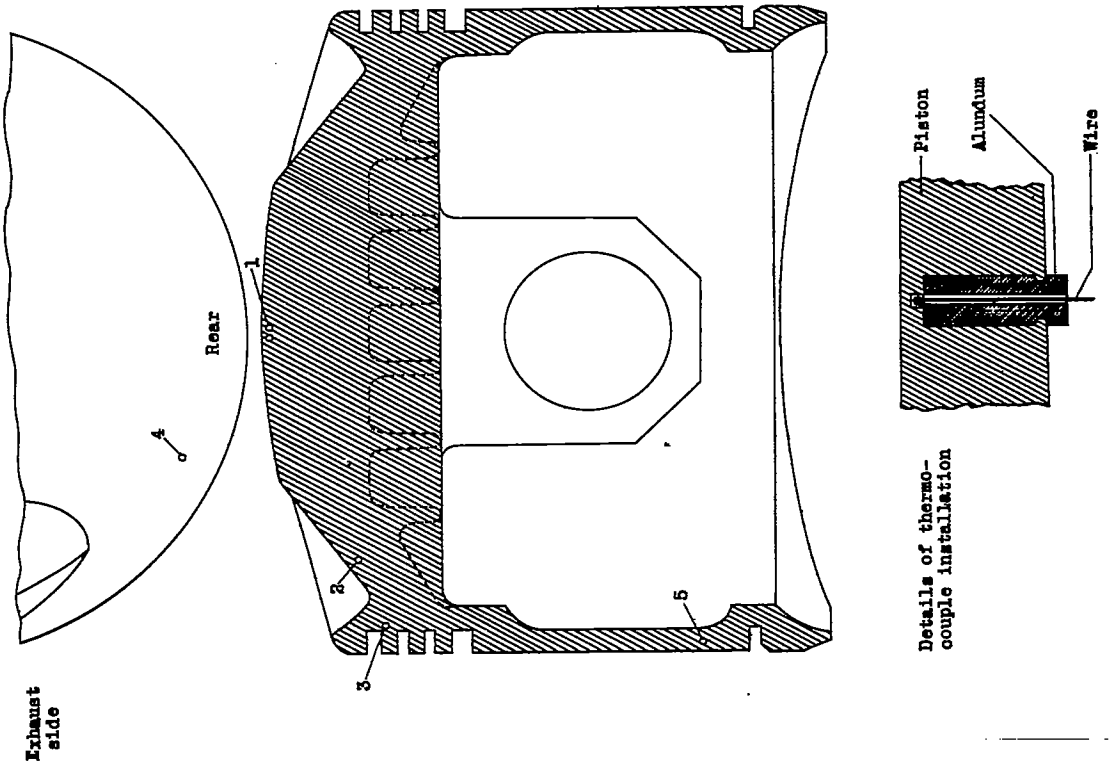

Figure 5.- Location of thermocouples in piston of air-cooled engine.

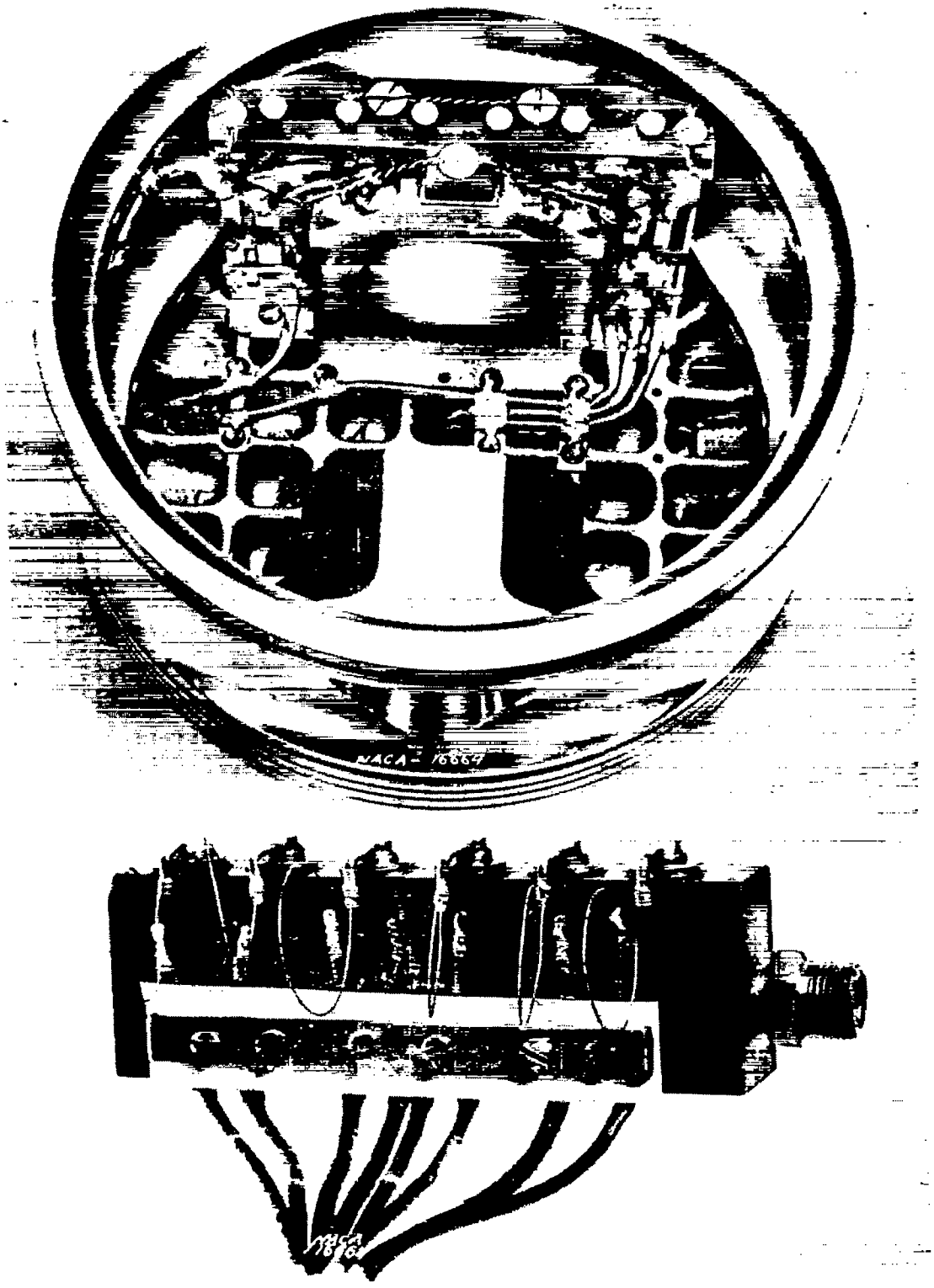

Figure 4.- Thermocouple instillation in piston of air-cooled engine and corresponding circuit-closing mechanism.

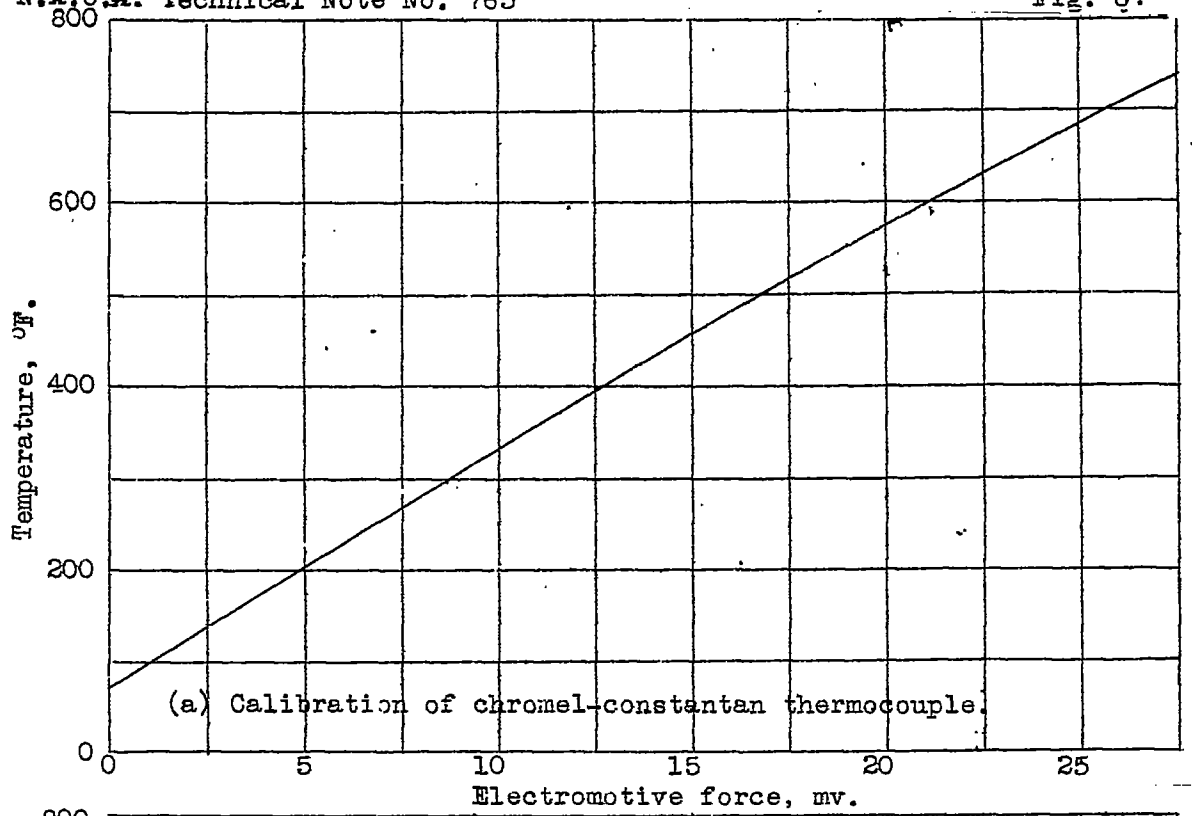

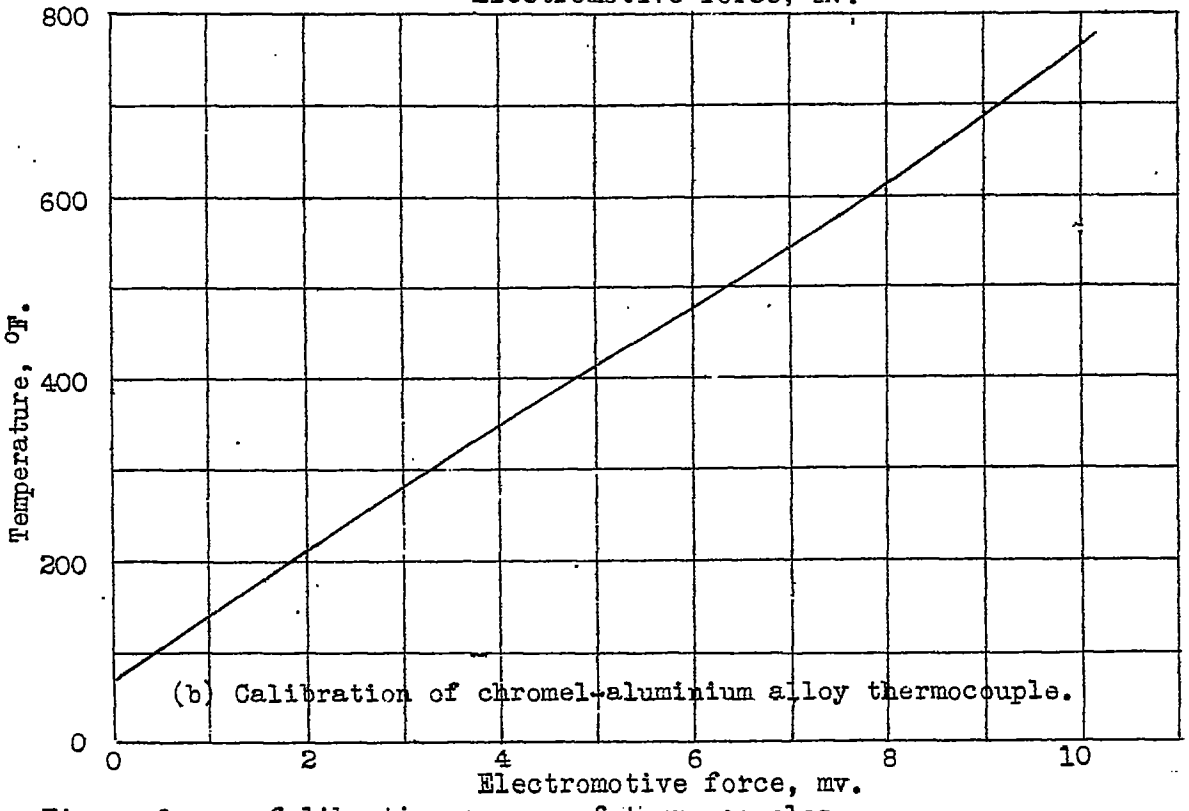

Figure 6.— Calibration curves of thermocouples.

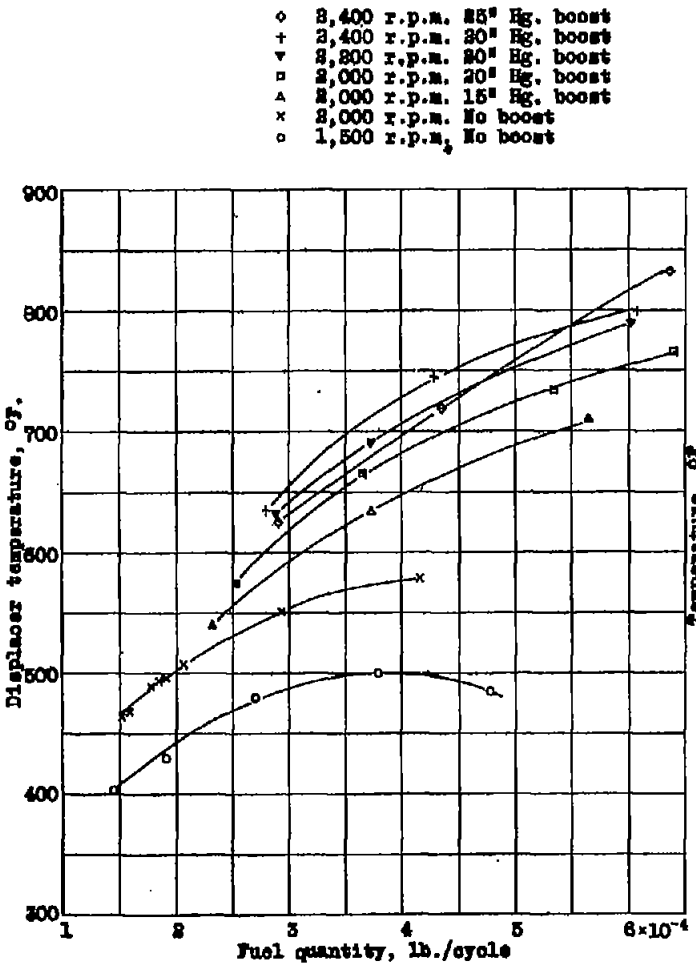

Figure 7.- Piston-displacer temperature for variation in fuel quantity, engine speeds, and manifold pressure. Water-cooled compression-ignition engine.

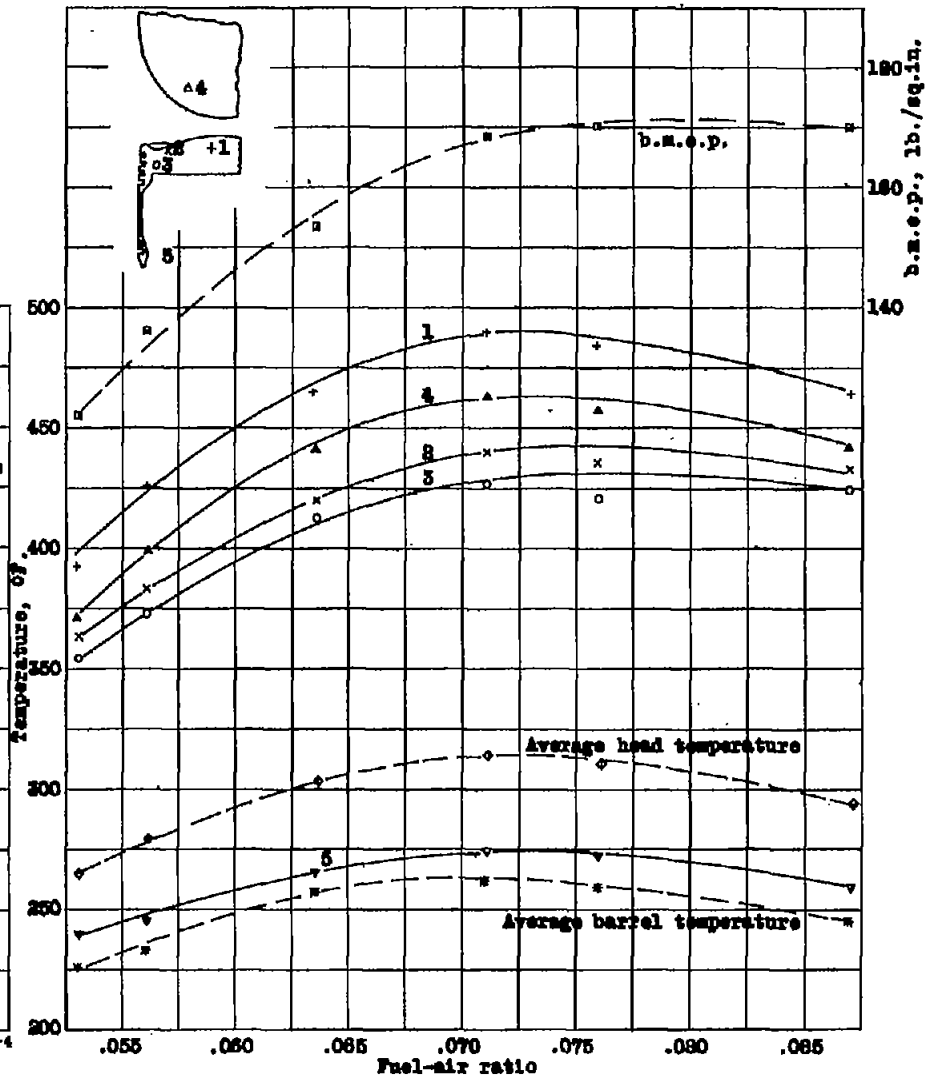

Figure 8.- Variation of piston temperature with fuel-air ratio. Air-cooled engine; fuel injection; full-throttle engine speed, 1,900 r.p.m.