NACA
CLASSIFICATION CANCELLED

AUG 3 1940

RESTRICTED

TECHNICAL NOTES

NATIONAL ADVISORY COMMITTEE FOR AERONAUTICS

3 1176 00085 1429

No. 769

SPIN TESTS OF A LOW-WING MONOPLANE IN FLIGHT AND IN THE FREE-SPINNING WIND TUNNEL

By Oscar Seidman and William H. McAvoy
Langley Memorial Aeronautical Laboratory

To be returned to
the files of the Langley
Memorial Aeronautical
Laboratory.

Washington
July 1940

NATIONAL ADVISORY COMMITTEE FOR AERONAUTICS

TECHNICAL NOTE NO. 769

SPIN TESTS OF A LOW-WING MONOPLANE IN FLIGHT AND IN THE FREE-SPINNING WIND TUNNEL

By Oscar Seidman and William H. McAvoy

SUMMARY

Comparative full-scale and model spin tests were made with a low-wing monoplane in order to extend the available information as to the utility of the free-spinning wind tunnel as an aid in predicting full-scale spin characteristics.

For a given control disposition the model indicated steeper spins than were actually obtained with the airplane, the difference being most pronounced for spins with elevators up. Recovery characteristics for the model, on the whole, agreed with those for the airplane, but a disagreement was noted for the case of recovery with elevators held full up. Free-spinning wind-tunnel tests are a useful aid in estimating spin characteristics of airplanes, but it must be appreciated that model results can give only general indications of full-scale behavior.

INTRODUCTION

Because of lack of detail on the model and such wind-tunnel effects as low Reynolds Number, the model spin-test results from the N.A.C.A. free-spinning wind tunnel might be expected to differ somewhat from the corresponding full-scale results. The reasons for these differences are discussed in reference 1. In order to assist in the prediction of spin characteristics in flight, a study is being made of the agreement between model and flight results.

Reference 2 gives a fairly complete comparison between model and full-scale spin characteristics for two biplanes. From the comparison it was felt that, although the tests of the models of the two biplanes gave good approximations to the spin characteristics of the full-scale airplanes,

definite conclusions should be reserved until similar tests had been made of other models, particularly of various monoplane types.

The present paper gives the results of similar, though less extensive, tests of a low-wing monoplane furnished by the Army Air Corps. The wind-tunnel tests were made with a 1/16-scale dynamic model of the airplane.

AIRPLANE AND MODEL

The airplane is a service-type low-wing monoplane with fixed landing gear (fig. 1). For the flight tests, the airplane was loaded to the weight of 4,340 pounds. No observer was carried, but batteries and instruments for recording spin characteristics were placed in the observer's cockpit. An additional 100 pounds of ballast was placed in the baggage compartment to bring the weight and the center-of-gravity location to specified values. The actual mass distribution was experimentally determined by the method described in reference 3.

Before the spin tests were started, the rudder deflection was increased from the normal 29.5° to 35° to improve the effectiveness of this control.

In the preliminary spin tests, the pilot experienced difficulty in reversing the rudder owing to high rudder-pedal forces. These forces were reduced by altering the original rudder horn of the airplane as shown in figure 2. The alteration increased the arm of the rudder cable about the rudder hinge so that the pedal force required for a given rudder hinge moment was reduced 38 percent at full deflection. Blocks were also attached to the rudder pedals to permit the pilot to exert his maximum effort when the pedal was in its most forward position.

The 1/16-scale dynamic free-spinning model was constructed of balsa and ballasted with lead weights to simulate the airplane as spun. Figure 3 is a line drawing of the model with the dimensions of the full-scale airplane. The values of model weight, center-of-gravity location, and moments of inertia were experimentally determined as described in reference 2. A clockwork delay-action mechanism was installed to operate the controls during the spin. Control displacements were the same as those used in the

airplane. In recovery tests, the model controls were always quickly moved from the initial to the final position, although a quick movement was not always used for the flight tests.

Several other differences existed between the airplane and the model tests. The airplane spins were all performed with the front canopy open but most of the model tests were made with the canopy closed. Several model check spins with the canopy open showed little effect on the steady spin or on recovery. The speed of the airplane engine was throttled to about 900 rpm during all spins. The propeller was not simulated on the model. In accordance with practice in the free-spinning wind tunnel, the tail wheel was removed from the model for all tests. This condition tends to make the model results more conservative.

The model and the airplane loading conditions corresponded to the following full-scale mass distribution (model at 7,000 feet equivalent altitude):

Weight	4,340 lb
x/c	0.248
z/c	0.126
A	2,479 slug-ft^2
B	3,876 slug-ft^2
C	5,776 slug-ft^2

where x/c is the ratio of the distance of the center of gravity back of the leading edge of the mean aerodynamic chord to the mean aerodynamic chord and z/c is the ratio of the distance of the center of gravity below the thrust line to the mean aerodynamic chord.

TESTS AND RESULTS

A description of the full-scale spin-test technique, the methods used for reduction of data, and the precision of results is given in reference 4. It is of some interest to note that, for the present tests, the accuracy of determination of control settings was improved by the use

of two control-position recorders; in addition to the recorder of aileron position in the cockpit, a separate instrument for recording rudder and elevator position was located in the rear of the fuselage to eliminate the effect of stretch in the cables. The limits of error noted in reference 4 may be exceeded in cases where the spins are of a wandering or an oscillating nature or where, for other reasons, the evaluation of the records is difficult.

The tests consisted of two parts: the determination of steady-spin characteristics and the determination of recovery characteristics. The program as originally planned was intended to show the effects of systematic variations in setting of each of the three controls on steady-spin characteristics and the effects of various types of control manipulation on recovery characteristics. Because of the desire to reduce the number of flight tests to a minimum, the results are not so complete as had been expected, especially for the steady-spin characteristics. Complete records were obtained for six steady spins, five right and one left, and for 12 recovery conditions. For some recovery tests, the maximum rudder-pedal force exerted by the pilot in recovery was measured with an indicating force recorder installed on the pedal.

A detailed description of the model-test technique, the methods for reduction of data, and the precision of results is given in reference 2. The limits of error noted for the model tests may be exceeded in cases where the spins are of a wandering or an oscillating nature or where, for other reasons, evaluation of the records is difficult.

The model tests were made after the full-scale tests had been completed and simulated the control positions and the control manipulations obtained in flight. Model-test results were obtained for every condition for which full-scale results had been obtained, except for one control disposition.

Table I shows the maximum control displacements. Results for both model and full-scale tests are presented in tables II and III.

COMPARISON OF AIRPLANE AND MODEL CHARACTERISTICS

Steady Spins

Tests 9, 10, and 11A showed that, for the airplane, with the rudder with the spin and the ailerons approximately neutral, the primary effect of moving the elevators from full up to positions in the neighborhood of neutral is to increase the angular velocity Ω. There was little change in angle of attack α or in rate of descent V.

Spins with rudder and ailerons approximately neutral and elevators full up or one-third up (tests 12A and 12B) were oscillatory and steep with high rates of descent. When the elevators were moved full down, a gradual recovery resulted and the motion became a nose-down spiral.

For rudder and elevators full with the spin, setting the ailerons either way from neutral (tests 11B and 13B) made the spin oscillatory with a slight increase in the rate of descent.

The left spin for the normal control positions had a higher vertical velocity than the right spin. For elevators slightly above neutral, the agreement with the right spin was good for α and β, but the vertical velocity was again somewhat higher than for the corresponding right spin.

The data in table II indicate that, for a given control setting, the model spins from 5° to 15° steeper, descends from 20 to 70 feet per second (full-scale) faster, and shows 10° to 15° more outward sideslip than the airplane. The value of $\Omega b/2V$ is lower for the model than for the airplane for right spins but it is in agreement for the left spin. The model spin becomes appreciably steeper for elevators up but the airplane spin is only slightly affected, which makes the differences between model and airplane characteristics increase for spins with elevators up.

A spin was obtained with the model for every control setting where it was obtained for the airplane except for the case with rudder and ailerons neutral and elevators partly raised. For this condition, the model autonatically recovered although it was launched in the tunnel with initial rotation and in a spinning attitude.

The left spins of the model did not quite check the right spins, which may be partly due to differences in aileron settings and partly due to asymmetry resulting from recurrent damage and repair to the model. The difference between the left and the right spins of the model was not so marked as the difference between the left and the right spins of the airplane.

The comparison indicates that the model requires effectively more rudder with the spin and smaller elevator-up deflections in order to simulate full-scale results.

The agreement between model and airplane steady-spin characteristics for a low-wing monoplane is similar to that previously obtained for two biplanes but the increased discrepancy for elevators up was more marked in the present tests.

Recoveries

By complete reversal of both controls from full with to full against the spin (rudder from full right to full left, elevator from full up to full down), the airplane recovered in $1\frac{1}{4}$ to $1\frac{3}{4}$ turns from a right spin and slightly faster from a left spin. Model recoveries were about 1/2 turn faster. For recovery by rudder reversal with elevators neutral or down, the model results also closely approximated those for the airplane. An anomaly occurred for the case of rudder reversal with elevators held full up. The model indicated rapid recovery; whereas, the airplane failed to recover from the right spin for four turns, after which recovery was effected by reversal of the elevators (moved from full up to full down). It will be recalled in this connection that considerable discrepancy was shown between the model and the full-scale steady-spin characteristics for elevators up. The corresponding left spin of the airplane, however, gave recovery in about two turns with elevators held up. Supplementary tests indicated that, in order to get a correspondingly slow recovery for the model with elevators held up, it was necessary to increase the mass distribution along the fuselage and either to decrease rudder deflection against the spin or to install moderate washin of the entire right wing in a right spin. The effects of aileron displacements were slight for both model and airplane.

In several recoveries, the maximum rudder-pedal forces required to reverse the rudder were measured. Forces up to 250 pounds were noted, which corresponded to a pedal force of 400 pounds for the unmodified rudder horn. This force was noted during the period of maximum acceleration of the rudder, and the pilot felt that the final force to hold the rudder hard over would have been somewhat less. Although reference 5 shows that a maximum of 400 pounds can be applied by the average pilot when he is properly located in relation to the pedals, it appears that such a force is excessive for recovery from spins.

Turns for recovery for the model for the same control manipulation were generally in agreement with or slightly faster than the corresponding turns for the airplane; this result is substantially similar to that previously obtained for two biplanes.

Discussion

It is appreciated that model results cannot be expected to check full-scale results more closely than the agreement between left and right spins of a symmetrically rigged airplane with propeller stopped or more closely than the check between two different airplanes built from the same set of drawings. The most that can be expected of model spin tests is an indication as to whether the airplane will be definitely slow to recover, will be a borderline case, or will recover quickly.

The discrepancy between model and full-scale results can be attributed to one or more of the following causes:

(a) Scale effect.

(b) Propeller-couple and slipstream effect.

(c) Method of control manipulation.

It is felt that further research to determine the nature and importance of these effects on both the airplane and the model is warranted. Another interesting point not yet explained is the apparent ineffectiveness of the rudder for elevator full up (on the airplane) in spite of the high rudder force.

CONCLUSIONS

1. The present comparison indicates a correlation between model and full-scale spin-test results for a low-wing monoplane similar to that previously found for two biplanes.

2. For a given control setting, the model spins steeper with more outward sideslip and a higher rate of descent than the airplane.

3. The model results appear to overestimate the effectiveness of the rudder in aiding recovery but, in general, the turns for recovery of the model afford useful indications of the full-scale results for a given control manipulation.

Langley Memorial Aeronautical Laboratory,
National Advisory Committee for Aeronautics,
Langley Field, Va., November 28, 1938.

REFERENCES

1. Bamber, M. J., and House, R. O.: Spinning Characteristics of the XN2Y-1 Airplane Obtained from the Spinning Balance and Compared with Results from the Spinning Tunnel and from Flight Tests. T.R. No. 607, N.A.C.A., 1937.

2. Zimmerman, C. H.: Preliminary Tests in the N.A.C.A.. Free-Spinning Wind Tunnel. T.R. No. 557, N.A.C.A., 1936.

3. Soulé, Hartley A., and Miller, Marvel P.: The Experimental Determination of the Moments of Inertia of Airplanes. T.R. No. 467, N.A.C.A., 1933.

4. Scudder, N. F., and Seidman, Oscar: A Flight Investigation of the Spinning of the F4B-2 Biplane with Various Loads and Tail Surfaces. T.R. No. 529, N.A.C.A., 1935.

5. Gough, M. N., and Beard, A. P.: Limitations of the Pilot in Applying Forces to Airplane Controls. T.N. No. 550, N.A.C.A., 1936.

TABLE I - MAXIMUM DISPLACEMENTS

[U, upward; D, downward]

Rudder		Elevator		Ailerons			
				Full right		Full left	
Full right	Full left	Full up	Full down	Right	Left	Right	Left
34.5°	35.5°	26.5°	22.7°	29°U	16°D	13°D	32°U

TABLE II - COMPARISON OF AIRPLANE AND MODEL DATA

Steady Spins for the Airplane with Normal Loading

[P, airplane; M, model; W, with spin; A, against spin; U, upward; D, downward; N, neutral; F, full control movement; CPR, control-position recorder. Where the symbols FD (full down) and N are used, the flight results were not verified by a CPR record. The model settings for such a case correspond to the table of maximum displacements.]

Test	Direction of spin	[a]Control settings (deg)				α (deg)		[c]β (deg)		[d]Velocity (fps)		[d]Radius (ft)		$\frac{\Omega b}{2V}$	
		[b]Ailerons		Rudder	Elevator										
		Right	Left			P	M	P	M	P	M	P	M	P	M
10	Right	2.0U	0.5D	34.5W	26.0U	45	30	1	-14	117	165	3.9	5.9	0.44	0.39
9	. do .	.5D	2.5U	34.5W	6.5U	43	35	-4	-16	115	151	3.2	3.6	.60	.50
11A	. do .	.0D	2.0U	34.5W	5.5D	45	41	-6	-15	121	143	3.0	3.2	.57	.50
	. do .	.0D	2.0U	34.5W	5.5D	-	[e]41	-	-13	-	144	-	3.6	-	.47
12A	. do .	.5D	2.5U	3.5W	25.5U	(f)	[g]35	-	-14	142	154	-	4.9	-	.42
12B	. do .	2.5D	5.0U	.5W	9.5U	[h]34	(i)	-2	-	150	-	3.7	-	.46	-
13A	. do .	N		N	FD	(i)	(i)	-	-	-	-	-	-	-	-
13B	. do .	12.5D	27.5U	34.5W	26.0U	[h]38	(h)	-11	-	126	200	4.9	-	.44	-
11B	. do .	12.5U	9.5D	34.5W	26.5U	(h)	[h]26	-	-7	125	200	-	6.7	-	.33
15A	Left	1.5D	3.5U	35.5W	26.5U	(h)	34	-	7	137	156	-	6.0	-	.38
15B	. do .	3.0D	5.5U	35.5W	6.0U	44	[h]31	3	14	128	154	3.6	4.3	.46	.48

[a]Where numerical values are given, the airplane control settings were measured by means of a CPR. Fluctuations in airplane control settings amounting to a few degrees occurred in some cases.

[b]These aileron settings differ slightly from normal settings for this airplane as a result of previous damage to the right wing tip.

[c]Inward sideslip is considered positive in a right spin and negative in a left spin.

[d]Model radius of spin and rate of descent expressed as full-scale equivalent.

[e]Model front canopy open. Otherwise model front canopy closed, airplane front canopy open.

[f]Spin too oscillatory for records.

[g]Model also gave much steeper spins.

[h]Oscillatory.

[i]Would not spin.

TABLE III - COMPARISON OF AIRPLANE AND MODEL DATA

Recoveries for the Airplane with Normal Loading

[P, Airplane; M, model; W, with spin; A, against spin; U, upward; D, downward; N, neutral; F, full control movement; CPR, control-position recorder. Where symbols FW (full with) etc. are used, the flight results were not verified by a CPR record. The model settings for such a case correspond to the table of maximum displacements.]

Test	Direction of spin	[a]Control positions (deg)								[c]Turns for recovery	
		[b]Ailerons				Rudder		Elevator			
		Initial		Final							
		Right	Left	Right	Left	Initial	Final	Initial	Final	P	M
10	Right	N		N		FW	FA	FU	FD	$1\frac{1}{2}$, $1\frac{3}{4}$	1, 1/2, d_1
16A										$1\frac{1}{4}$, $1\frac{1}{4}$	
15A	Left	N		N		FW	FA	FU	FD	1, $1\frac{1}{4}$	1/2, 1/2
20A										3/4, 7/8	
16B	Right	N		N		FW	FA	FU	FU	e>4, e>$4\frac{1}{2}$	3/4, 3/4. d_1, d_1
20B	Left	N		N		FW	FA	FU	FU	$f_{1\frac{3}{4}}$, $f_{2\frac{1}{2}}$	1, 1/2
16C	Right	N		N		FW	FA	N	N	$1\frac{1}{2}$, $1\frac{3}{4}$	$1\frac{1}{4}$, $1\frac{1}{4}$, $d_{1\frac{1}{4}}$, d_1
16D	.do..	N		N		FW	FA	FD	FD	$1\frac{1}{2}$, $1\frac{1}{2}$	$1\frac{1}{2}$, $1\frac{1}{2}$
17B	.do..	1U	[g]1U	1U	1U	22W	[g]16A	9U	9U	$h, i_{2\frac{1}{8}}$ $h, i_{2\frac{3}{4}}$	1, 1, $1\frac{1}{2}$
19A	.do..	1U	[g]1U	26U	15D	34.5W	35A	7U	7U	$j, k_{1\frac{1}{4}}$	$1\frac{1}{4}$, 1
21A	Left	1U	1U	13D	32U	35W	34.5A	[g]0	0	$1\frac{1}{4}$, $1\frac{1}{2}$	$1\frac{1}{4}$, 3/4
21B	.do..	1U	1U	29U	16D	35W	34.5A	[g]0	[g]0	$1\frac{3}{4}$, $2\frac{1}{2}$	1, 3/4
18A	Right	FW		FW		FW	FA	N	N	$^{l}1\frac{3}{8}$ $^{l}1\frac{1}{2}$	$1\frac{1}{4}$, $1\frac{1}{4}$
18B	.do..	FA		FA		FW	FA	N	N	$^{l}1$, $^{l}1\frac{1}{4}$	1, 3/4

[a]Where mumerical values are given, the airplane control settings were measured by means of a CPR. Fluctuations in airplane control settings amounting to a few degrees occurred in some cases.
[b]These aileron settings differ slightly from normal settings for this airplane as a result of previous damage to the right wing tip.
[c]Except as noted, all control movements were rapid and simultaneous.
[d]Model front canopy open. Otherwise model front canopy closed, airplane front canopy open.
[e]No recovery in turns indicated.
[f]Effort required to hold stick back during recovery.
[g]Airplane control settings fluctuate from indicated positions by as much as ±5°.
[h]Slower rudder reversal.
[i]Maximum rudder-pedal force in recovery approximately 190 lb.
[j]Slower aileron movement.
[k]Maximum rudder-pedal force in recovery approximately 230 lb.
[l]Maximum rudder-pedal force in recovery approximately 250 lb.

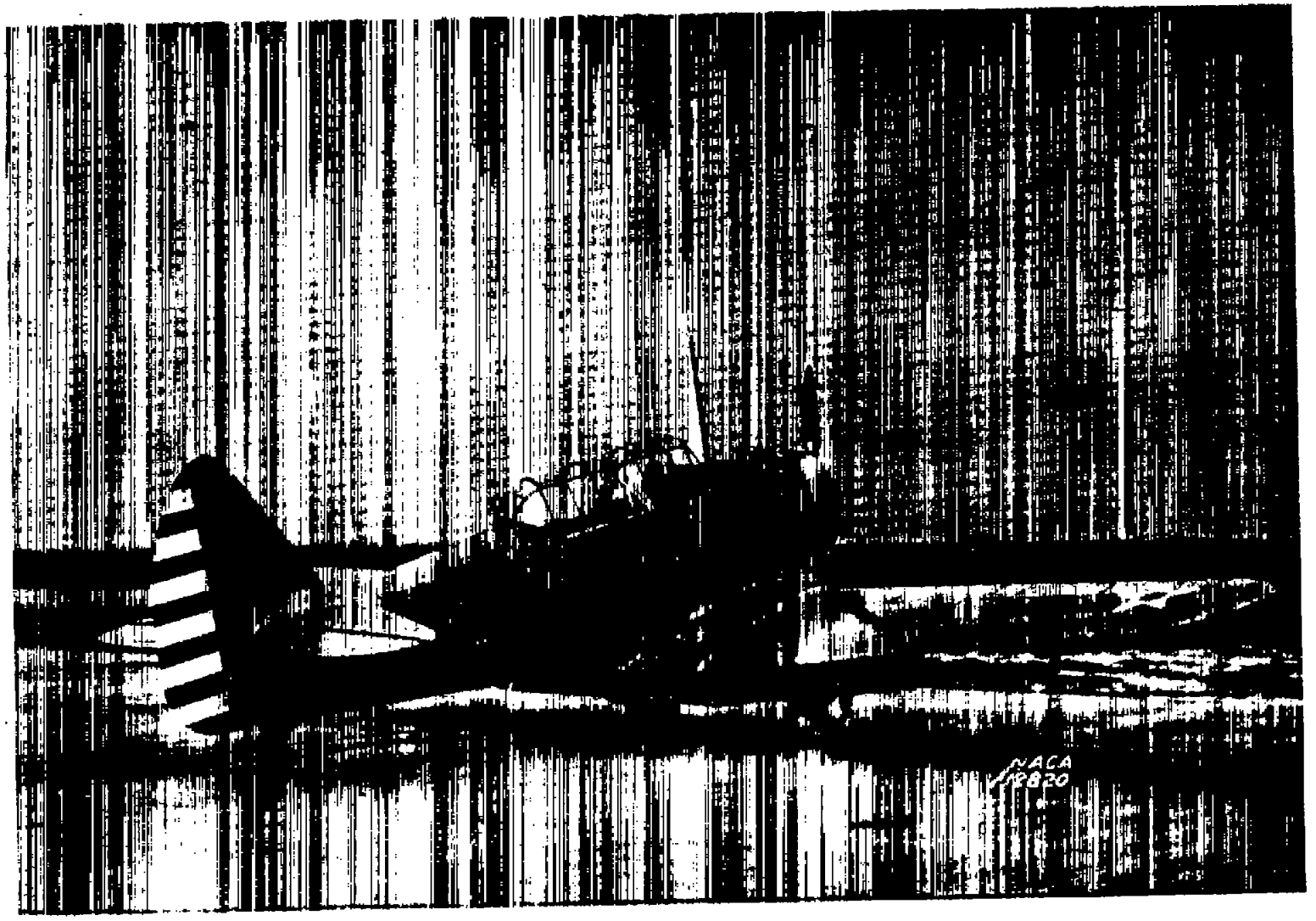

Figure 1.- Three-quarter rear view of airplane.

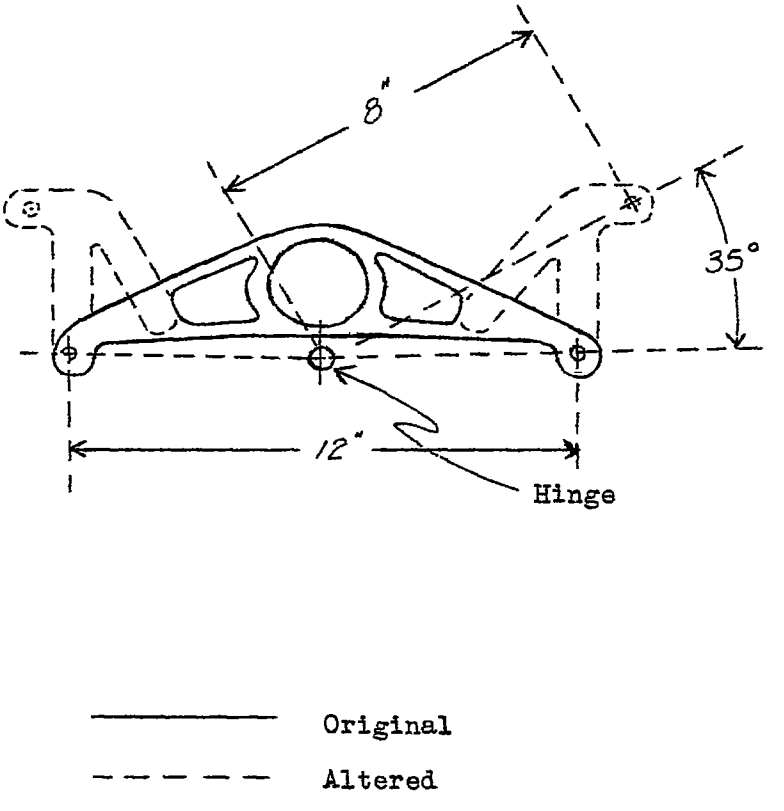

Figure 2.- Modified rudder horn for airplane.

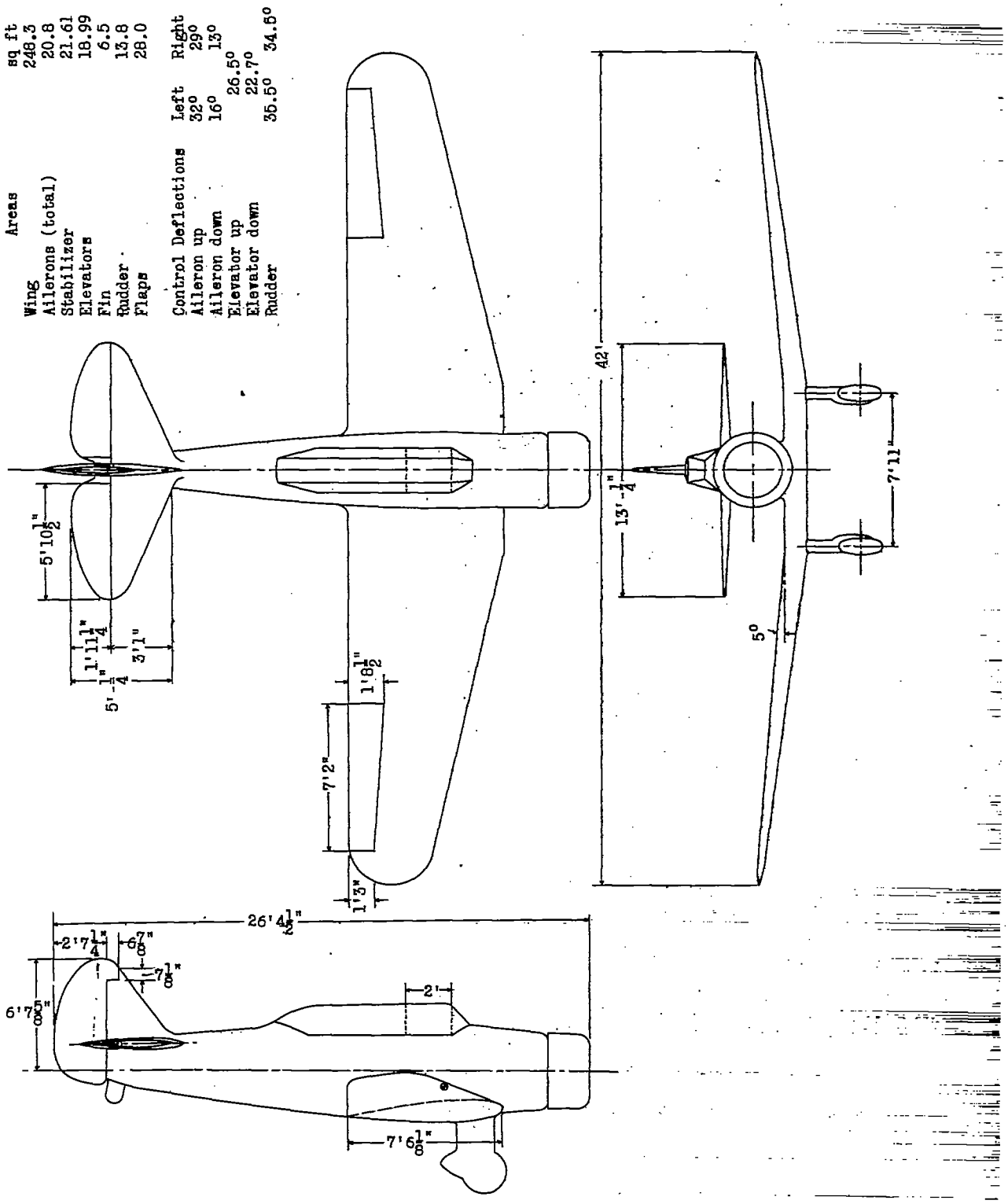

Figure 3.- Three-view drawing of the 1/16 scale model of the airplane. (Dimensions are for full-scale airplane.)