This document contains classified information affecting the National Defense of the United States within the meaning of the Espionage Act, USC 50:31 and 32. Its transmission or the revelation of its contents in any manner to an unauthorized person is prohibited by law. Information so classified may be imparted only to persons in the military and naval Services of the United States, appropriate civilian officers and employees of the Federal Government who have a legitimate interest therein, and to United States citizens of known loyalty and discretion who of necessity must be informed thereof.

APR 21 1941

RESTRICTED

TECHNICAL NOTES

NATIONAL ADVISORY COMMITTEE FOR AERONAUTICS

No. 770

FOR REFERENCE

NOT TO BE TAKEN FROM THIS ROOM

THE LATERAL STABILITY OF EQUAL-FLANGED ALUMINUM-ALLOY I-BEAMS SUBJECTED TO PURE BENDING

By G. Dumont and H. N. Hill
Aluminum Company of America

LIBRARY COPY

JUL 9 1981

LANGLEY RESEARCH CENTER
LIBRARY, NASA
HAMPTON, VIRGINIA

Washington
August 1940

3 1176 01433 7514

NATIONAL ADVISORY COMMITTEE FOR AERONAUTICS

TECHNICAL NOTE NO. 770

THE LATERAL STABILITY OF EQUAL-FLANGED ALUMINUM-ALLOY I-BEAMS SUBJECTED TO PURE BENDING

By C. Dumont and H. N. Hill

SUMMARY

Equal-flanged beams of a special extruded I-section of 27ST aluminum alloy were tested in pure bending. Complete end fixity was not attained. Loading was continued until a definite maximum value had been reached. Tensile tests were made on specimens cut from the flanges and the web of each beam. Compressive stress-strain characteristics were determined by pack compression tests on specimens cut from the flanges.

Values computed from an equation previously suggested by one of the authors for the critical stress at which such beams become unstable were found to be in good agreement with values computed from experimentally determined critical bending moments.

INTRODUCTION

Under certain conditions of loading and restraint, sidewise buckling of beams occurs in much the same way that column failures occur in members subjected to direct compression. The problem of lateral instability of I-beams having flanges of equal width has been solved by Dr. Timoshenko, who has derived (references 1 and 2) expressions for the critical bending moment for various conditions of loading and restraint. Timoshenko's general solution of lateral buckling of I-beams has been extended to cover buckling at stresses beyond the elastic range and the solution has been simplified and presented in such a form as can be easily applied by the designing engineer. (See reference 3.) Many tests have been made in which I-beams failed by lateral buckling. In most of these tests, however, exact conditions of restraint were not known and, consequently, no satisfactory correlation could be obtained between the test results and theoretical solutions.

In a previous report (reference 4) the results of tests to study the lateral instability of unequal-flanged I-beams, such as used in deck-house construction, were presented. The results of these tests were in fair agreement with the theoretical results for fixed-end beams, but there was some evidence that under the test conditions the ends of the beams were something less than completely fixed. Furthermore, because of the unequal-flange widths it was impossible to make a satisfactory study of the lateral buckling in the plastic range and because of this, it was decided to make similar tests using a somewhat lighter equal-flanged I-section. It was believed that a greater degree of end fixity could be achieved with these lighter sections and, furthermore, that in those cases in which buckling occurred above the proportional limit of the material, it would be possible to evaluate the effective reduced modulus.

The purpose of this investigation was to study the lateral stability of equal-flanged I-beams subjected to pure bending with the ends of the beams restrained against bending in a lateral direction. The tests were such as to produce lateral buckling in both the elastic and the plastic range of the material and are intended to serve as an experimental check of the correctness and the adequacy of the theoretical solutions of the problem.

MATERIAL

A cross section of the special extruded 27ST I-section employed for this investigation is shown in figure 1. Both nominal and average measured dimensions are given. Section elements based on the average measured dimensions are also given in this figure. Aluminum alloy 27ST was chosen for this investigation primarily because experience has indicated that there is no appreciable difference between its tensile and compressive yield strength, and secondly because of its relatively wide elastic range. Tensile tests were made on specimens cut from the flanges and the web of each beam and the compressive stress-strain characteristics of the material were determined by pack compression tests (reference 5) on specimens cut from the flanges of the beams. The results of these tests are shown in table I. In general, the properties are typical for 27ST and there is no great difference between the tensile and the compressive yield strengths of the flange material, the

average value for compression being less than 4 percent greater than that for tension.

DESCRIPTION OF TESTS

The I-sections were tested in pairs as beams in a 40,000-pound capacity Amsler testing machine as illustrated in figure 2. For all tests the horizontal distance between the supports and the point of application of load to the specimens was 12 inches and, consequently, for any load the bending moment in each beam (in in.-lb) was equal to three times the load. The ends of each pair of beams were laterally restrained by means of the end restraining frames shown in figure 3. Both top and bottom flanges of the beams were bolted to the plates. In order to obtain the maximum possible restraining action, the flanges of each beam were filed to a light tap fit in grooves in the steel plates. The laterally unsupported length of the beams ranged from 18 inches to 88 inches. Vertical deflections were measured by means of a mirrored scale attached to the web of each beam at the middle of the span, and a taut wire attached to pins on the neutral axis at the ends of the laterally unsupported length. Lateral deflections were measured in a similar manner except that the mirrored scales were attached to the top and the bottom flanges of the beams.

The stresses developed in the flanges of the beams were measured with Huggenberger tensiometers mounted as shown in figure 2. These instruments were removed before the beams were loaded to failure. In all cases loading was continued until a definite maximum value had been reached, as indicated by a falling off of the load despite continued movement of the head of the testing machine.

RESULTS AND DISCUSSION

Table II shows the maximum loads and critical stresses at failure. All the specimens tested failed by lateral buckling as illustrated by figure 4. Typical load-deflection curves for long- and short-span beams are shown in figures 5 and 6. In the case of the long-span beams, definite lateral deflection of the compression flanges occurred at relatively low loads and increased gradually until fail-

ure occurred. For the short-span specimens the lateral deflection of the compression flanges was relatively small even at loads only slightly lower than the maximum. Even for the shortest span length there was no marked deviation of the vertical deflection from a linear relationship with load.

Figure 7 shows a comparison between the measured and the computed stresses for the specimen having a laterally unsupported length of 33 inches. Because the stresses were measured on the edges of the flanges, the computed stresses are for locations 1/16 inch from the outer fibers. For this particular test the measured stresses were within 3 percent of the computed stresses. This agreement between the computed and the measured stresses indicates that the actual moments applied to the specimens were in very good agreement with the moments calculated from the applied loads.

Within the elastic range of the material the critical stress for a symmetrical aluminum-alloy I-beam subjected to pure bending in the plane of the web may be expressed as (see reference 3)

$$S_{cr} = \frac{19800000}{(KL)^2 Z} \sqrt{I_l \left[J(KL)^2 + 6.58\, I_l h^2\right]} \qquad (1)$$

where

S_{cr} critical stress, lb per sq in.

K factor denoting end restraint ($K = 1$ when ends are not restrained against lateral bending, and $K = 1/2$ when lateral restraint at ends is complete).

L laterally unsupported length of beam, in.

Z section modulus of beam about principal axis normal to web, in.^{3}.

I_l moment of inertia of beam about principal axis in web, in.^{4}.

J torsion factor, in.^{4}.

h depth of beam, in.

If the critical moment (M_{cr}) produces stresses beyond the elastic limit of the material, the lateral stiffness of the beam is no longer equal to the product of the elastic modulus (E) and the moment of inertia (I_l) but may be represented by the same expression provided that E is replaced by E_R, a reduced modulus value depending upon the magnitude of the stress. It has been shown that, for rectangular bars subjected to uniform compressive stresses above the elastic limit, the value of E_R can be expressed as (reference 2, p. 156)

$$E_R = \frac{4E\ E_T}{(\sqrt{E} + \sqrt{E_T})^2} \qquad (2)$$

where

E elastic modulus of material, lb per sq in.

and

E_T tangent modulus (slope of stress-strain curve) corresponding to the average compressive stress, lb per sq in.

If it is assumed that the flanges of an I-section loaded as a beam act as rectangular bars under uniform stress equal to the extreme-fiber stress, the foregoing expression for E_R should be applicable, without serious error, in the determination of the lateral flexural stiffness of an I-beam stressed above the elastic limit of the material. If it is further assumed that the ratio between the shear modulus and the bending modulus remains unchanged, an approximation of the critical stress for an I-beam subjected to pure bending may be obtained by multiplying the right-hand side of equation (1) by the ratio E_R/E where E_R corresponds to the value of the critical stress obtained and E is the elastic modulus of the material. The right-hand side of equation (1) may arbitrarily be called the stability factor (B). The critical stress for buckling beyond the elastic range may then be expressed

$$S_{cr} = \frac{E_R}{E} B \qquad (3)$$

Figure 8 shows a compressive stress-strain curve for the 27ST material tested and the reduced modulus curve derived from the stress-strain curve. The stress-strain

curve shown is the average curve obtained from pack compression tests of specimens cut from the flanges of several beams. Figure 8 also shows the ratio of the reduced modulus (E_R) to the elastic modulus (E), plotted against the stress.

Figure 9 shows a tensile stress-strain curve and the corresponding reduced modulus and ratio of reduced modulus to elastic modulus curves for the 27ST material. As for the compression tests, the tensile stress-strain curve shown in figure 9 is an average curve. A comparison of figure 8 with figure 9 reveals that, except for stresses above 52,000 pounds per square inch, there was no significant difference between the tensile and the compressive stress-strain characteristics of the material. For the sake of simplicity, however, all computations in which the value of E_R is involved have been based on the values obtained from the compressive data (fig. 8).

In cases of buckling at stresses beyond the elastic range, the approximate critical stress may be determined by means of the equivalent slenderness ratio method. (See reference 6.) In this method the stability factor (B) of an I-beam is expressed in terms of an equivalent slenderness ratio and the critical stresses are then taken from a column curve constructed from the compressive stress-strain curve for the material. The critical stress for an aluminum-alloy column, where the stress does not exceed the elastic limit, may be expressed as

$$S_{cr} = \frac{101660000}{(KL)^2} r^2 \tag{4}$$

where r is the equivalent radius of gyration. Equating equations (1) and (4) and solving for the equivalent radius of gyration gives

$$r = \sqrt{\frac{0.195}{Z} \sqrt{I_l \left[J(KL)^2 + 6.58\, I_l\, h^2\right]}} \tag{5}$$

This equivalent radius of gyration, used with the equivalent length (KL), gives the equivalent slenderness ratio (KL/r).

Figure 10 shows the column curve constructed from the compressive stress-strain curve given in figure 8. In figure 10 the intercept was obtained from the expression (reference 7)

$$e = Y.S. \left(1 + \frac{Y.S.}{200000}\right) \qquad (6)$$

where

e intercept.

and

Y.S. yield strength of material (offset, 0.2 percent).

The straight-line portion of the curve was drawn from this intercept tangent to the Euler curve.

In figure 11 calculated values of critical stress corresponding to various unsupported lengths of the section tested have been plotted. These values were obtained by solving equation (1) after the substitution of appropriate values of unsupported beam length and a value of $K = 1/2$. The curve represents elastic action. For stresses greater than 42,000 pounds per square inch the curve has no significance as figure 8 shows plastic action occurs when the stresses exceed this value. In figure 11 the experimentally determined values of critical buckling stress have also been plotted against their corresponding unsupported lengths. Throughout this report it should be borne in mind that the expression, critical stress (S_{cr}), signifies the critical bending moment divided by the section modulus of the section. Within the elastic limit of the material the critical stress is obviously equal to the actual extreme-fiber stress but, for stresses beyond the elastic limit of the material, the critical stress obtained by dividing the critical moment by the section modulus would be slightly higher than the actual extreme-fiber stress. From an inspection of figure 11, it may be seen that all the experimentally determined values of critical stress fall below the theoretical curve. Evidently, the theoretical curve could be brought into good agreement with the experimentally determined values of critical stress by the use of K values slightly greater than 1/2 in equations (1) and (3). In other words, in figure 11 the deviation of the experimentally determined values of critical stress from the theoretical values indicates that the ends of the beams were not completely restrained against lateral bending.

In order to determine the degree of end fixity of the

beams tested, the experimentally determined values of critical stress (which did not exceed the elastic limit of the material) and the corresponding values of unsupported length were substituted in equation (1) and the equation was solved for K. The curve of K values shown in figure 12 has been extrapolated so as to indicate the probable value of K for those specimens whose critical stress was beyond the elastic limit of the material. Based on the values of end-fixity factor K shown in figure 12, the degree of end fixity was about 4 percent less than complete for the longest laterally unsupported length and about 19 percent less than complete for the shortest laterally unsupported length.

Figure 13 shows the relation between the experimentally determined values of critical stress, for those tests in which buckling occurred in the plastic range, and corresponding calculated values. According to figure 12, the degree of end fixity varied with the unsupported length of the beam. In figure 13, critical stress has been plotted against stability factor (B) since this factor contains both variables K and L. Two curves are shown representing calculated values of critical stress; one is obtained by multiplying the stability factor by the modulus ratio (E_R/E), the other is determined by the equivalent slenderness ratio method, using the column curve shown in figure 10. When the points representing the test results were plotted, the stability factor (B) corresponding to a given test was determined on the basis of the unsupported length of the beams (L), and the corresponding K value was taken from figure 12. Obviously the agreement between the experimental results and the calculated curves is meaningless for critical stresses within the elastic range, since the K values used in evaluating the stability factor were determined from the test results. For the short beams, however, which buckled at stresses in the plastic range, the K values were determined independently of the corresponding test results. Figure 13 indicates that the stresses computed from experimentally determined values of critical bending moment agreed very closely with those calculated according to equation (3). The experimentally determined values are higher than those indicated by the use of the equivalent slenderness ratio method. For critical stresses in the vicinity of the yield strength, this difference is about 20 percent.

Figures 14, 15, and 16 are typical plots of the relation between the loads and the lateral deflections plotted according to the Southwell method. (See reference 8.) The method consists in plotting the applied load against the ratio of load to corresponding lateral deflection. If loads are used which are within the elastic range, the plot thus obtained should be a straight line intercepting the load axis at a value equal to the critical load. This method of plotting such data was suggested by Southwell in 1932 (reference 8) for the case of round end columns. It has been pointed out by Donnell (reference 9, pp. 27-38) that this method is also applicable to other types of stability problems. The results of the Southwell plots of the data obtained in this investigation demonstrate the applicability of the method to the case of the lateral buckling of beams. In table III it can be seen that the values for critical load determined from the Southwell plots agree very well with the experimentally determined values. In figures 14 and 15 the plotted points correspond to loads within the elastic range and, consequently, the intercept on the vertical axis indicates the value of the critical load, assuming elastic buckling. In the case of the 28-inch unsupported length (fig. 15), however, the load at which buckling occurred produced stresses slightly above the elastic range, which accounts for the difference between the critical load values shown for this span length in table III. It may be noted in table III that the critical load values determined from the Southwell plot for the shortest span lengths (18 in. and 23 in.), agree very well with the test results. The plotted points from which the critical load values were obtained for these two cases were for loads beyond the elastic range. In such a Southwell plot the critical load corresponds to the highest point on the curve. (See reference 9, p. 36.) There is no theoretical reason why in such a plot the points for loads beyond the elastic range should fall on a straight line. In figure 16, however, a straight line appears to be a good approximation for the curve in this region. The scatter among the points corresponding to low loads in figures 14, 15, and 16 results largely from the inaccuracies in the measurements of the small lateral deflections occurring at these low loads.

Referring to table III, it will be noted that there was considerable difference in the value of the critical load determined from a Southwell plot for an unsupported span length of 38 inches, depending on whether the average lateral deflections or the lateral deflections for the

south beam were used. For some reason, such as initial crookedness or unequal distribution of load, the south beam buckled first. In such a case the other beam would fail immediately.

CONCLUSIONS

From this study of the lateral stability of equal-flanged I-beams subjected to pure bending, the following conclusions have been drawn:

1. Despite the precautions taken, complete lateral restraint of the ends of the beams was not achieved. For the longest specimen tested, the degree of end fixity was about 4 percent less than complete, whereas for the shortest specimen tested, the degree of end fixity was about 19 percent less than complete.

2. The critical stress at which equal-flanged aluminum I-beams subjected to pure bending become unstable may be determined from the equation

$$S_{cr} = \frac{E_R}{E} \frac{19800000}{(KL)^2 Z} \sqrt{I_l \left[J(KL)^2 + 6.58\, I_l h^2\right]}$$

In both the elastic and the plastic ranges of the material the values of critical stress calculated by means of the foregoing equation were in good agreement with the values computed from experimentally determined critical bending moments.

3. Approximate values of critical stress, as determined by the equivalent slenderness ratio method, were about 20 percent lower than the values obtained experimentally, when buckling occurred at stresses near the yield strength of the material.

4. Values of critical load determined by Southwell plots of the load-deflection data were in good agreement with the experimentally determined values of critical load. This agreement demonstrates the applicability of the method to the case of lateral buckling of beams.

Aluminum Company of America,
Aluminum Research Laboratories,
New Kensington, Pa., March 26, 1940.

REFERENCES

1. Timoshenko, S.: Annales des Ponts et Chaussees, 1913.

2. Timoshenko, S.: Theory of Elastic Stability. McGraw-Hill Book Co., Inc., 1936.

3. Hill, H. N.: A Consideration of the Lateral Instability of I-Beams. P.T. Rep. No. 37-25, Aluminum Res. Lab., Aluminum Co. of Am., 1937.

4. Dumont, C., and Hill, H. N.: The Lateral Instability of I-Beams having Flanges of Unequal Widths. P.T. Rep. No. 37-51, Aluminum Res. Lab., Aluminum Co. of Am., 1937.

5. Aitchison, C. S., and Tuckerman, L. B.: The "Pack" Method for Compressive Tests of Thin Specimens of Materials Used in Thin-Wall Structures. T. R. No. 649, NACA 1939.

6. Anon.: Structural Aluminum Handbook. Aluminum Co. of Am., 1938, p. 48.

7. Templin, R. L., Sturm, R. G., Hartmann, E. C., and Holt, M.: Column Strength of Various Aluminum Alloys. Tech. Paper No. 1, Aluminum Res. Lab., Aluminum Co. of Am., 1938.

8. Southwell, R. V.: On the Analysis of Experimental Observations in Problems of Elastic Stability. Proc. Roy. Soc. (London), ser. A, vol. 135, April 1932, pp. 601-616.

9. Donnell, L. H.: On the Application of Southwell's Method for the Analysis of Buckling Tests. Contributions to the Mechanics of Solids dedicated to Stephen Timoshenko by his friends on the occasion of his sixtieth birthday anniversary. The Macmillan Co., 1938, pp. 27-38.

TABLE I

MECHANICAL PROPERTIES OF 27ST EXTRUDED I-BEAM SECTION NO. K11867

(P.T. No. 040838-C)

Beam marked	Tensile strength (lb/sq in.)		Tensile yield strength (Offset = 0.2 percent) (lb/sq in.)		Compressive yield strength (Offset = 0.2 percent) (lb/sq in.)
	Flange	Web	Flange	Web	Flange
A	62,690	60,790	54,400	52,700	56,500
B	62,420	61,170	53,600	51,900	55,400
C	63,330	62,010	54,800	53,400	56,800
D	62,640	61,180	54,500	52,800	55,000
E	62,850	61,030	54,500	52,500	56,900
F	60,320	58,360	51,400	49,100	52,700
G	63,280	61,980	54,500	53,100	56,600
H	63,660	62,720	54,800	54,300	57,100
I	63,220	62,500	54,800	53,800	56,500
J	64,090	62,140	54,400	53,200	57,000
K	62,870	61,430	54,200	52,800	56,400
L	61,640	61,390	53,100	53,200	56,900
M	62,550	60,810	54,200	52,300	56,000
Average	62,735	61,350	54,100	52,700	56,150

TABLE II

SUMMARY OF TEST RESULTS

Test No.	Span length (in.)	Laterally unsupported length, L (in.)	Maximum applied load (lb)	Maximum applied moment[a] (in.-lb)	Critical stress[b] (lb/sq in.)
1	114	88	1,800	5,400	7,800
2	104	78	2,185	6,555	9,420
3	94	68	2,733	8,199	11,780
4	84	58	3,455	10,365	14,890
5	74	48	4,585	13,755	19,760
6	64	38	7,000	21,000	30,170
7	59	33	8,590	25,770	37,020
8	54	28	10,280	30,840	44,300
9	49	23	11,900	35,700	51,330
10	44	18	12,840	38,520	55,300

[a]The applied moment is three times the applied load.

[b]The critical stress, S_{cr}, is the critical moment, M_{cr}, divided by the section modulus, Z.

TABLE III

COMPARISON OF ACTUAL CRITICAL LOAD AND VALUES OF CRITICAL LOAD DETERMINED FROM SOUTHWELL PLOT OF LOAD-DEFLECTION DATA

Laterally unsupported length (in.)	Critical load from Southwell plot (lb)	Actual critical load (lb)
88	1,800	1,810
78	2,180	2,185
68	2,800	2,733
58	3,580	3,455
48	4,750	4,585
38	7,750 (7,200)[a]	7,000
33	8,800	8,590
28	11,800[b]	10,280
23	11,600[c]	11,900
18	12,600[c]	12,840

[a]The value of 7200 pounds was determined from load-deflection data for only south beam. All other values are based on the average data for north and south beams.

[b]Value based on lateral deflections within the elastic range.

[c]Value based on lateral deflections beyond the elastic range.

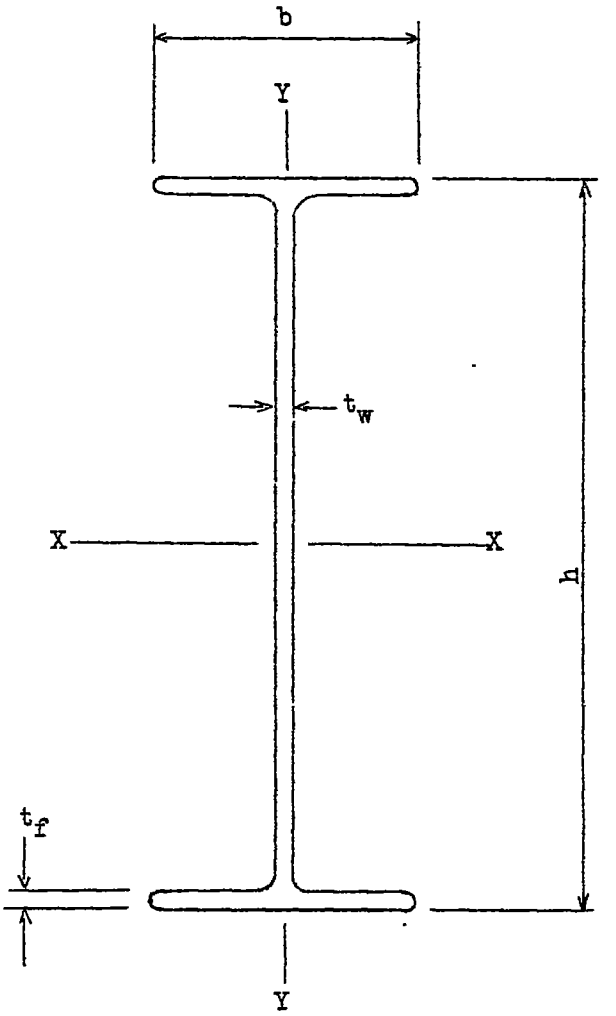

	Dimensions, in.	
	Nominal	Average measured
b	1-3/8	1.385
h	4	3.998
t_w	5/64	.0806
t_f	3/32	.0969

Section elements based on average dimensions

Moment of inertia of flanges, I_1, about axis Y-Y = .04295 in.^{4}
" " " " , I, about axis X-X = 1.3916 in.^{4}
Section modulus, Z, about axis X-X = .6962 in.^{3}
Torsion factor, J = .0015382 in.^{4}

Figure 1.- Nominal and actual dimensions and section elements of extruded I-section.

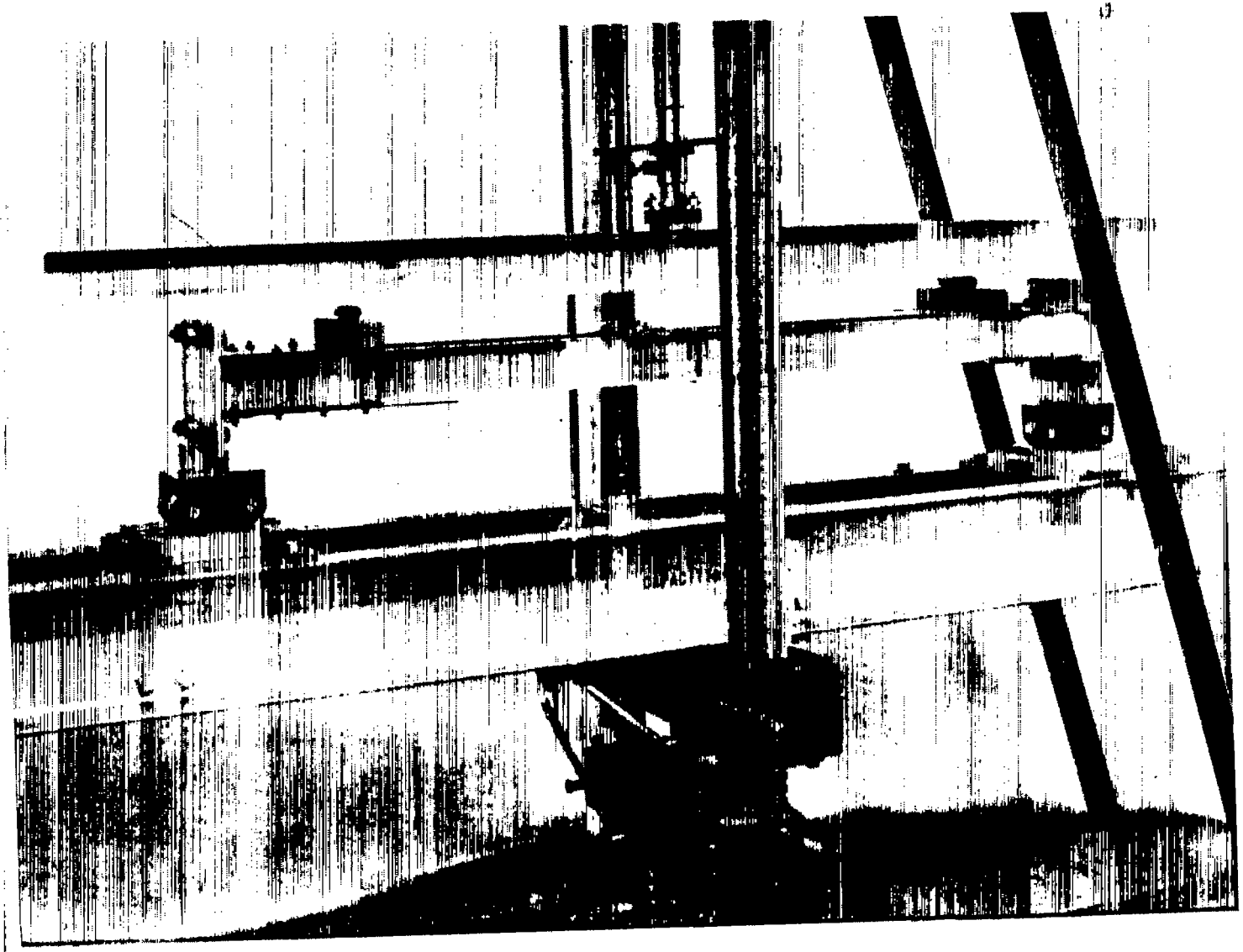

Method of Supporting and Loading Beams in 40 000-Pound Capacity Amsler Testing Machine
Figure 2.

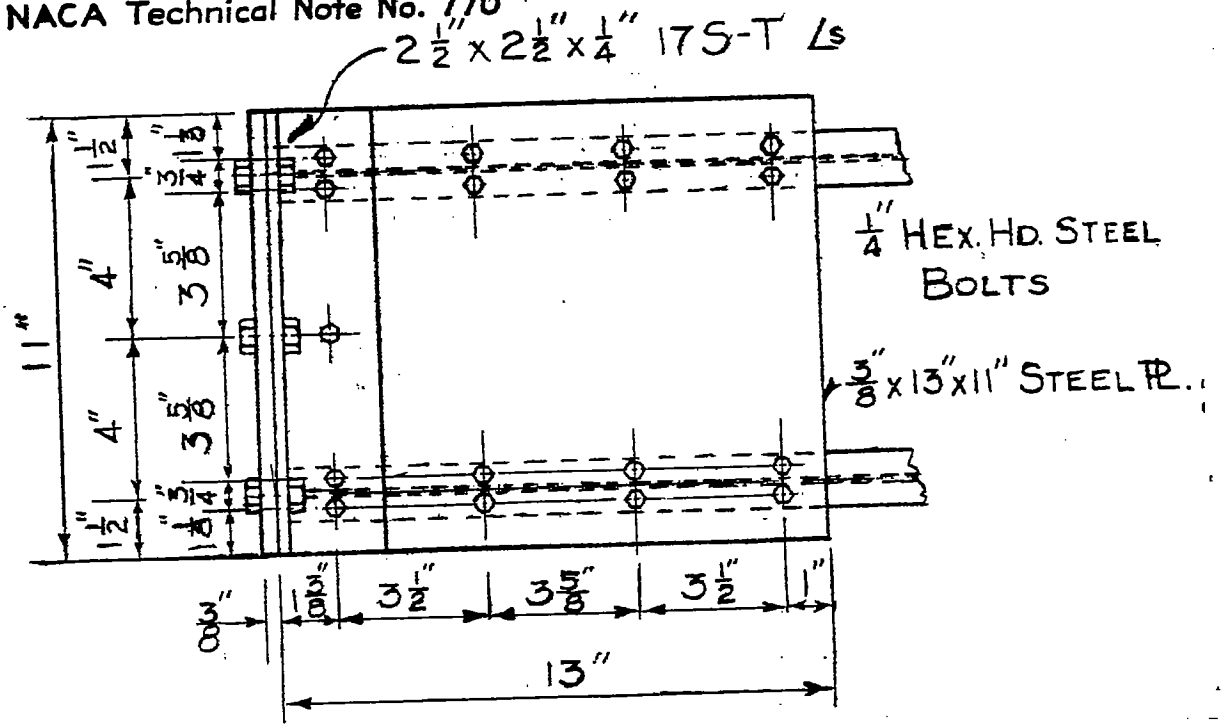

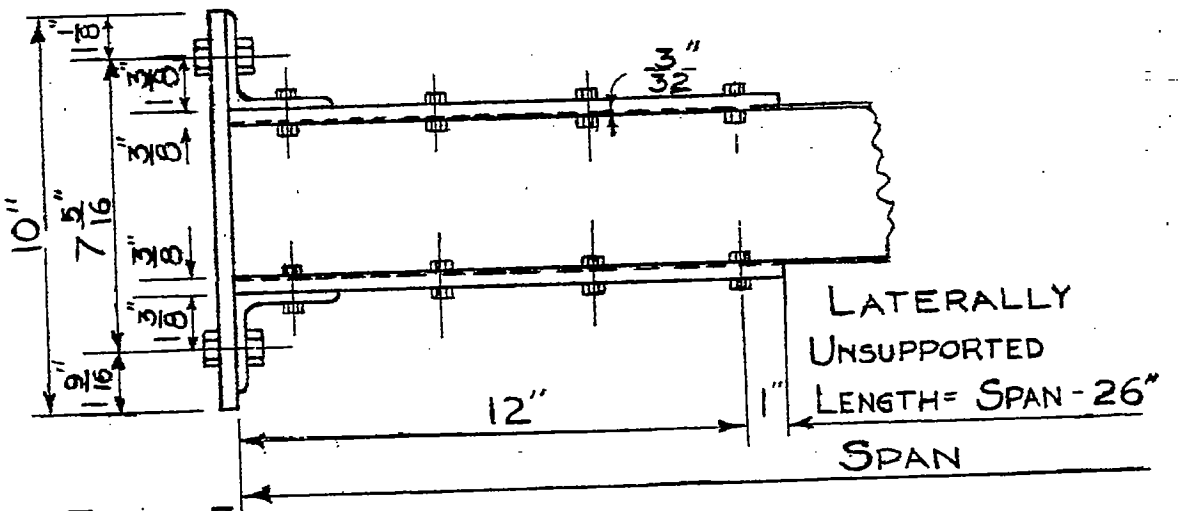

FIGURE 3
DETAILS OF END RESTRAINING FRAMES

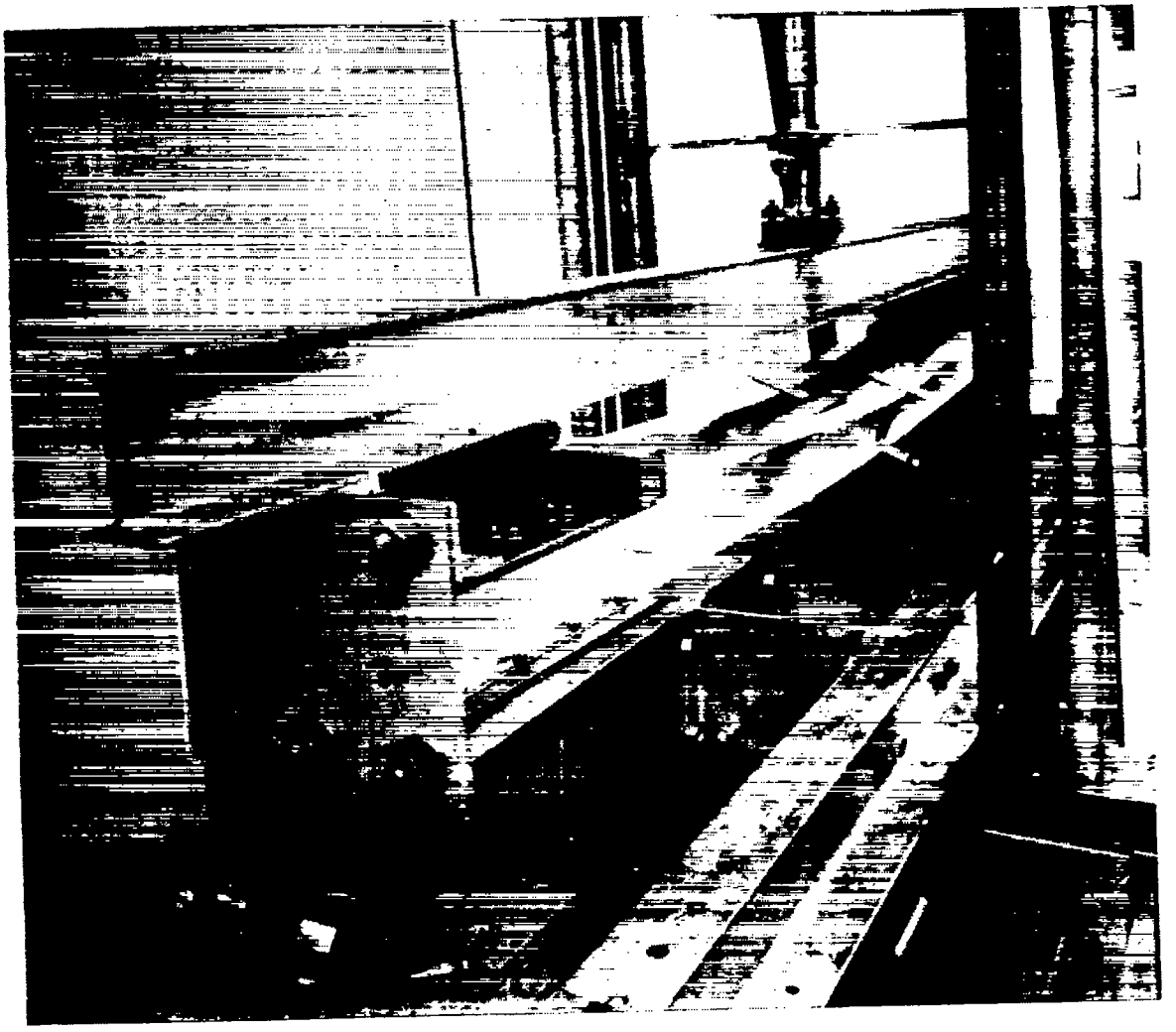

Lateral Buckling of I beams under Pure Bending

Figure 4

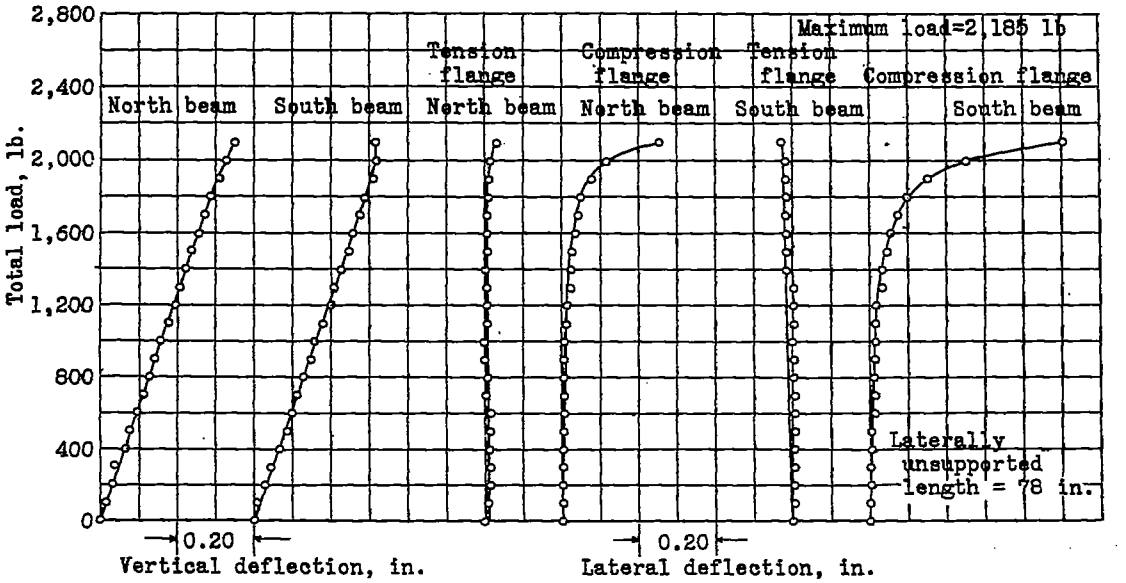

Figure 5.- Vertical and lateral deflection curves for beam test of I-beam K-11867.

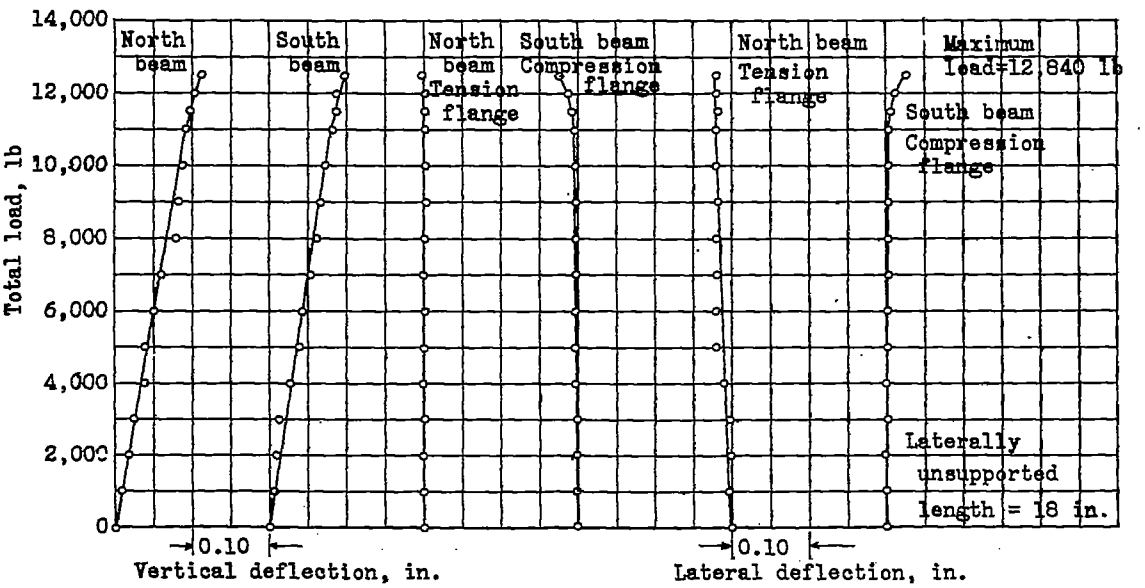

Figure 6.- Vertical and lateral deflection curves for beam test of I-beam K-11867.

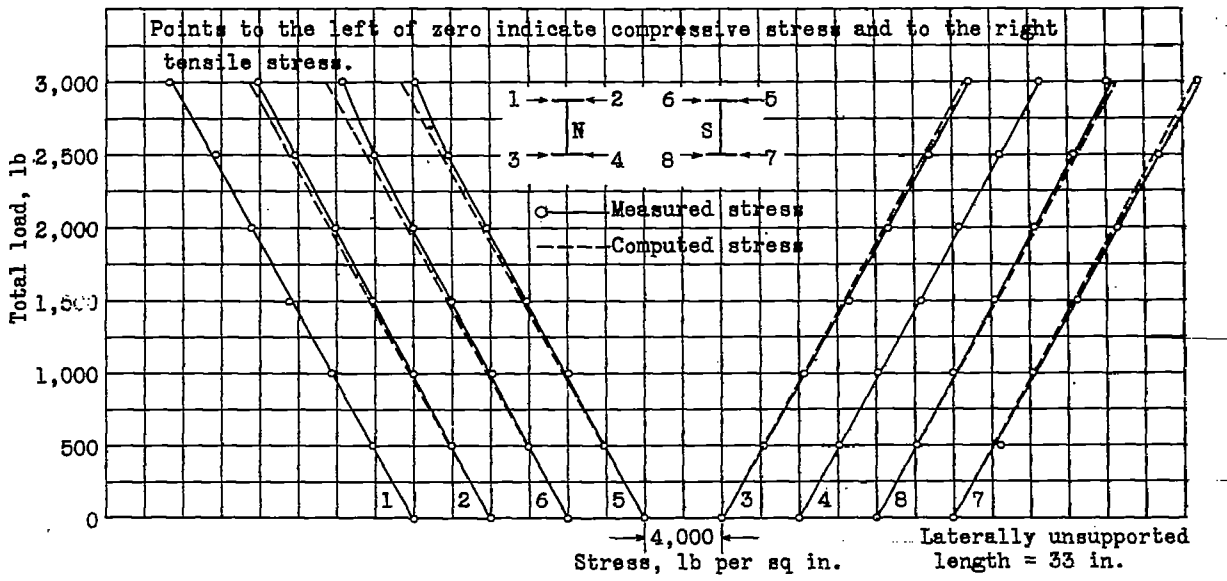

Figure 7.- Comparison of measured and computed stresses for beam test of I-beam section K-11867.

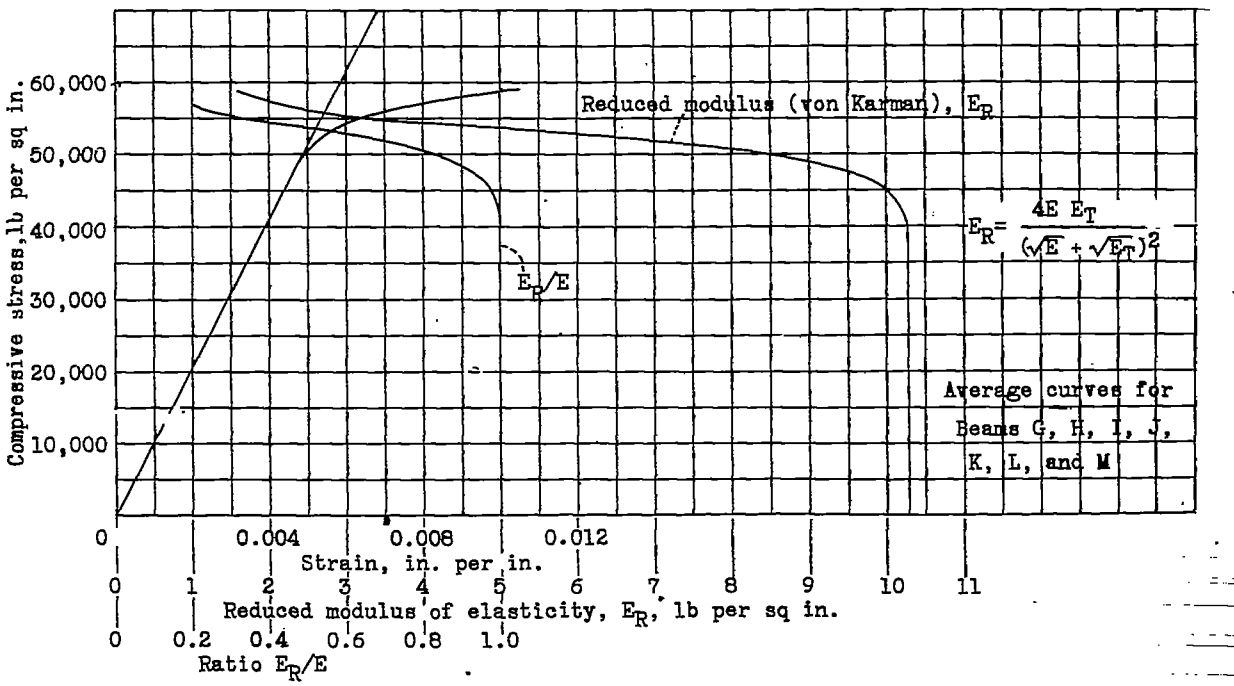

Figure 8.- Compressive stress-strain and stress-modulus curves for 27S-T I-beam section K-11867.

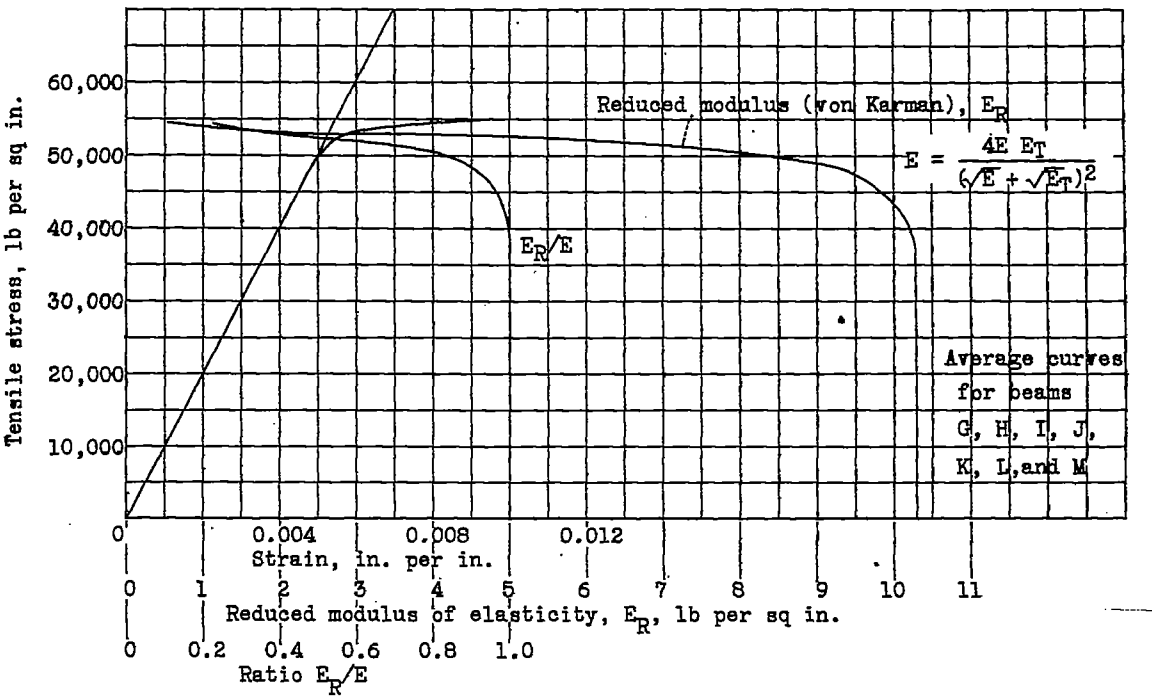

Figure 9.- Tensile stress-strain and stress-modulus curves for 27S-T I-beam section K-11867.

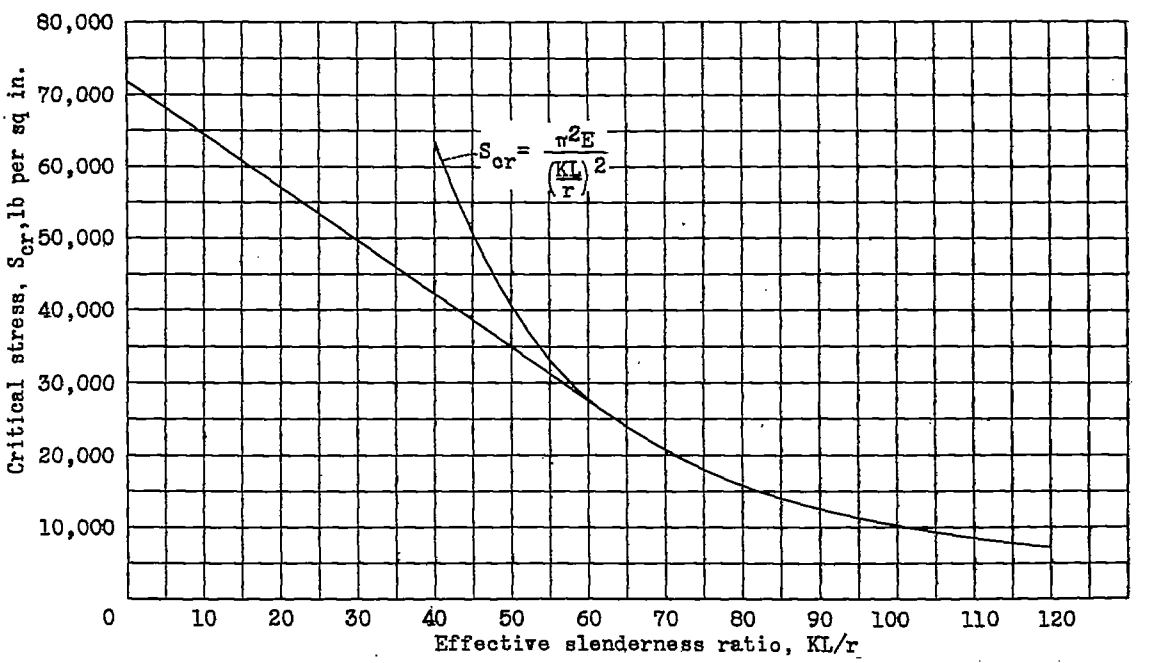

Figure 10.- Column strength of 27S-T aluminum alloy I-Section K-11867.

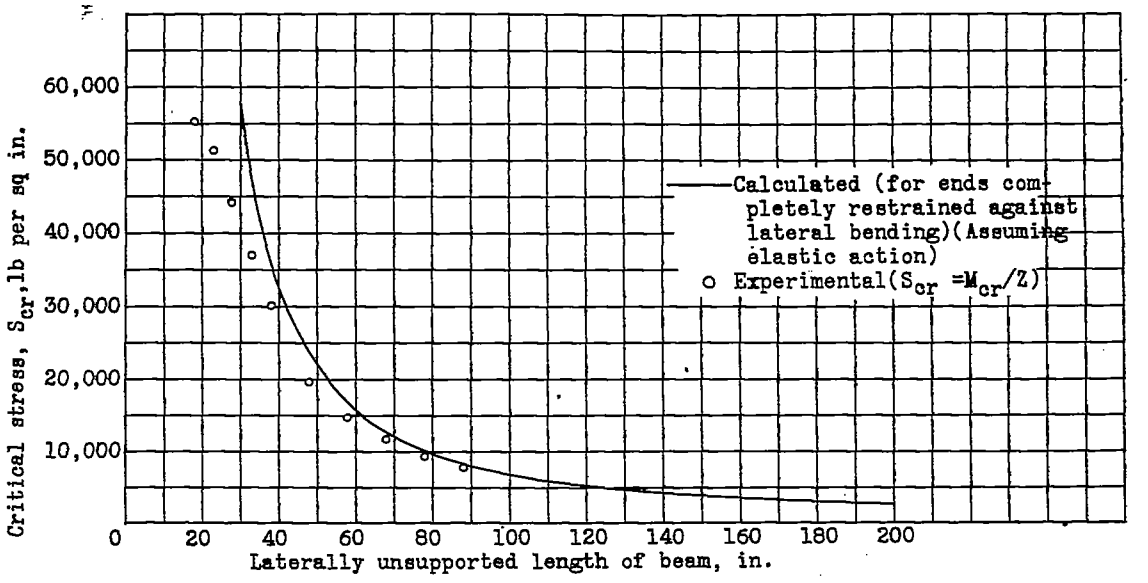

Figure 11.- Critical stress-unsupported length curve for beam test of I-beam section K-11867.

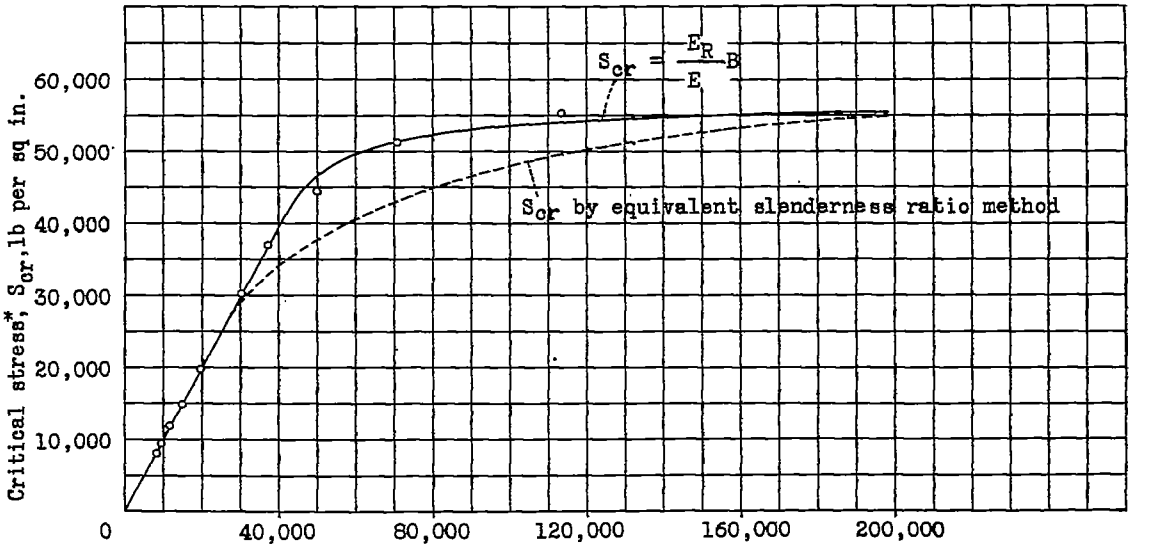

Stability factor, $B = \frac{19,800,000}{(KL)^2} \sqrt{I_1 \left[J (KL)^2 + 6.58 I_1 h^2\right]}$

$* \; S_{cr} = \frac{M_{cr}}{Z}$

Figure 13.- Critical stress for 27S-T I-beams under pure bending.

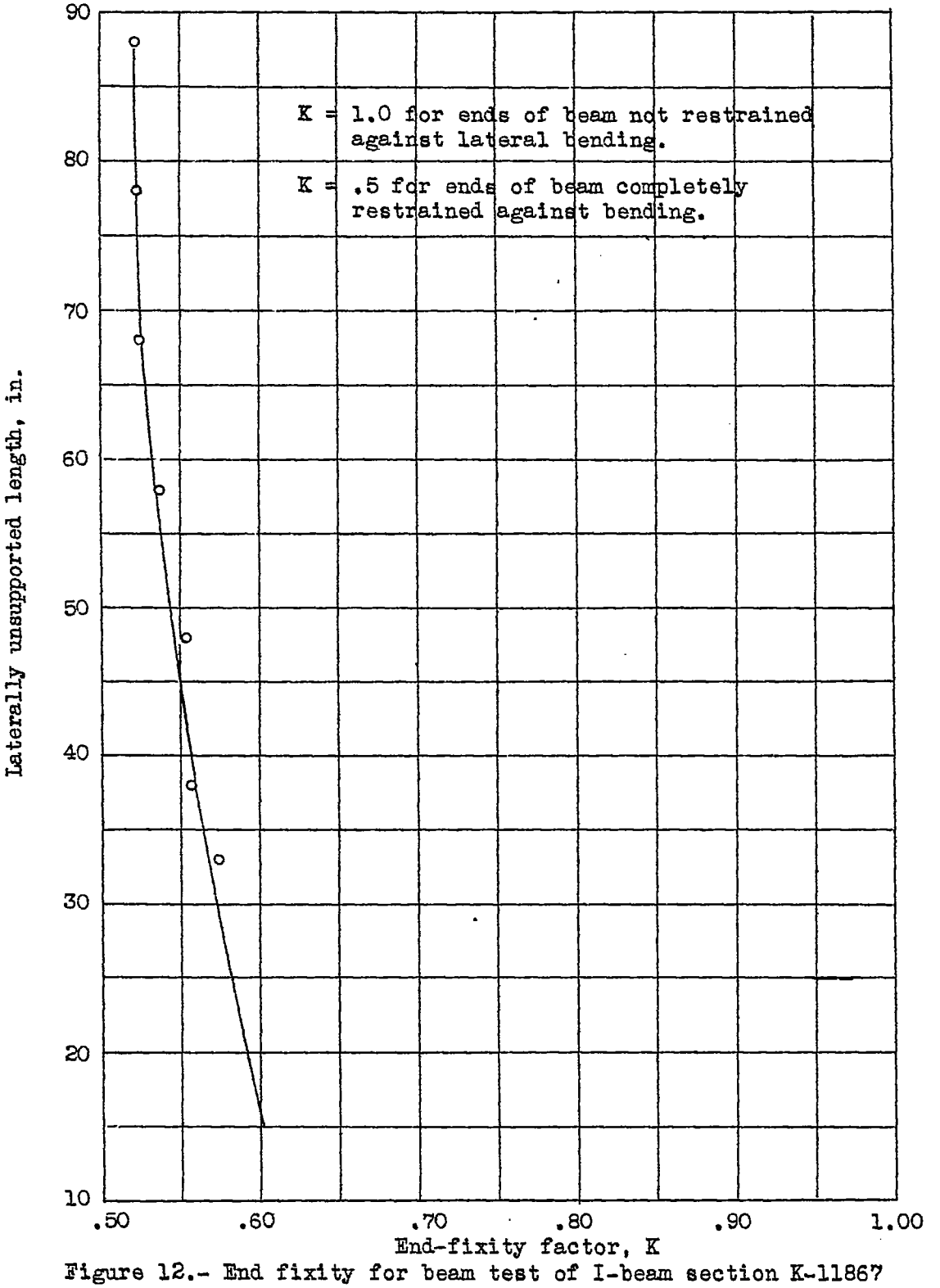

Figure 12.- End fixity for beam test of I-beam section K-11867

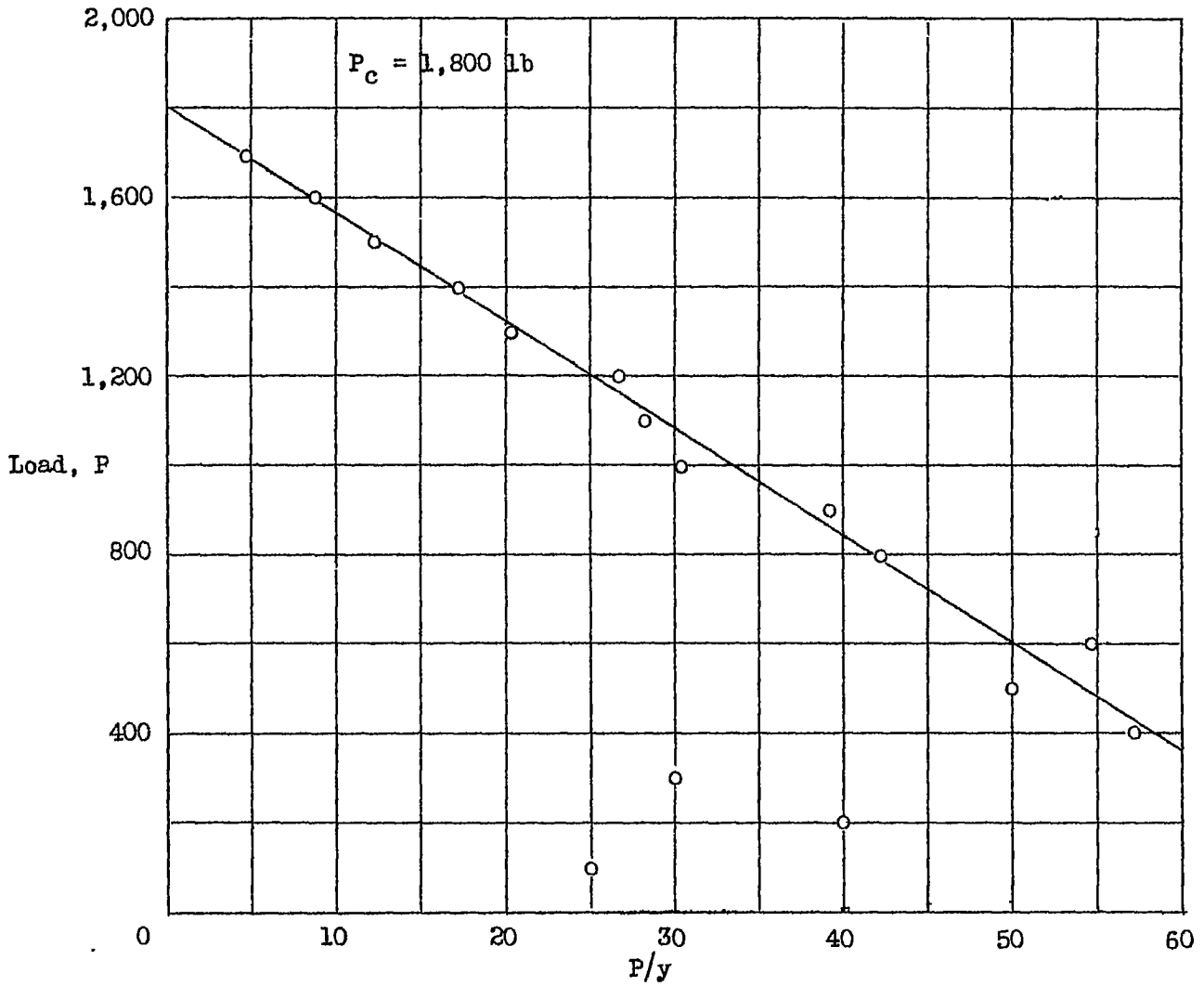

y = Average lateral deflection of compression flanges x 500.

Figure 14.- Determination of critical load by Southwell method. Unsupported length = 88 inches.

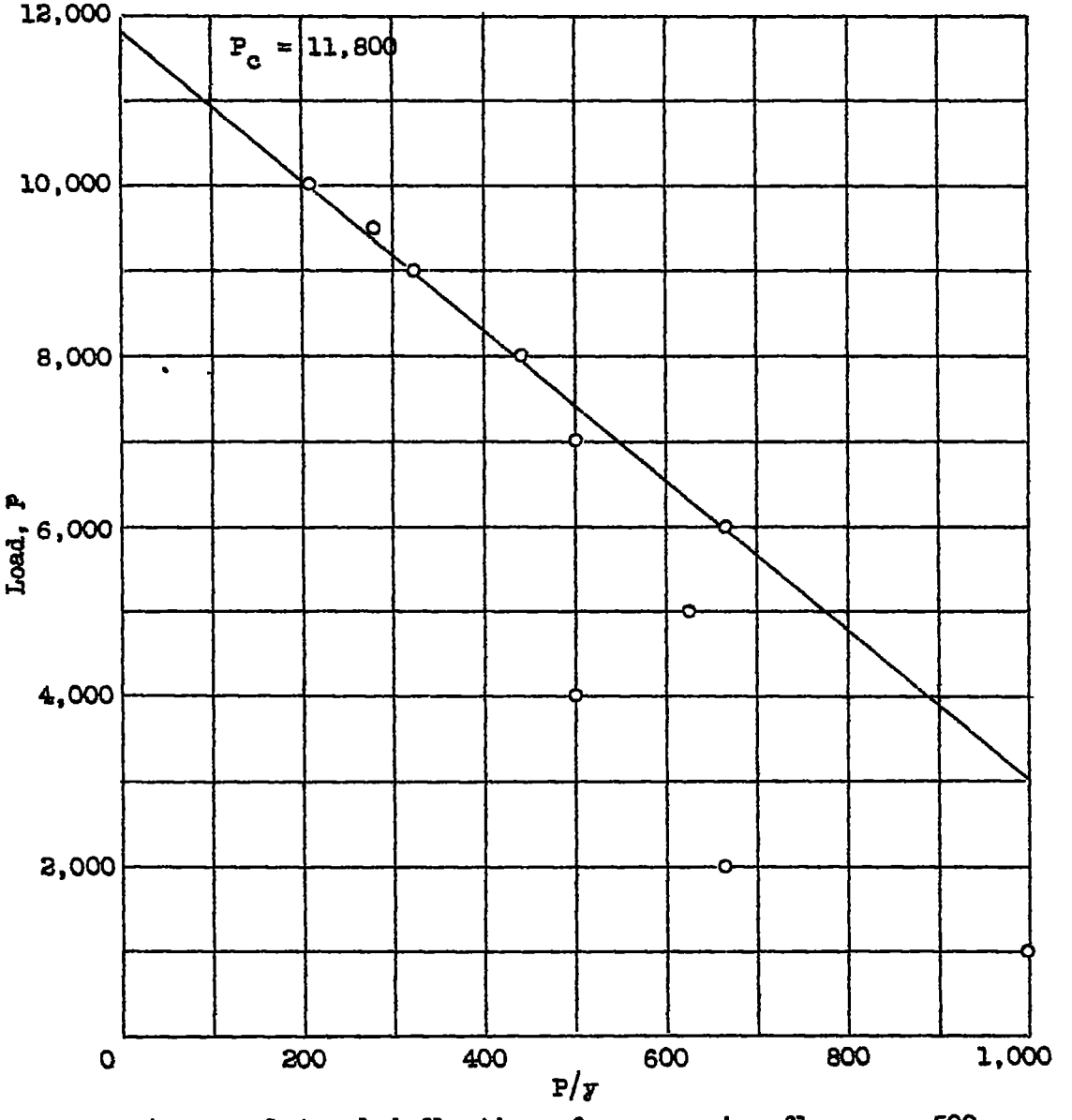

y = Average lateral deflection of compression flanges x 500

Figure 15.- Determination of critical load by Southwell method. Unsupported length = 28 inches.

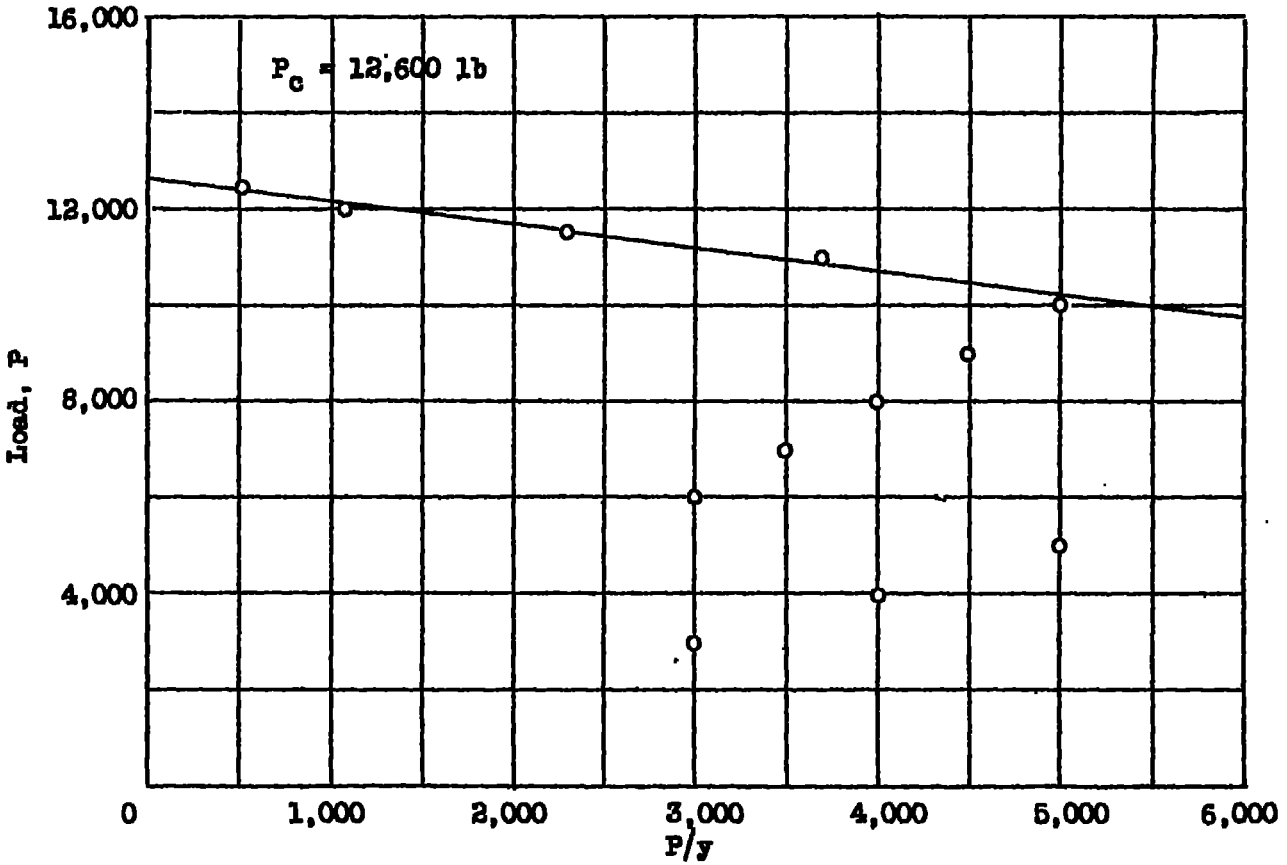

y = Average lateral deflection of compression flanges x 500

Figure 16.- Determination of critical load by Southwell method. Unsupported length = 18 inches.