DECLASSIFICATION CANCELLED

TECHNICAL NOTES

NATIONAL ADVISORY COMMITTEE FOR AERONAUTICS

No. 778

NOTES ON THE STALLING OF VERTICAL TAIL SURFACES AND ON FIN DESIGN

By F. L. Thompson and R. R. Gilruth
Langley Memorial Aeronautical Laboratory

LIBRARY COPY
AUG 21 1992
LANGLEY RESEARCH CENTER
LIBRARY NASA
HAMPTON, VIRGINIA

FOR REFERENCE

Washington
October 1940

NATIONAL ADVISORY COMMITTEE FOR AERONAUTICS

TECHNICAL NOTE NO. 778

NOTES ON THE STALLING OF VERTICAL TAIL SURFACES AND ON FIN DESIGN

By F. L. Thompson and R. R. Gilruth

SUMMARY

A discussion is given of the important aspects of the stalling of vertical tail surfaces. The type of instability encountered is described and the possibilities of inadvertent occurrence are noted. The influence of directional stability on the behavior of an airplane when the tail stall takes place is discussed. In this connection, flight tests of a twin-engine airplane in which the vertical fin area was increased are cited. The reasons for inadequate directional stability in certain modern designs are accounted for and the properties and application of dorsal fins are discussed. In addition, the chief factors regulating the requirements for conventional fin area are given, in which connection a simplified criterion for directional stability is presented.

It may be concluded that the stalling of vertical tail surfaces is not in itself a dangerous condition. Provided sufficient directional stability exists at large angles of sideslip, the tail stall may occur with modern airplanes, as with those of the past, without the knowledge of or concern to the pilot.

INTRODUCTION

A deficiency in vertical fin area has been a relatively common occurrence in airplanes during the past few years, and in many cases it has been necessary to increase the vertical tail area of the original design after preliminary flight tests. The difficulties experienced have been manifested in various ways. In some cases it has been an annoying directional oscillation, a conventional form of directional instability. Another source of annoyance has been the development of large negative pitching

moments in sideslip. This condition has been particularly objectionable when experienced on airplanes of low longitudinal stability, since it requires that the elevator movement must be carefully coordinated with the rudder movement to prevent diving upon entry into a sideslip and stalling on recovery from a sideslip. Another difficulty experienced is that in some cases the unstable moments have exceeded the maximum capacity of the fin, so that when sideslips have been produced intentionally or inadvertently due to moments produced by the rudder, asymmetric power or gusts, stalling of the vertical fin has been produced and a reversal of rudder force experienced. This latter condition is the one given chief consideration in the present paper. The chief basis for this discussion is data accumulated in the flight research laboratory of the National Advisory Committee for Aeronautics, in an extensive flight investigation of the flying qualities of various airplanes. This investigation has included tests of airplanes of varied size from small, light, two-place airplanes to the largest multiengine bombers.

INSTABILITY ASSOCIATED WITH THE STALLING OF VERTICAL TAIL SURFACES

Under certain conditions, airplanes become unstable directionally at large angles of yaw as a result of the stalling of the vertical tail surfaces. This directional instability is manifested in the form of a reversal of the rudder hinge moment, as a result of which the pilot must force the rudder back to neutral to return to unyawed flight. This condition is of more concern for the large airplanes than for the small ones because the rudder forces are so large in comparison with the pilot's strength. Airplanes otherwise possessing sufficient directional stability, may suffer this reversal of rudder force when tail stall occurs.

In cases where the reversal of hinge moment is of a magnitude which exceeds the pilot's strength, an equilibrium of yawing moments occurs at a large angle of yaw, as a result of which the airplane experiences a rapid rotation in yaw accompanied by a rolling motion, depending upon the dihedral effect. Comparable conditions may be simulated in a normal airplane by holding the rudder over manually.

In the relatively small airplanes, recovery from this condition is possible by returning the rudder against the sideslip. In large airplanes, as mentioned above, the rudder may be too heavy to return, and the proper use of asymmetric throttle may be the only recovery means available to the pilot. It is important to note in this connection that the inherent pilot reaction, namely, getting the nose down, is undesirable following the rudder reversal, because the aerodynamic forces which hold the rudder over will be increased by the increase in speed. It is also true, however, owing to the change in pitching moment which usually accompanies large sideslip angles, that confusion may occur as to what the angle of attack actually is. There is, therefore, danger that the rotation in yaw may degenerate into that of a true spin.

In cases where the sideslip is deliberate and gradually entered as, for example, during tests, the imminence of the tail stall has been indicated by a definite lightening of the rudder force. This warning is of little value, however, where large sideslip angles are reached as a result of atmospheric disturbances or following sudden engine failure in a multiengine airplane.

RELATION BETWEEN ANGLE OF BANK AND ANGLE OF SIDESLIP

The relation existing between angle of bank and angle of sideslip in airplanes of modern type, throws an interesting light on the possibility of attaining this type of directional instability inadvertently. It will be appreciated that with the instrument equipment ordinarily installed in the airplane the sideslip angle remains an unknown quantity, whereas the angle of bank can be readily determined. Thus it is usual to resort to the angle of bank while sideslipping as an index of the angle of sideslip. The characteristic that actually determines what the angle of bank can be for a given sideslip, is the amount of cross-wind force that the airplane can develop at that angle of sideslip. This cross-wind force is made up chiefly of the lateral component of propeller thrust and the side force on the fuselage, and these quantities are so variable that the angle of bank is totally unreliable as an index of the angle of sideslip. During a por-

tion of the previously mentioned investigation of flying qualities of various airplanes, therefore, the NACA has made use of a sideslip indicator or recorder. The instrument consists simply of a vane free to pivot about a vertical axis and aline itself with the relative wind. The angle of the vane is either recorded or observed by someone within the airplane. By this means, the angle of sideslip and corresponding angles of bank have been determined for a number of airplanes.

An interesting feature of the results is that the sideslip angles in many cases were surprisingly large, particularly in view of the relatively small angles of bank experienced. The relation between angle of bank and angle of sideslip for a typical case for the power-on condition is shown in figure 1. It will be noted that the angle of bank for a given amount of sideslip varies with the air speed, and that at low speed an angle of bank of only 4° corresponds to a sideslip angle of 16°. That this angle of bank, which is the pilot's index of the magnitude of the sideslip, may be very small is noteworthy in connection with the possibility of attaining excessive sideslip inadvertently. The modern tendency seems to be toward characteristics that permit the airplanes to sideslip with so little bank that adequate directional stability at large angles of sideslip has become increasingly important.

In the above case, when the sideslip angle of 16° was reached, the vertical tail stalled, the rudder force reversed, and strong rotational tendencies developed. This condition occurred with about one-third full rudder deflection and, as previously noted, the corresponding angle of bank at low speed was not more than 4°. Characteristics of this general nature were experienced with several airplanes, but there were also several cases in which equilibrium was established at sideslip angles ranging from 30° to 50° without the development of unstable tendencies. These facts indicate that some factor in addition to the stalling of the vertical tail surfaces must regulate the behavior of airplanes at large angles of sideslip. They also indicate that the wind tunnels must provide means for testing models at much larger angles of yaw than has been customary in the past.

DEPENDENCE OF BEHAVIOR ON DIRECTIONAL STABILITY CHARACTERISTICS

Flight tests of various airplanes have shown that the tail stall is not in itself a source of danger because, in some cases, angles of yaw as great as 50° have been recorded in sideslips without the development of any unstable tendencies. Yet, in other cases, directional instability is developed at comparatively low angles of yaw. In this connection, detailed tests of a particular twin-engine airplane were very illuminating. On this airplane it was found that a vertical tail stall could be produced in all conditions of flight, but that the behavior of the airplane after the stall occurred was dependent on the rudder angle required to obtain the stall. With flap up, power on, for example, a rudder angle of only 9° produced 16° yaw. The resulting tail stall was accompanied by a reversal of rudder hinge moment. With flap down, power off, however, 20° of rudder was required to obtain the tail stall at an angle of yaw of 16° as before. In this case, as indicated by tufts placed on the vertical tail surfaces, the stall was as complete as in the other condition but the reversal of hinge moment did not take place and, insofar as the behavior of the airplane was concerned, the pilot was unaware that the tail surfaces had stalled. It was apparent from these observations that the rudder floating angle increased considerably when the fins stalled. In the power-on, flap-up condition, this floating angle exceeded that required for equilibrium in yaw, as a result of which the reversal of hinge moment occurred. In the flap-down, power-off condition, the rudder trim angles were always well beyond the rudder floating angles regardless of the flow condition.

In order to improve the characteristics of this airplane, the fixed vertical tail area was increased by about 80 percent. The airplane was originally equipped with twin vertical tails and the increase in area of the fixed surfaces was accomplished by adding a third fin without rudder at the fuselage center line. Flight tests with the additional fin area showed that the directional stability had been increased about 140 percent in the flap-up, power-on condition. Approximately 23° rudder deflection was required to reach 16° of yaw, as compared with the original condition which required but 9° of rudder. When the tail stall occurred, the increase in floating angle of the rud-

der was again indicated but this time by a slight decrease in rudder force rather than by an actual hinge moment reversal. A comparison of the original and modified conditions of the airplane is shown in figure 2, where rudder force and deflection are plotted against sideslip angle.

The curves of figure 2 show that the increased fin area caused a considerable increase in rudder angle and rudder force required to attain a given sideslip angle and, hence, had the desired effect of restricting the sideslip. It does not necessarily follow, however, that there was a reduction of directional control or increase of rudder pedal forces required of the pilot for essential conditions of operation of the airplane. In the condition of primary concern from this standpoint, single-engine flight, the rudder forces for equilibrium at zero yaw were not affected by the additional fixed fin area. In the rudder-free mode of operation, the additional directional stability made possible yawing equilibrium under conditions where the asymmetric moments had produced the tail stall and directional instability in the original airplane.

REASONS FOR INADEQUATE DIRECTIONAL STABILITY

The reasons for a general tendency toward inadequate directional stability at large angles of yaw, seem to lie in the effect of refinement in fuselage shape and a general increase of wing loading. Airplane fuselages have become large in proportion to the wings and at the same time have become aerodynamically refined in shape and therefore increasingly unstable. Designs have approached in appearance an airship with stub wings rather than the so-called "flying-wing type." The unstable moment that the fin must overcome in order to make the airplane directionally stable is contributed chiefly by the fuselage, the contribution of the wings, except with deflected ailerons, being generally small. This fact indicates that the fin should be proportioned according to the size of the fuselage rather than in accordance with the wing area. In other words, it is hardly to be expected that the fin area which was able to overcome satisfactorily the unstable fuselage moments on an airplane having a wing loading of 15 pounds per square foot, can be reduced to one-half that area when the wing loading is increased to 30 pounds per square foot by reducing the wing area one-half. Particularly is this true if the fuselage has at the same

time been refined in shape and thereby allowed to retain its instability to very large angles of yaw. A more final criterion that is usually applied when the wind-tunnel data on a particular model are available, is the slope of the curve of yawing moment coefficient against angle of yaw or sideslip. A thought worth keeping in mind in this connection is the significance of the fact that the yawing moment coefficient is defined as $\frac{\text{yawing moment}}{qSb}$ where q is the dynamic pressure, S the wing area, and b the wing span. Since the moment is divided by the product of wing area and wing span, a reduction in wing area for a given fuselage size gives an erroneous impression, for it tends to increase the value of the coefficient for a given value of the moment. If the reduction of wing area is such that the wing retains the same geometric plan form and the moment actually remains constant, the value of the coefficient will increase in proportion to the 3/2 power of the ratio of wing loadings. If the wing loading is doubled, for example, this ratio would indicate that the yawing moment coefficient should be practically trebled. Thus an adjustment of the slope used as a criterion in accordance with this effect of wing loading appears necessary.

CHARACTERISTICS OF DORSAL FINS

Airplanes which have adequate stability for normal flight may suffer a reversal of rudder force when angles of yaw sufficient to stall the vertical tail surfaces are reached. This condition is indicated in the wind tunnel when the yawing-moment curve with rudder free reaches zero at a point other than zero yaw and signifies that the rudder floating angle is greater than the rudder angle required for equilibrium of yawing moments. An effective means for preventing this occurrence is by the use of dorsal fins which have the effect of decreasing the unstable moment of the fuselage at large angles of sideslip without exerting much influence on the directional stability at small angles. Wind-tunnel data (unpublished) which illustrate the effect of dorsal fins are given in figure 3. That their function is primarily one of reducing unstable fuselage moments is shown by the fact that the yawing moment slope at small angles of yaw is unchanged. At large angles of yaw, however, their effect is pronounced. At 20° yaw, for example, fins of only $2\frac{1}{2}$ percent of the fuse-

lage diameter in width reduced the unstable fuselage moment by approximately 40 percent. Fins of greater width were proportionately more effective. Although obviously dorsal fins cannot take the place of conventional fin area at low angles of yaw, they are an effective and convenient means of increasing directional stability in the region where tail stalling is encountered. In this respect their effect is one of making the well streamlined fuselage behave more like those with flat sides and sharp corners.

SIMPLIFIED CRITERION FOR SATISFACTORY FIN AREA

Regardless of the amount of analytical work that may be applied to a given design, a decision as to the fin area required usually involves consideration of a relatively simple criterion that evaluates past experience in relation to the new design. The one used subsequently has the merit of involving fundamentally important factors, namely, the fuselage dimensions in relation to the fin area. This treatment of the subject is somewhat similar to that discussed by Diehl in reference 1. According to the equation given for the yawing moment for an elongated ellipsoid of revolution by Munk in reference 2, the unstable moment of such a body can be regarded as proportional to D^2L, where D is the maximum diameter and L the length of the body. Fuselages, particularly those of modern types, would appear to simulate such a body well enough to fit the requirements of a criterion based on these dimensions. The stabilizing moment of the fin to a first approximation can be considered as proportional to the product of the fin area S_f and the tail length l. The ratio of these two quantities gives $\frac{lS_f}{D^2L}$ and then may be considered as an index to be employed in the comparison of different airplanes. In this simple form the criterion obviously does not take into account numerous variables that occur in fuselage shape and the effectiveness of fin area of a given amount. There are, for example, considerable data that indicate double tails, at least in certain arrangements, that are not as effective as a single tail of equal area; that the directional characteristics of low-wing airplanes differ considerably from those of a comparable high-wing airplane; and that wing dihedral and aileron yaw are contributing factors. Furthermore, it does not take into account the manner in which the verti-

cal tail is divided by the fin and rudder and does not account for the effect of engine nacelles in the wing. In spite of all these shortcomings, many of which are necessary because of lack of knowledge of the magnitude of the effects involved, the criterion has the advantage that it does relate the two major factors in a logical manner and a comparison of the values obtained for several airplanes has proven instructive. Such a comparison is made in table I.

It appears that all of the multiengine airplanes for which information was available were in the same category as regards the possibility of experiencing the rudder-force reversal, with the exception of the airplane which was modified by increasing the fin area. The value of the criterion, $\frac{lS_f}{D^2L}$, for this airplane was 0.50. It is also true, however, that the directional stability of most of these airplanes was adequate in all other respects, except at large angles of yaw. In these cases the reduction of fuselage yawing moments by a proper application of dorsal fins presumably would have eliminated the instability due to tail stalling without requiring an increase in the conventional fin area. It would then appear that smaller values of the criterion will suffice for airplanes equipped with dorsal fins or those in which the afterbody of the fuselage is shaped in such a way that the unstable moments are not retained at large angles of yaw.

CONCLUDING REMARKS

In conclusion, it is desired to repeat that the directional instability at large angles of sideslip is associated with fin stalling but that fin stalling does not necessarily produce instability. It is when the stalling condition can be produced by a smaller rudder angle than that at which the rudder tends to float with the fin stalled, that trouble occurs. It follows that a reduction in the rudder floating angle for the stalled condition, as well as an increase in the rudder angle required to produce the stalled condition, would be beneficial. In order further to clarify the problem and provide the proper quantitative basis for design, considerable research on the characteristics of various tail forms and on the flow conditions at the tail are needed.

Also, it is desired to point out that it is not the intention of this paper to give the impression that because one aspect of the problem is emphasized others are not considered important. One worth noting is that enlarging the conventional fin will not increase the ability of the airplane to develop cross-wind force and, hence, will not eliminate annoying changes in course when rough air causes deviation of lateral attitude of the airplane.

Langley Memorial Aeronautical Laboratory,
National Advisory Committee for Aeronautics,
Langley Field, Va., September 18, 1940.

REFERENCES

1. Diehl, Walter S.: Engineering Aerodynamics. Ronald Press, revised edition, 1936.

2. Munk, Max M.: Fundamentals of Fluid Dynamics for Aircraft Designers. Ronald Press, 1929.

TABLE I. Comparison of Directional Stability of Multiengine Airplanes

Type	Airplane		$\frac{l S_f}{D^2 L}$	Stable	Rudder reversal in side-slip
Multiengine low- or mid-wing	Single tail	(A	0.38	Yes	Yes
		(B	.30	Yes	Incipient
		(C	.28	Yes	--
		(D	.24	Yes	Incipient
		(E	.24	-	--
	Twin tail	(F	.37	Slight oscillation	Yes
		(G	.28	Do.	Yes
	Triple tail (G modified)		.50	Yes	No

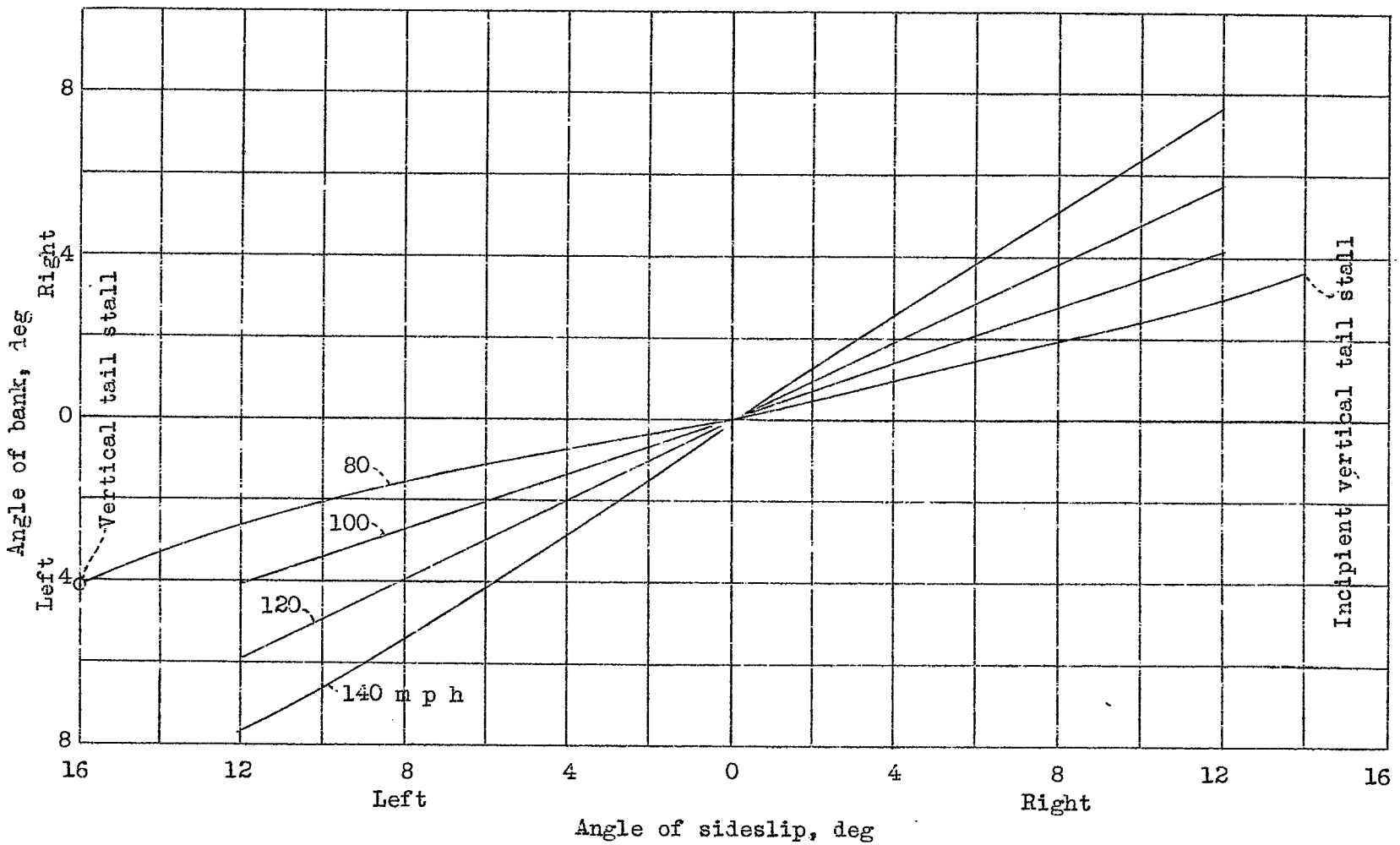

Figure 1.- Relation between angle of bank and angle of sideslip for a typical airplane.

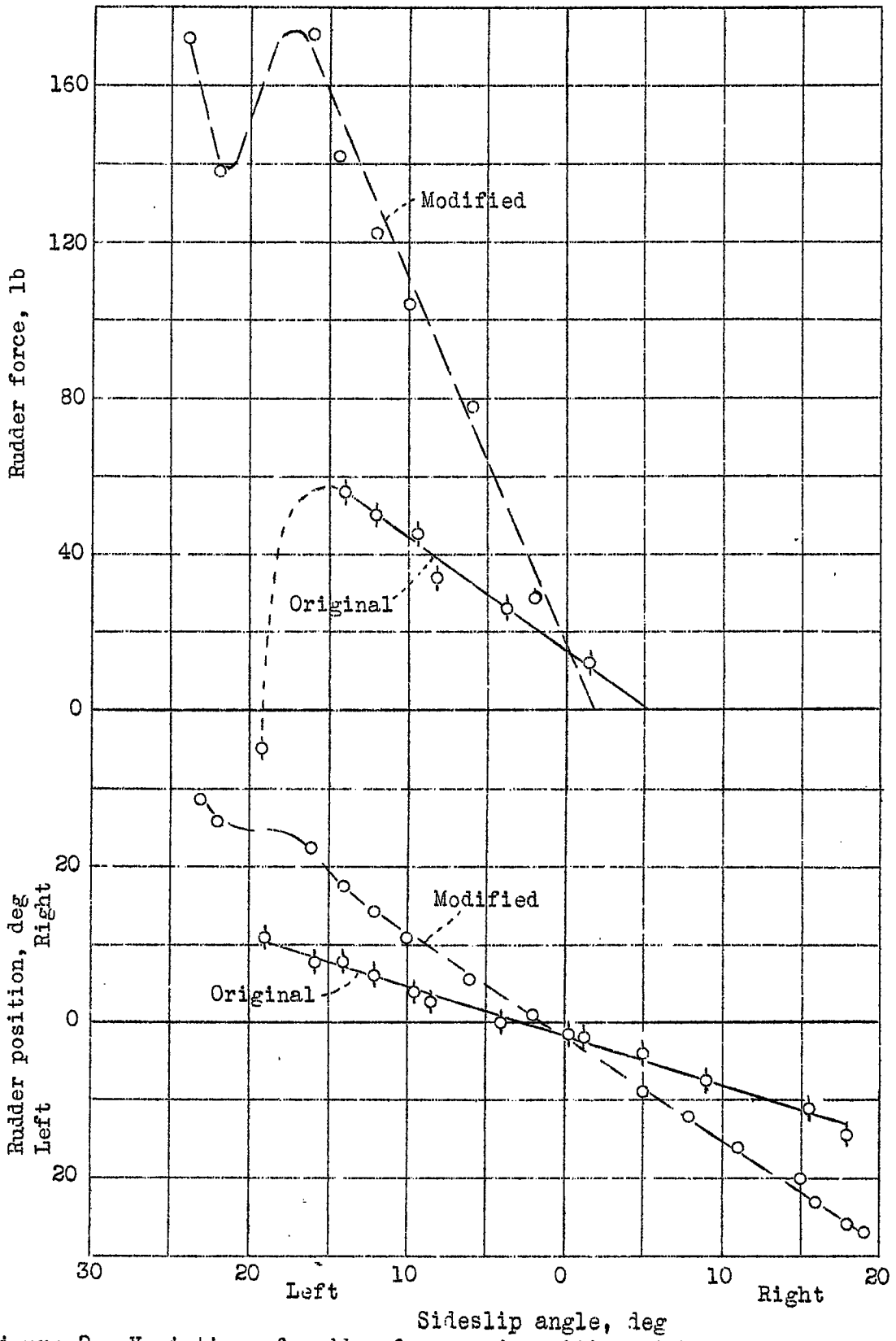

Figure 2.- Variation of rudder force and position with angle of sideslip for twin-engine airplane in original condition and as modified with additional fin area (flap up, gear up, power on).

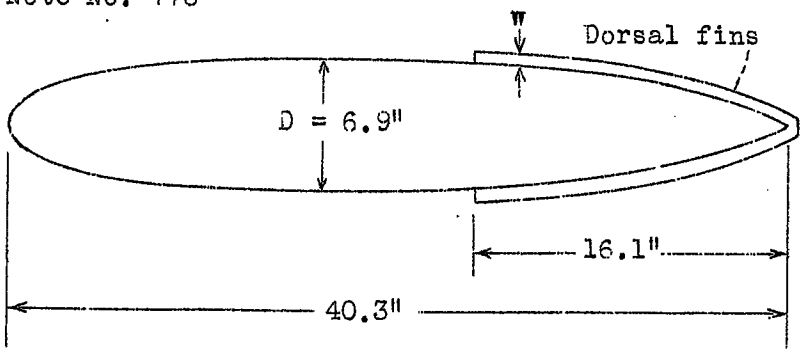

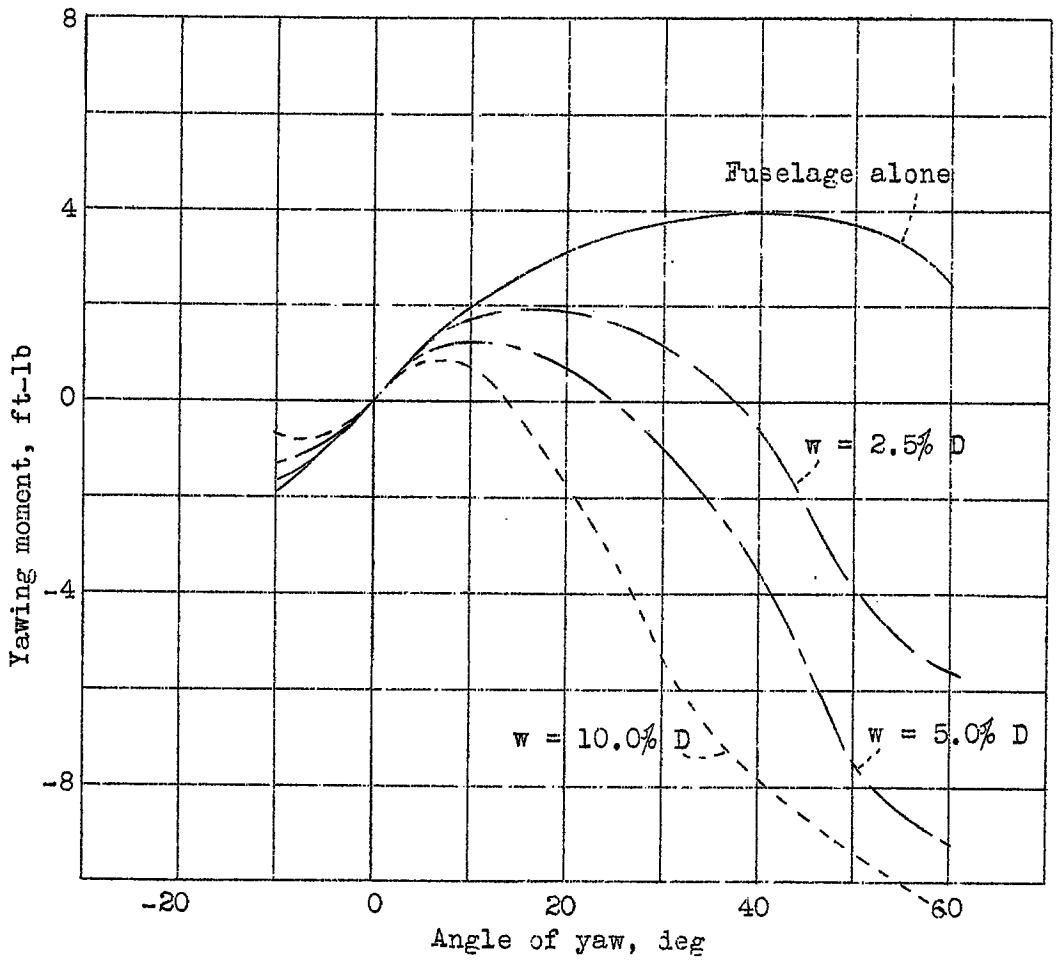

Figure 3.- Effects of dorsal fins on the yawing moments of a streamline fuselage of circular section (q = 16.37 lb/sq ft).