REPORT No. 704

A HIGH-SPEED MOTION-PICTURE STUDY OF NORMAL COMBUSTION, KNOCK AND PREIGNITION IN A SPARK-IGNITION ENGINE

By A. M. Rothrock, R. C. Spencer, and Cearcy D. Miller

SUMMARY

Combustion in a spark-ignition engine was investigated by means of the NACA high-speed motion-picture camera. This camera is operated at a speed of 40,000 photographs a second and therefore makes possible the study of changes that take place in time intervals as short as 0.000025 second. When the motion pictures are projected at the normal speed of 16 frames a second, any rate of movement shown is slowed down 2500 times.

Photographs are presented of normal combustion, of combustion from preignition, and of knock both with and without preignition. The photographs of combustion show that knock may be preceded by a period of exothermic reaction in the end zone that persists for a time interval of as much as 0.0006 second. The knock takes place in 0.00005 second or less.

INTRODUCTION

In 1924, the National Advisory Committee for Aeronautics completed the development of a high-speed spark-photography camera, which was used to study the formation and the development of fuel sprays for Diesel engines. Because the time for injection of the fuel amounted to about 0.003 second, it was necessary that the camera operate at much faster speeds than those generally used. The photographs were exposed by the arcs from a bank of 25 electric condensers, which were discharged at the rate of 4000 discharges a second. The discharges took place across a common spark gap, the 25 flashes of light occurring in 1/160 of a second. The duration of each flash was between 1/100000 and 1/1000000 of a second. This speed of discharge (the exposure time) was so fast that the photographic images formed by the light from the condenser discharges could be recorded on a film moving at a high rate of speed. No shutter was required on the camera, and the film was mounted on a drum that revolved continuously while the photographs were being taken. High-speed motion pictures could be recorded of objects that were not themselves a source of light. Results of these tests were published in 1927 (reference 1).

In order to photograph the combustion within an engine cylinder, it was necessary to have a high-speed motion-picture camera with a shutter arrangement so that the light from the continuous source would not make a continuous streak on the film. Such a camera became available in 1933 (reference 2). The NACA had, in the meantime, developed a single-cylinder engine in which the sides of the combustion chamber were formed by glass windows (reference 3). This camera (reference 2) together with the single-cylinder engine made it possible to take motion pictures at a rate of 2400 frames a second of the fuel injection and of the combustion within the combustion chamber of a Diesel engine or of a spark-ignition engine. When these photographs were projected at a rate of 16 frames a second, the motions of the spray and of the combustion were slowed down 150 times. The photographs taken with this camera had an exposure time of about 1/7000 of a second at 2400 frames a second. This camera had the disadvantages of taking photographs at a slower rate and with a longer exposure time than did the NACA spark-photography camera, but it had the advantage of taking a much greater number of photographs and of taking high-speed motion pictures of a light source.

Photographs of combustion taken at rates up to 5000 frames per second have been reported by Rassweiler and Withrow (reference 4) and by Boyd (reference 5).

The motion-picture camera described in reference 2 was used extensively in the study of combustion in both the Diesel and the spark-ignition engine. It provided a picture of the movement of the sprays and of the combustion within the engine cylinder. The speed of operation, 2400 frames a second, was not sufficiently fast to permit a close study of the movements within the combustion chamber, and the individual frames of the motion pictures had to be viewed as "stills" if the combustion propagation was to be studied in detail. For this reason, the NACA decided to design a camera that would work at higher speeds. The camera, which was invented by one of the authors, Cearcy D. Miller, was completed late in 1938 and was successfully tested in the early part of 1939. The speed of operation is 40,000 photographs a second. When the motion pictures taken with this camera are projected at the normal rate of 16 frames a second, the motion is slowed down 2500 times.

In this report high-speed motion pictures are pre-

sented that were taken with the new camera in a study of normal burning, knock, and preignition in a spark-ignition engine.

APPARATUS

COMBUSTION APPARATUS

The NACA combustion apparatus as used for investigating combustion in a spark-ignition engine is described in reference 6. The apparatus consists of a 5- by 7-inch engine coupled to an electric motor, which drives the engine at the test speed. A single charge of fuel is injected into the combustion chamber of the engine during the inlet stroke, and the photographic data are recorded during the firing and the burning of this single charge. The cylinder head and barrel are held at the test temperature by circulating heated glycerin through the cooling passages of the cylinder and the head. The operation of the engine under its own power for a single cycle eliminates the effects on the combustion process of residual exhaust gases and of any undisclosed hot spot. Time-pressure records of the single explosion can be made through the use of the engine indicator described in reference 7.

A diagrammatic sketch of the combustion apparatus is shown in figure 1. Two poppet valves are mounted in one side of the pent-roof head, one for inlet and one for exhaust. This arrangement differs from that of reference 6 in which each valve was used for both intake and exhaust. In the present tests, the inlet valve was shrouded to give a tangential swirl to the incoming air and to give a high degree of reproducibility to the data (references 8 and 9). The glass windows were inserted in the other side of the head, as shown in the sketch. There are six spark-plug openings in the head, indicated by the letters E through J (fig. 1). In the present tests a single spark plug was mounted in opening E. The engine was operated at a speed of 500 rpm. Previous tests have shown that the type of air flow is the same at this speed as at higher speeds.

The fuels used for the tests were C. F. R. reference fuel S–1 and blends of S–1 with C. F. R. reference fuel M–2. Fuel S–1 is a commercial grade of 2,2,4-trimethyl pentane (iso-octane) having an octane number of about 99.3. The M–2 fuel has an octane number of 11 to 20, depending on the method of rating.

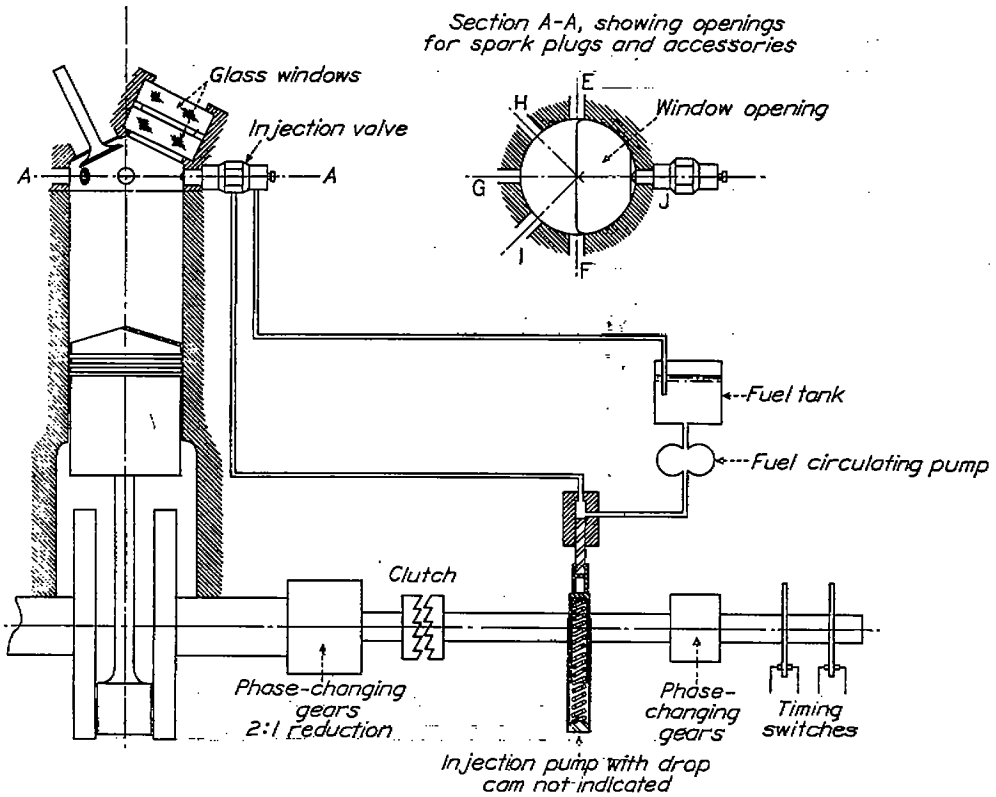

FIGURE 1.—Diagrammatic sketch of NACA combustion apparatus.

The following engine operating conditions were kept constant throughout all the tests of the present report: Spark advance, 20°; engine-coolant temperature, 250° F; compression ratio, 7.0; engine speed, 500 rpm; fuel-air ratio, approximately 0.08.

A description of the NACA high-speed motion-picture camera cannot be given at this time.

OPTICAL SET-UP FOR SCHLIEREN PHOTOGRAPHS

In photographs of combustion, schlieren photography has been found to give greater detail than direct flame photography. A diagrammatic sketch of the schlieren set-up is shown in figure 2. The light from the spherical source (1) is brought to a focus by the condensing lens (2) on the elliptical mirror (3).

Mirror (3) is a plane mirror, but its outline is an ellipse having major and minor axes of such ratio that the mirror appears circular when viewed from the direction of the light source (1) or from the direction of the schlieren lens (4). This elliptical mirror is located at the principal focus of the schlieren lens (4) so that the light rays reflected from any single point on the surface of the elliptical mirror will be parallel after passing through the schlieren lens (4). These rays strike mirror (5) and are reflected through the windows (6) of the engine onto the mirror (7) mounted on the piston. The rays are reflected back by the mirror (7) on the piston top, again passing through the windows (6), reflecting from the mirror (5), and passing through the schlieren lens (4). Upon their return through the schlieren lens (4), the rays are again brought to a focus, forming an image of the elliptical mirror (3) on the surface of the elliptical mirror (3) itself.

The elliptical mirror (3) is in the same plane with a black diaphragm (8), which has an elliptical aperture surrounding the mirror. This arrangement results in an annular aperture between the mirror and the diaphragm as seen from the direction of the schlieren lens (4). Schlieren lens (4), in conjunction with the lens of the camera (9), forms an image of the contents of the combustion chamber on the film in the camera by means of any light that may pass through the annular aperture between the elliptical mirror (3) and the diaphragm (8).

By a very slight angular adjustment of the mirror (5), the image of elliptical mirror (3) formed by the rays returning from the engine through schlieren lens (4) is slightly deflected so that a very small crescent-shaped portion of this image falls on the annular aperture instead of on the elliptical mirror. Then, as long as there is no deflection of rays by the contents of the combustion chamber, the light rays forming this crescent-shaped portion of the image pass through to the film and form a uniformly illuminated image of the shape of the combustion chamber.

Light rays will be deflected upon passing through any local stratifications of gases having indices of refraction different from the index prevailing throughout the combustion chamber and presenting nonparallel surfaces. Rays will also be deflected upon passing through any stratification where the index of refraction varies continuously along a line perpendicular to the light rays. Such deflected rays, on leaving the combustion chamber, are no longer parallel to rays coming from the same point on the surface of the elliptical mirror but passing through other parts of the combustion chamber. The deflected rays will consequently be focused by the schlieren lens (4) to a point different from that for rays coming from the same point on the surface of the elliptical mirror but passing through other parts of the combustion chamber. The general result is that either more or less of the light which has passed through the stratifications in the combustion chamber passes through the aperture between elliptical mirror (3) and diaphragm (8) than would have passed through this aperture if the rays had not been deflected. Consequently, either bright spots or dark spots are formed on the film at the locations corresponding to the nonparallel surfaces of the gas stratifications within the combustion chamber. For this reason, any marked variations in the index of refraction of the gas along any line perpendicular to the light rays passing through the chamber will be recorded on the photographic film.

Combustion is accompanied by a steep temperature gradient and, consequently, by appreciable changes in the index of refraction of the gases. In any zone in which combustion has been completed, the temperature again becomes uniform although it remains much higher than before combustion had traversed the zone. The rear of the combustion zone as well as the front is

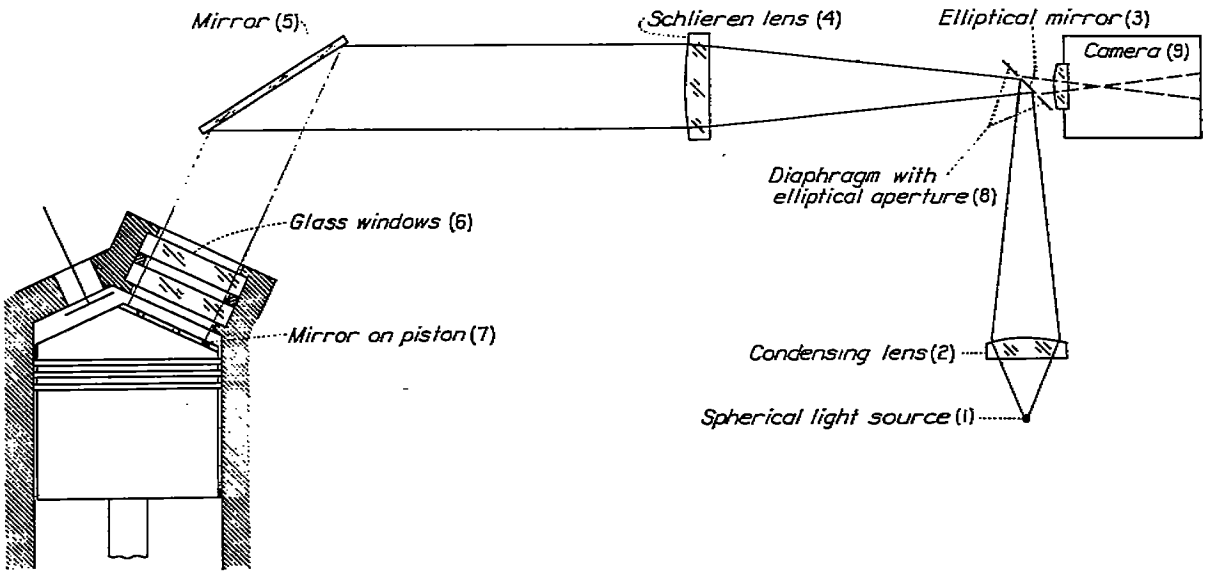

FIGURE 2.—Diagrammatic sketch of optical system used in taking schlieren photographs of combustion.

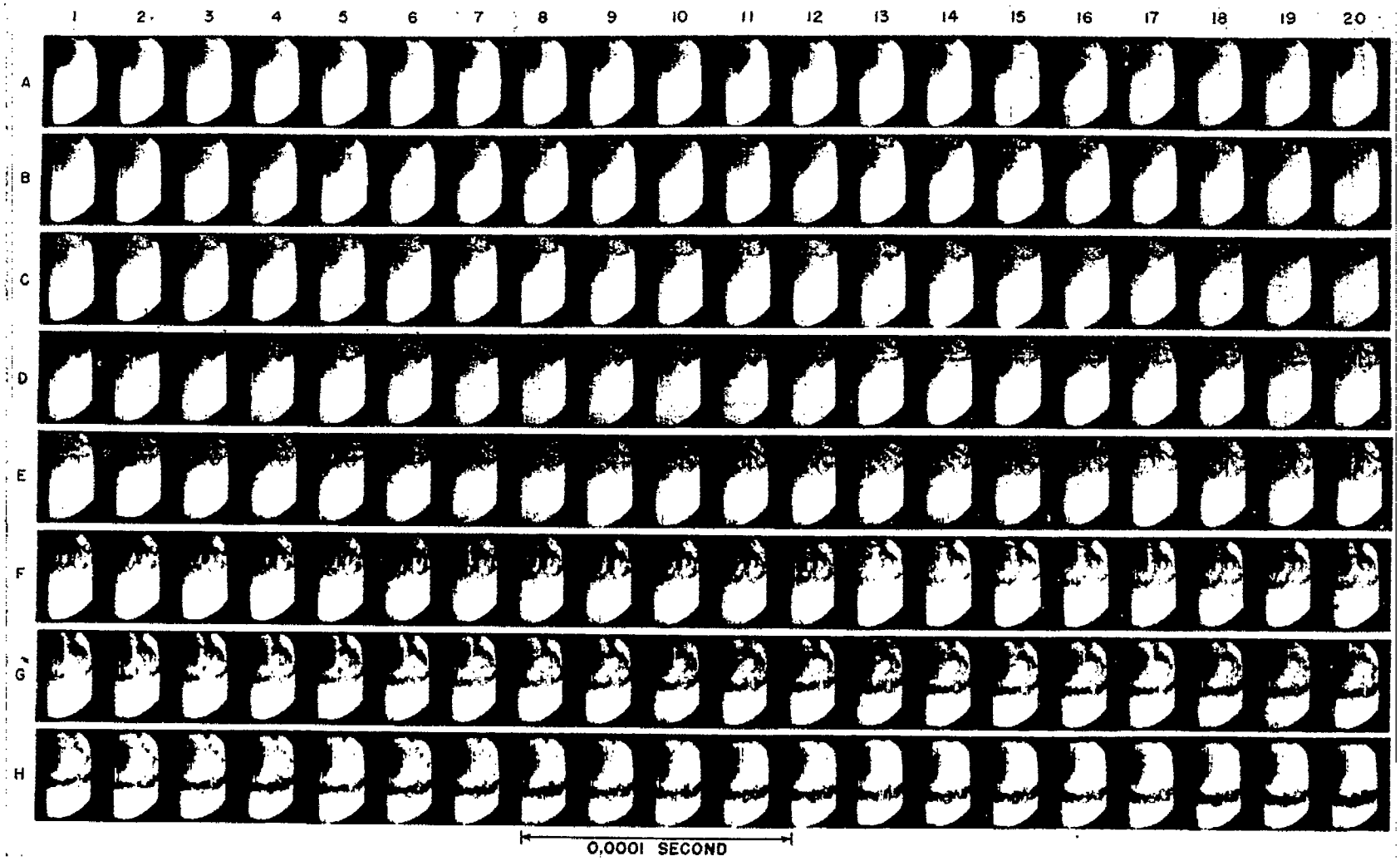
1
2
3
4
5
6
7
8
9
10
11
12
13
14
15
16
17
18
19
20
A
B
C
D
E
F
G
H
0.0001 SECOND

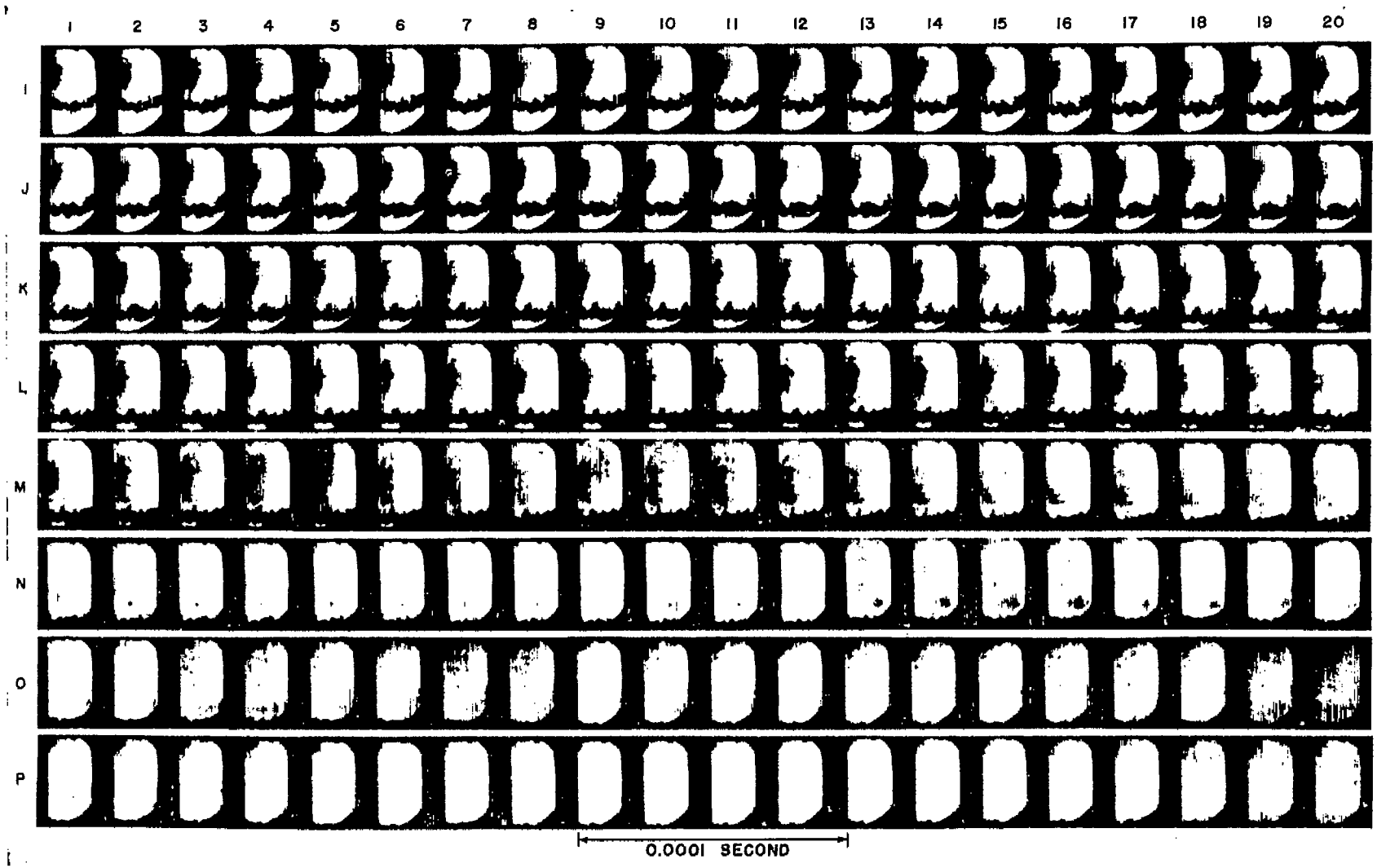

FIGURE 3.—High-speed motion pictures of a nonknocking explosion in a spark-ignition engine. Fuel, S-1; one spark plug; spark advance, 20°.

therefore recorded by schlieren photography. The annular aperture between the elliptical mirror (3) and the diaphragm (8) is sufficiently small that the illumination from normal combustion does not record on the film. The photographs are thus a record of the combustion as indicated by the temperature changes within the combustion chamber.

DISCUSSION AND RESULTS

In reference 10 some of the effects of the different engine factors on knock and on preignition within the engine cylinder are described. The conclusion was presented that whether the fuel knocked depended primarily on the interrelation between the end-gas density and the end-gas temperature within the combustion chamber. It was also suggested that whether a fuel preignited depended on whether some hot spot in the engine reached a specific temperature that would cause the ignition of the particular fuel in question. The present report presents information on the manner in which these forms of combustion take place, as well as a description of normal combustion. It should be borne in mind throughout a reading of the present report that engine operating conditions were maintained constant for all of the tests, except that preignition was obtained by insertion of a hot spot within the cylinder head. Nonknocking combustion, combustion with light knock, and combustion with severe knock were obtained by use of different fuels, no other change being made. It may therefore be assumed that these different types of combustion, as shown in this report, were with the same end-gas state.

NORMAL COMBUSTION

Figure 3 is a composite photograph of normal combustion from one spark plug located at E (fig. 1). The photographs were printed from a motion-picture film of a single explosion taken at the rate of 40,000 photographs a second. The photographs are read consecutively from left to right; that is, A–1, A–2, A–3, . . . A–19, A–20, B–1, B–2, . . . P–19, P–20. In row A the combustion front is barely visible at the top of frame A–1. In general, the combustion zone is indicated by the dark mottled region in the gray field. The uniformly dark region in the upper left of the frames is caused by uneven schlieren illumination and has no other significance. As the pictures proceed, the combustion front travels downward.

The travel between successive photographs is extremely small because the time interval between photographs is 1/40000 of a second. By frame A–20, the combustion front is clearly visible. As the combustion front progresses in row B the area behind the front remains mottled, which indicates temperature gradients throughout this region. A comparison of two successive frames in any column determines the travel of the combustion front in 1/2000 of a second. A comparison of frame A–20 with frame B–20 shows that, in this 1/2000 of a second, the general shape of the combustion front has remained about the same. The apparent combustion zone extends from the combustion front to the top of the field and, throughout this region, there are apparent temperature gradients. In row C the front remains fairly straight. In row D a greater irregularity is visible in the front, two tongues of combustion proceeding somewhat ahead of the rest of the front. In row E a horizontal line can be drawn across the combustion front, but the front itself is rather wavy. In row F the upper right-hand portion of the field again becomes clear, which indicates that in this zone the temperature has become uniform and the combustion has been completed. It must be emphasized that the depth of combustion in a direction normal to the photographs cannot be determined from the photographs.

By the end of row G the combustion has taken on an appreciably different appearance. There is now a narrow combustion zone with a tail of mottled area near the right side of the field. By the end of row H, the tail has disappeared and only the narrow combustion zone remains. This zone has reached a point about two-thirds of the distance across the combustion chamber. A comparison of row H with row E shows that the depth of the combustion zone in the direction of flame travel has greatly decreased in the time interval (3/2000 sec) occurring between the taking of the photographs in the two rows.

It has been suggested that the apparent depth of the combustion zone in the direction of flame travel, as indicated in the schlieren photographs, results from the facts that the combustion front is convex in the plane normal to the photographic plane and that the combustion zone is actually of infinitesimal depth. If this suggestion is a fact, photographs taken in the side plane for frames E–20 and H–20 would appear as in figure 4b and 4e, respectively. In this case, although the combustion front might be of infinitesimal thickness, the photographs would show a zone of appreciable apparent depth. Based on this argument, it is difficult to construct the view normal to the photographic plane of some frame such as G–11 (fig. 3). A great deal of the theoretical analysis of combustion propagation has been built on the theory that the combustion front is of extremely small if not infinitesimal thickness but, in the case of combustion within an engine cylinder, there is little experimental evidence available to support this contention. Although the present photographs do not prove that the combustion zone is of finite and appreciable depth, they suggest that such is the case. The true condition probably lies between 4b and 4c or between 4e and 4f. Recent tests completed at the National Bureau of Standards (reference 11) have also indicated that the combustion zone is of appreciable depth. Results presented by Withrow and Cornelius (reference 12) indicated an apparent combustion depth of the same order of magnitude as those presented herein.

Another possible explanation of the depth of the mottled area in the photographs, which would be consistent with the assumption of infinitesimal flame thickness, is that the flame, after passage through any given volume of gas, leaves temperature gradients behind it which require a finite time for their elimination by conduction and radiation of heat. An effort will be made at a later date to determine whether temperature gradients, unsupported by combustion, can persist long enough to cause the depth of mottled area evident in the photographs.

For the combustion period from row H through row P of figure 3, the combustion zone appears narrow in depth and approximately horizontal. Slight changes occurring in the shape of the combustion front can be seen by comparing two successive frames in any one column. By frame N–3, the combustion front has reached all visible portions of the combustion chamber. The small dark area at the bottom of the field of view indicates that temperature gradients existed through the recording of frame P–20. The time interval from frame N–3 to frame P–20 is 1/700 of a second.

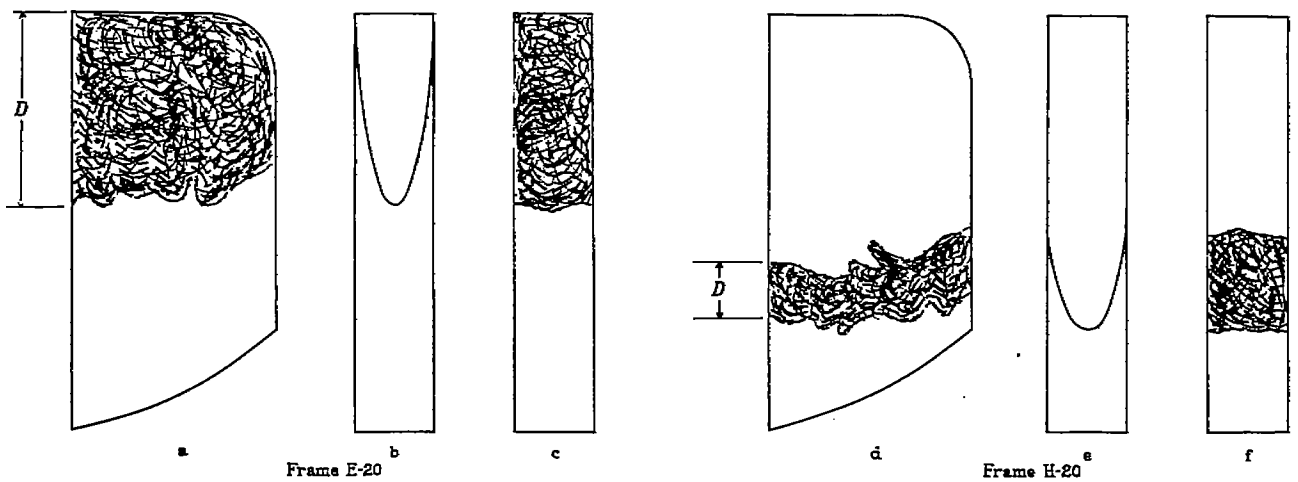

FIGURE 4.—Sketches to show extremes of possible depth of combustion zone. Diagrams b and e show combustion zone as thin shell. Diagrams c and f show combustion zone with depth equal to apparent depth as indicated by views a and d. D is the apparent depth of the combustion zone.

KNOCKING COMBUSTION

Figure 5 shows high-speed motion pictures recorded when knock occurred in the charge because of the use of a fuel of lower antiknock value than in the case of figure 3. The combustion front is first clearly visible in row C. In general, its appearance is similar to that for the nonknocking combustion. In this particular instance the combustion front is more rounded. This variation from figure 3 represents the variation that occurs for two records taken under the same test conditions. As is the case with the previous record, the combustion zone has an appreciable apparent depth in the direction of flame travel. In row H the rear of the combustion zone starts to become clear and, by the end of row I, the zone has considerably narrowed. A mottled area is visible in row J along the left side of the chamber, indicating temperature gradients in this region. As is the case in the previous record, the combustion front is approximately horizontal. No sudden changes appear in the combustion process previous to knock. The impression given is that the transformation of the chemical energy into pressure is regular and reasonably well controlled. The front itself becomes more irregular in row J. In row K these irregularities are well defined.

In row L the portion of the end gas in the field of view becomes confined to the lower left section. Toward the middle of row L, definite striations begin to appear within the end gas. These striations become continuously visible after frame L–6. After frame L–6, the field in the end zone becomes darker, and it becomes more difficult to differentiate between the combustion front and this darkening. This characteristic of the combustion did not appear in the nonknocking record. The darkening of the field indicates that temperature gradients are being created in the end zone. The fuel, however, has not knocked in the sense that the characteristic vibrations of the gas which occur with knock are not as yet visible.

In frame M–10, the demarcation between the combustion front and the end zone has disappeared. In frame M–11, the knock first appears. It is indicated by the bright spots along the lower right-hand edge of the field and by the slight blurring of the combustion zone. The appearance of the field changes decidedly between M–11 and M–12. In M–12 the dark section in the lower left portion of the field has disappeared, and the field is more or less uniformly lighted. The knock is completed in these two frames, that is, in 0.00005 second. The actinic value of the light that radiates from the combustion chamber after knock occurs is sufficiently high to record on the photographic film. Previous to knock the light radiating from the combustion did not record on the film. Apparently, following knock, the actinic value of the illumination originating from the combustion is increased many fold.

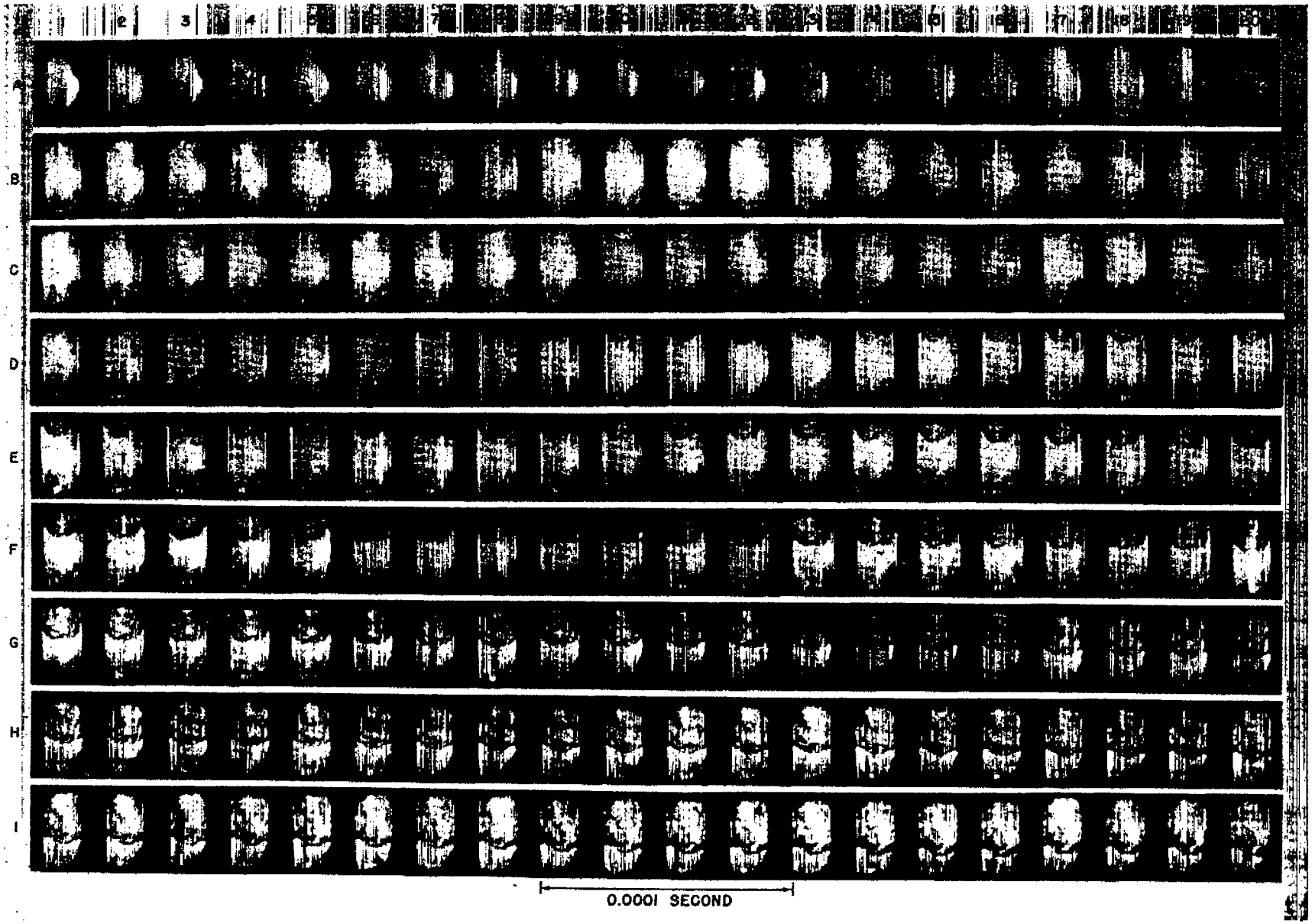
A
B
C
D
E
F
G
H
I
0.0001 SECOND

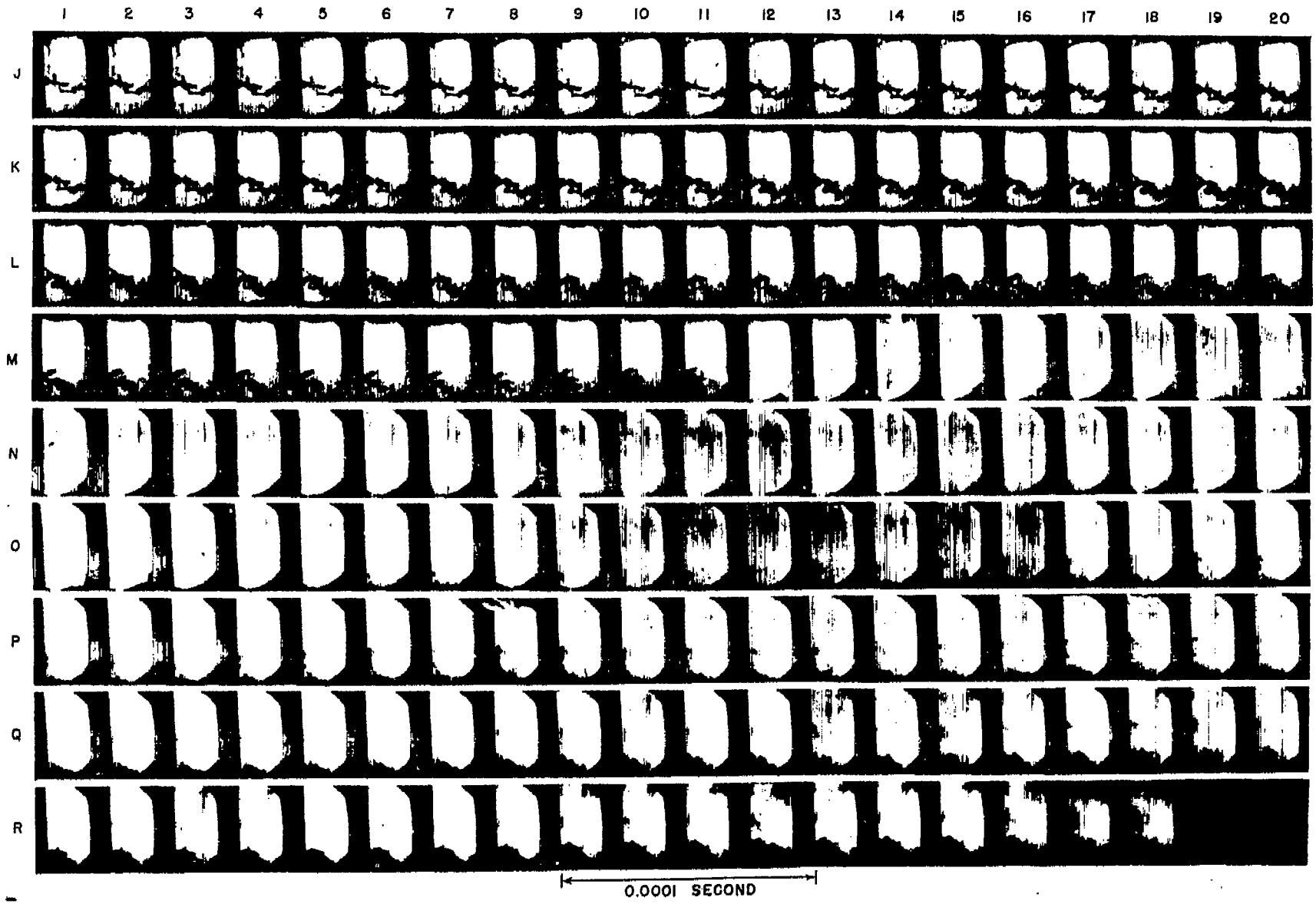

FIGURE 5.—High-speed motion pictures of a knocking explosion in a spark-ignition engine. Fuel, 50 percent 95 octane gasoline and 50 percent M-2; one spark plug; spark advance, 20°.

It is possible that these apparent exothermic reactions in the end zone are sufficiently intense to emit visible light. In reference 4 a luminosity in the end zone was recorded before the flame front traversing the combustion chamber reached the end zone. Similar luminescence has been recorded in this Laboratory (reference 6) and seems to accompany severe knock.

These photographs give a new insight into the phenomenon of knock. They show that a time interval of about 0.0006 second occurred between the start of the apparent exothermic reactions in the end zone and the appearance of the pressure waves and the brilliant illumination.

The gas vibrations cannot be easily observed in these reproductions of the records; but, when the photographs are shown as motion pictures, the vibrations are visible.

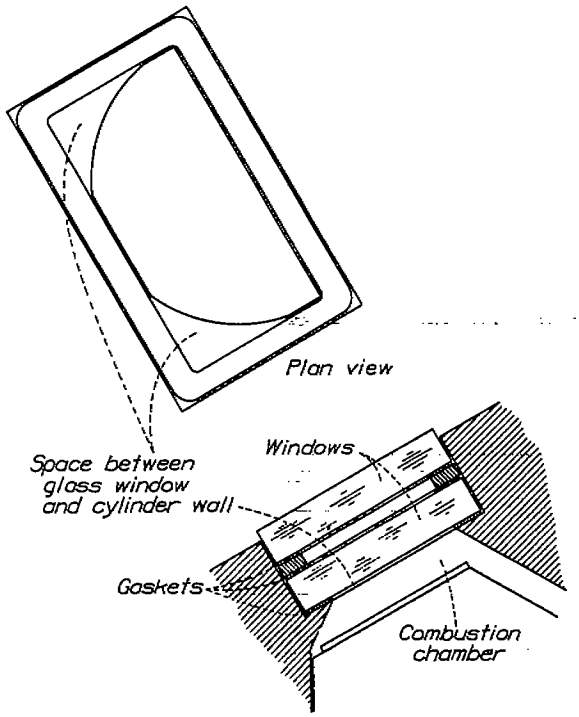

FIGURE 6.—Details of window arrangement in cylinder head.

The frequency of the vibrations is indicated by the light area that appears and disappears in the lower right of the combustion chamber. A space 1/16 inch deep is formed by the gasket between the rectangular window and the cylinder wall, as shown in figure 6. The gas in this space apparently becomes luminous and nonluminous alternately as it is compressed and expanded by the vibration of the gas in the cylinder. The luminosity in this space reaches a maximum in frames M–12, M–16, M–20, N–9, and O–1 of figure 5. These data indicate that the compression and the expansion of the gas in this space started at a frequency of 10,000 cycles a second and decreased to a frequency of 3300 a second.

In frame O–11 (fig. 5), smoke appears in the knocking zone at the bottom of the chamber. This smoke grows in volume through row P, becomes clearly visible in row Q, and continues to travel toward the opposite side of the combustion chamber through the rest of the photographs. No smoke was visible in the nonknocking records. These data indicate that knock is a sudden completion of burning in a region in which partial combustion has taken place. This explanation has been discussed in reference 6. In this reference it was pointed out that, with severe knock, there is a short period preceding the formation of the pressure waves in which there is a marked increase in the rate of pressure rise within the combustion chamber and a reverse movement in the combustion front. When the motion pictures presented herein are projected, this momentary reverse movement in the combustion front is visible. As the front proceeds into the end zone, it appears to stop momentarily at the time the field in the end zone starts to show the darkening already discussed. The combustion front then proceeds again in the forward direction. Additional high-speed motion pictures taken with this apparatus but not published have shown that, as the intensity of the knock is decreased, the time interval during which reactions are indicated in the end zone prior to knock decreases. With light knock these reactions do not appear and the combustion front travels through the end zone before knock occurs.

Again it is emphasized that the photographs show the combustion in only one plane so that, even though the photographs record the combustion front reaching the wall of the combustion chamber, there may be pockets of unburned gas in which the exothermic reactions take place. Nevertheless, there is no indication of these reactions in the records for light knock taken with the high-speed camera.

For the present, knock will be considered to be the reaction that took place as frames M–11 and M–12 of figure 5 were recorded. After the occurrence of the knock, the combustion gases throughout the chamber show (when the motion pictures are projected) the vibration that has long been associated with knock. The light radiated by the gases becomes highly actinic with respect to the photographic film.

The results presented in this paper and in reference 6 indicate that the phenomenon of knock takes place as follows: The combustion front, as it progresses across the combustion chamber, compresses the end gas adiabatically. If the compression is sufficient, exothermic reactions are started within the end gas that are of sufficient intensity to cause an increase in the instantaneous rate of pressure rise throughout the combustion chamber. The reactions may also take place with sufficient rapidity to result in an expansion within the end zone that causes a momentary hesitation of the oncoming combustion front, but they are not sufficiently violent to cause the pressure wave within the combustion chamber that results in the audible knock. These reactions in the end zone continue for a finite time interval of as much as several ten-thousandths of a second. After they have spread throughout the end zone, a very sudden release of energy occurs (in less than 0.00005 sec) in or near the end zone. This

reaction is assumed to be the sudden completion of burning in a partly burned region, and it causes the pressure wave within the gas that results in the audible knock. This explanation of knock is based on the idea that the combustion zone is at all times of finite depth in the direction of flame travel. The primary stage of reactions in the end zone decreases as the intensity of the knock is decreased and may entirely disappear. If the primary stage disappears, the combustion front proceeds across the combustion chamber and the knock is the sudden completion of burning in or near the end zone. As to an explanation of the nature of the reaction accompanying this sudden completion of burning and release of energy, which is termed "knock," the high-speed motion pictures give no clue except the one fact that the illumination accompanying this reaction is many times more actinic with respect to the photographic film than is the illumination accompanying the previous reactions.

PREIGNITION

Figure 7 shows the results that were obtained when the charge was preignited by a hot spot mounted in opening F (fig. 1). The hot spot consisted of an electrically heated coil of wire. The temperature of the coil was adjusted to about 1500° F, at which temperature the heated wire ignited the fuel-air charge before the spark jumped the gap in the spark plug mounted in opening E. The combustion front from the hot spot originates at the bottom of the photographs as they are mounted in the figure. The combustion area shown in rows A through D in figure 7 is similar in appearance to the combustion shown in the first few rows of figures 3 and 5. The combustion starting from the spark plug first comes into the field of view in frame E–10. In row G, the region to the rear of the combustion from the hot spot begins to clear up, indicating that the temperature in this region has again reached a uniform value and that combustion is probably completed. By the end of row H, the combustion zone from the hot spot has become narrow; that from the spark plug still extends from the combustion front to the top of the field of view.

The general appearances of the two combustion zones are, thus far, similar to those shown in figures 3 and 5. For the first part of burning, either combustion zone in figure 7 appears to extend from its source of ignition to the combustion front. Combustion then appears to become completed to the rear of the front and the combustion zone becomes much narrower. Figure 7 shows that the hot spot acted as an additional source of ignition and produced the same result that would have been obtained by mounting a second spark plug in opening F with its spark timing set several crankshaft degrees earlier than the timing for the spark plug in opening E. The photographs show that the course of combustion resulting from preignition is normal but that the timing of this secondary ignition may be damaging in the same manner as too early a spark advance.

In the second section of figure 7, the combustion fronts meet (frame I–14). An examination of row J indicates that the two fronts traveled either through each other or one above the other. This same appearance has been observed in previous photographs taken at slower speeds (reference 6). In the numerous records that have been taken with the present high-speed motion-picture camera, this apparent crossing appears with sufficient frequency that it cannot be classed as an exception.

After the combustion fronts have merged, the combustion zone decreases in size and slowly disappears. The end zone (last part of the charge to burn) is near the right center portion of the chamber. All parts of the visible portion of the combustion chamber appear to have been traversed by combustion in frame K–18. Some temperature gradients are still visible in frames P–10 to P–15, 0.0025 second later. The photographs show the characteristic period of afterburning that was shown in figure 3. This comparatively long period for the combustion to become completed after all parts of the chamber appear to have been reached by flame is characteristic of all nonknocking combustions. When knock occurs, the combustion chamber is cleared of these indications of burning within 0.000025 to 0.0001 second, that is, within 1/100 to 1/25 of the time required in the nonknocking explosion.

The effects of the clockwise air swirl on the course of the combustion are visible in figure 7. The combustion front from the hot spot is retarded along the right edge of the chamber; whereas, the front from the spark plug remains nearly horizontal.

PREIGNITION FOLLOWED BY KNOCK

Figure 8 shows combustion in which preignition was followed by knock because of the use of a fuel of lower antiknock value than in the case of figure 7. The general contours of the combustions from the hot spot and from the spark plug are very similar to those shown in figure 7. The clockwise air swirl produced by the shrouded inlet valve decreased the rate of combustion travel from the hot spot along the right side of the combustion chamber as before. The combustion starting from the hot spot is first visible in the photographs in row A and that from the spark plug in row E. The two combustion fronts meet in frame K–6. Rows L and M give less impression that one combustion front traveled over or through the other than was given in figure 7. In row L, the combustion fronts close the horizontal zone between them and the end zone is placed along the right lower section of the chamber. By frame M–17, the visible portion of this end zone is nearly filled with evidences of combustion. In row N, this unburned part of the end zone is slowly traversed by the combustion front but the zone is never completely filled. The knock is first visible in frame N–12 as indicated by the blurring of the combustion zone. The brilliant illumination accompanying knock is first visible in frame N–13.

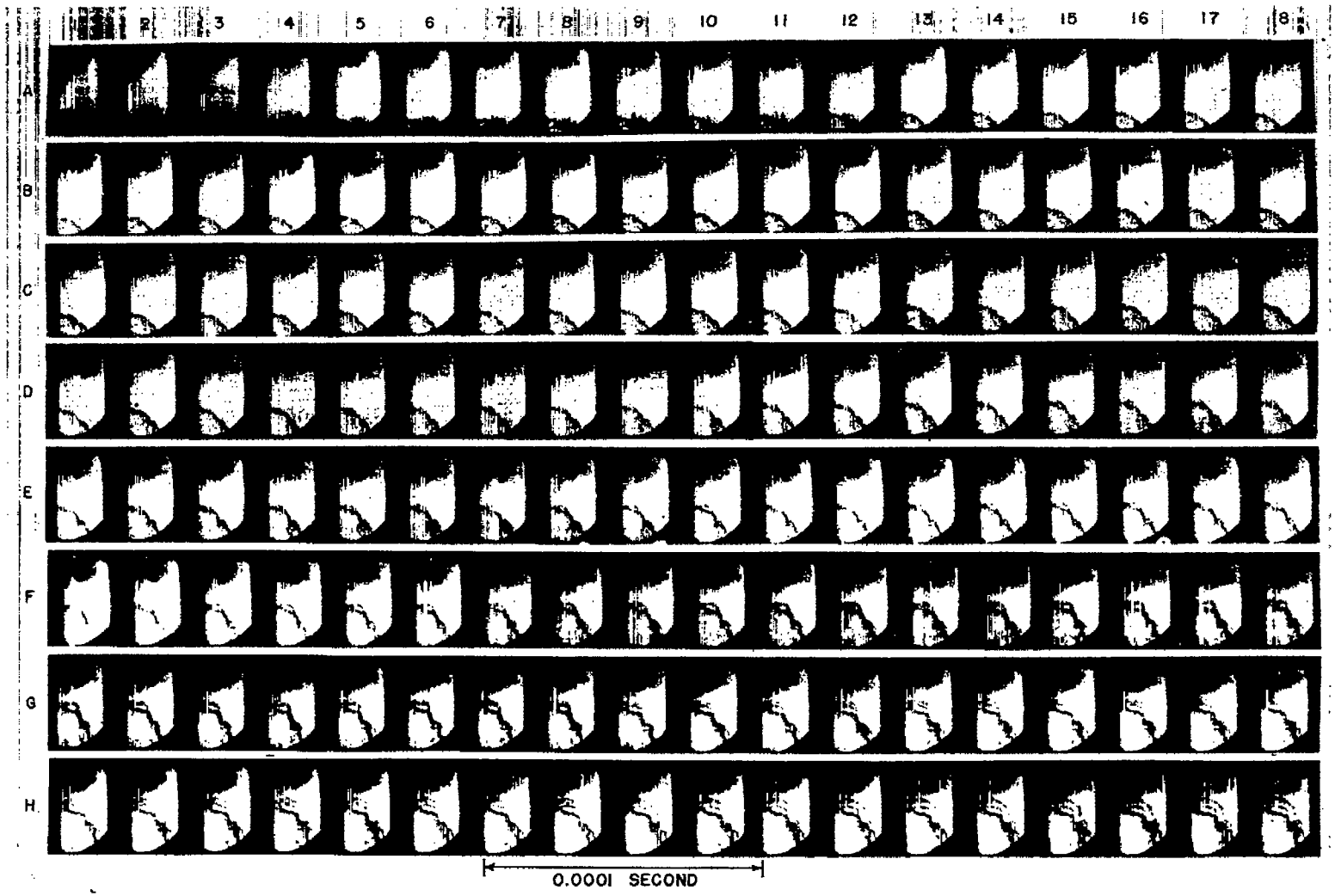
2
3
4
5
6
7
8
9
10
11
12
13
14
15
16
17
18
A
B
C
D
E
F
G
H
0.0001 SECOND

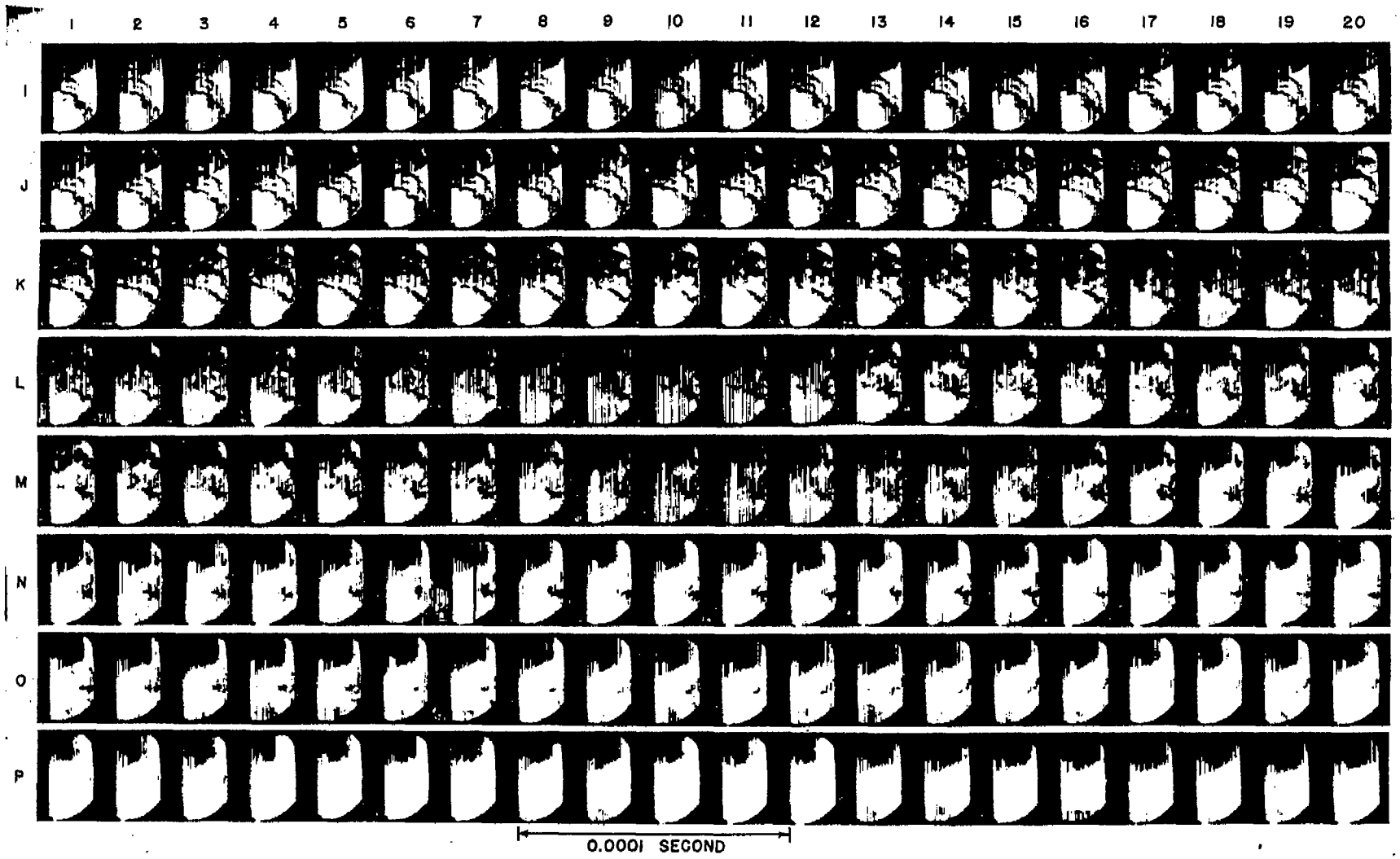

FIGURE 7.—High-speed motion pictures of preignition in a spark-ignition engine. Fuel, S-1; spark plug at top, hot spot at bottom; spark advance, 20°; knock does not occur.

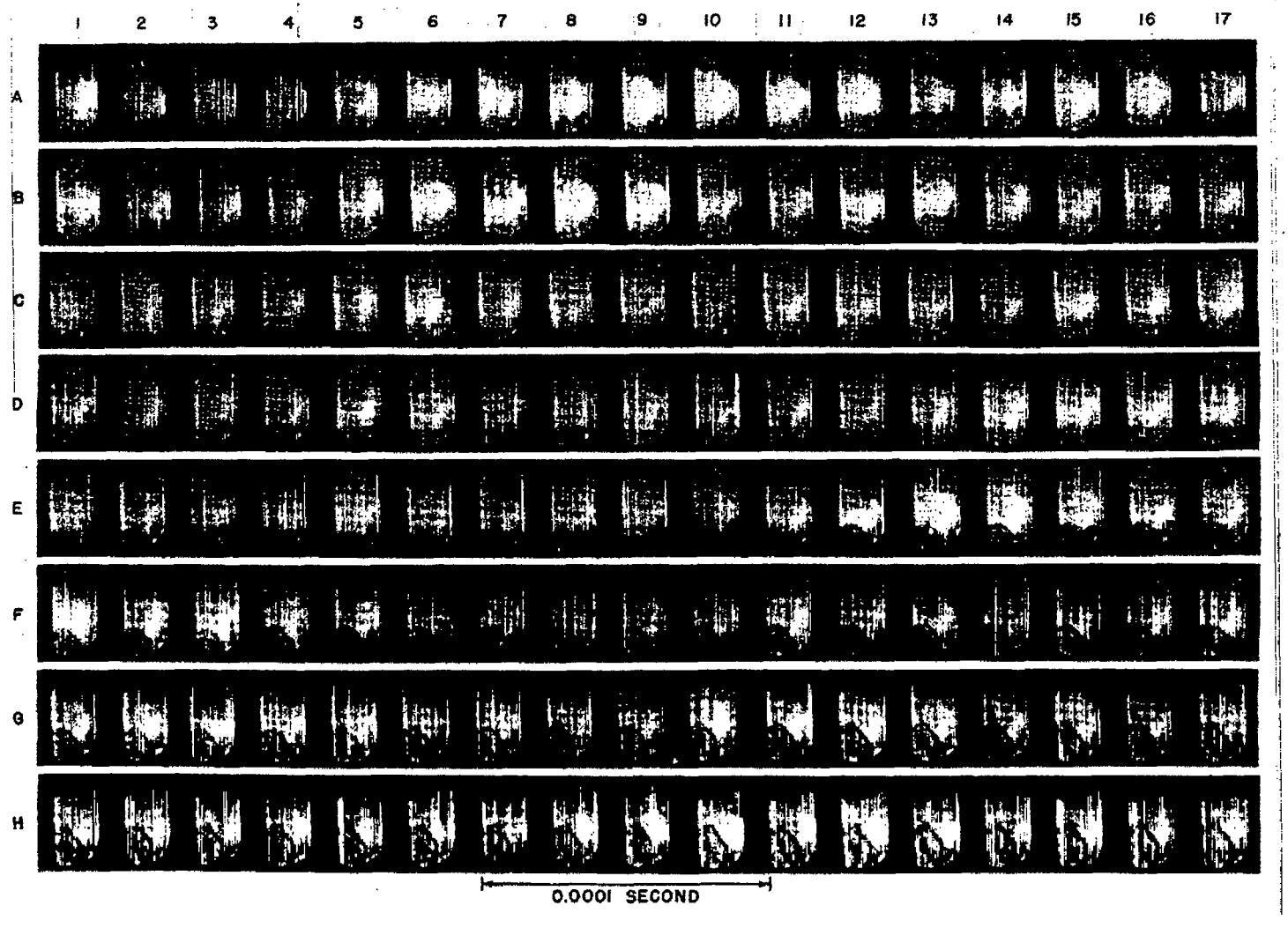
1
2
3
4
5
6
7
8
9
10
11
12
13
14
15
16
17
A
B
C
D
E
F
G
H
0.0001 SECOND

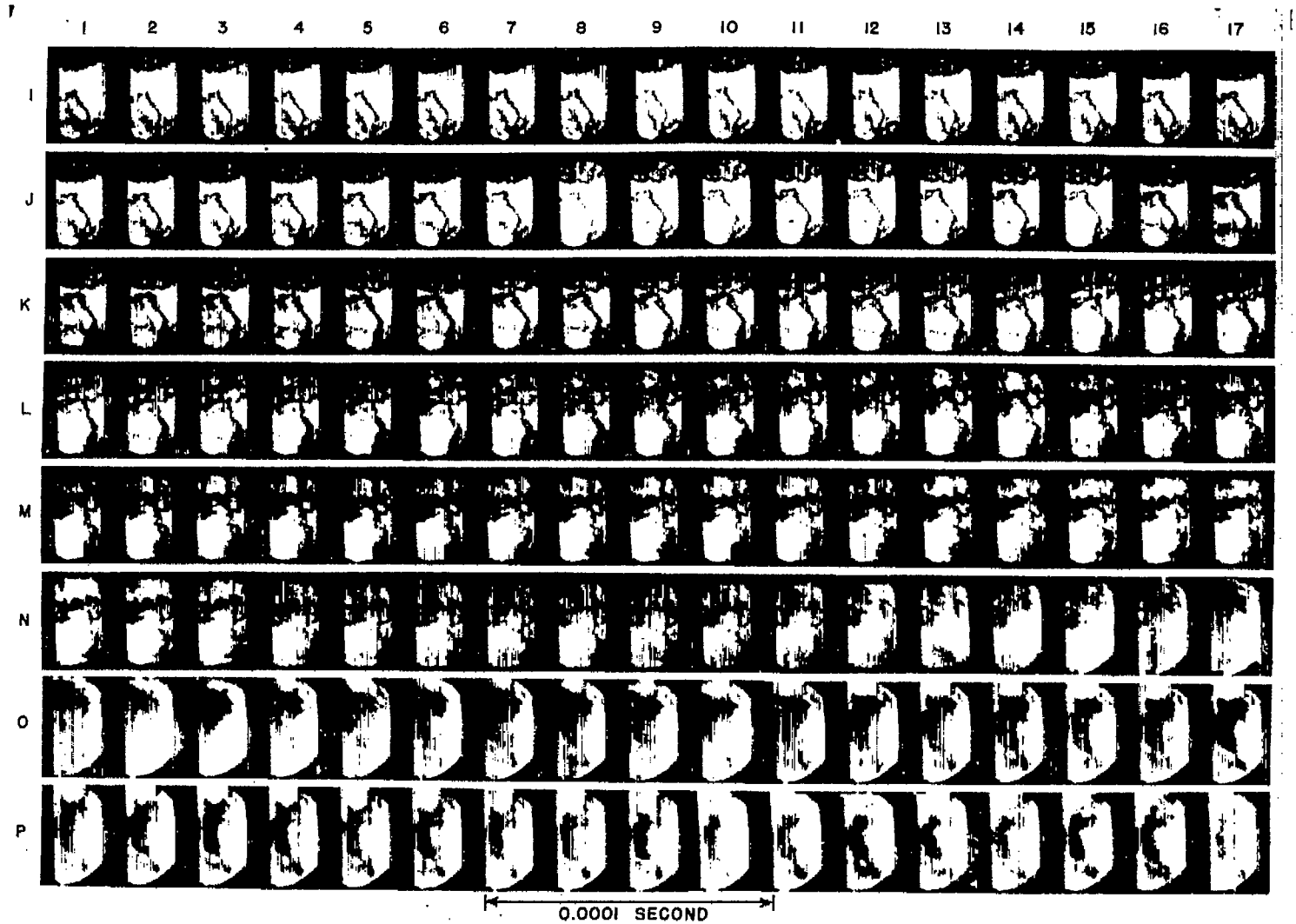

FIGURE 8.—High-speed motion pictures of preignition and knock in a spark-ignition engine. Fuel, 50 percent S-1 and 50 percent M-2; spark plug at top; hot spot at bottom; spark advance, 20°.

Figure 8 does not show the apparent auto-ignition in the end zone ahead of the combustion front. The knocking zone is apparently in the portion of the combustion chamber to the right of the visible field. Figure 2 shows that a small section of the chamber along the right-hand edge of the glass windows is not photographed. The knock explodes outward from this zone and the remaining burning portions of the gas disappear by frame N-17. As was the case in figure 5, the combustion chamber is illuminated by the extremely brilliant light of the knocking explosion.

CONCLUSIONS

Through the use of the NACA high-speed motion-picture camera operating at a speed of 40,000 frames a second, additional insight has been obtained into the mechanism of normal combustion, preignition, and knock. The photographs show that knock may be preceded by exothermic reactions in the end gas which last for as long as 0.0006 second but that the explosion in or near the end zone, which causes the high-frequency pressure waves within the chamber that give the audible sound of knock, occurs in less than 0.00005 second. The photographs give additional support to the idea that knocking combustion is based on a mechanism different from that of normal burning.

The photographs show that preignition is not in itself different from normal burning and that the effects of preignition are the same as those resulting from advancing the ignition spark except that, in the case of preignition, the source and the timing of the ignition cannot be controlled.

The high-speed motion pictures give a physical concept of the combustion process that cannot be gotten otherwise. This concept of what is happening inside the engine cylinder is probably the most important result that has thus far been obtained with this new piece of equipment.

The work covered in the present report was carried out at a single engine speed, with a single fuel-air ratio, and with the absence of any residual combustion products. The effects of altering these conditions, as well as other engine operating conditions, might be an interesting subject for future research.

In view of the extremely short time in which knock takes place, it is clear that a motion-picture camera capable of taking pictures at a much greater rate than the 40,000 frames per second already attained will be very desirable for a more intimate study of the actual occurrence of the knock itself.

LANGLEY MEMORIAL AERONAUTICAL LABORATORY,
NATIONAL ADVISORY COMMITTEE FOR AERONAUTICS,
LANGLEY FIELD, VA., *July 24, 1940.*

REFERENCES

1. Beardsley, Edward G.: The N. A. C. A. Photographic Apparatus for Studying Fuel Sprays from Oil Engine Injection Valves and Test Results from Several Researches. Rep. No. 274, NACA, 1927.
2. Tuttle, F. E.: A Non-Intermittent High-Speed 16 mm Camera. Jour. Soc. Motion Picture Eng., vol. XXI, no. 6, Dec. 1933, pp. 474–477.
3. Rothrock, A. M., and Waldron, C. D.: Some Effects of Injection Advance Angle, Engine-Jacket Temperature, and Speed on Combustion in a Compression-Ignition Engine. Rep. No. 525, NACA, 1935.
4. Rassweiler, Gerald, M., and Withrow, Lloyd: Motion Pictures of Engine Flames Correlated with Pressure Cards. SAE Jour., vol. 42, no. 5, May 1938, pp. 185–204.
5. Boyd, T. A.: Engine Flame Researches. SAE Jour., vol. 45, no. 4, Oct. 1939, pp. 421–432.
6. Rothrock, A. M., and Spencer, R. C.: A Photographic Study of Combustion and Knock in a Spark-Ignition Engine. Rep. No. 622, NACA, 1938.
7. Tozier, Robert E.: The N. A. C. A. Optical Engine Indicator. T. N. No. 634, NACA, 1938.
8. Lee, Dana W.: A Study of Air Flow in an Engine Cylinder. Rep. No. 653, NACA, 1939.
9. Rothrock, A. M., and Spencer, R. C.: The Influence of Directed Air Flow on Combustion in a Spark-Ignition Engine. Rep. No. 657, NACA, 1939.
10. Rothrock, A. M.: Fuel Rating—Its Relation to Engine Performance. SAE Jour., vol. 48, no. 2, Feb. 1941, pp. 51–65.
11. Fiock, Ernest F., Marvin, Charles F., Jr., Caldwell, Frank R., and Roeder, Carl H.: Flame Speeds and Energy Considerations for Explosions in a Spherical Bomb. Rep. No. 682, NACA, 1940.
12. Withrow, Lloyd, and Cornelius, Walter: Effectiveness of the Burning Process in Non-Knocking Engine Explosions. SAE Jour., vol. 47, no. 6, Dec. 1940, pp. 526–545.