REPORT No. 717

FLOW COEFFICIENTS OF MONOSLEEVE VALVES

By C. D. Waldron

SUMMARY

The flow coefficients of the intake and the exhaust ports of a sleeve-valve cylinder were measured by attaching the cylinder to a large tank and measuring the changes in pressure and temperature in the tank that were caused by short periods of air flow through the valve ports. The derivation of the equations on which the flow coefficients are based is given.

Intake ports receiving air radially have flow coefficients varying from 0.81 at low values to 0.95 at high values of pressure drop through the port. In the cylinder tested, intake ports receiving air tangentially have flow coefficients varying from 0.62 at low values to 0.78 at high values of pressure drop. Exhaust ports have flow coefficients varying from 0.70 at low values to 0.89 at high values of pressure drop.

The distribution of total pressure in the arms of the sleeve-valve intake manifold was measured. The arms are found to have as little as 75 percent of the total pressure within the manifold entrance.

INTRODUCTION

Sleeve valves are considered by some engine designers to have advantages over poppet valves. The monosleeve valve has proved successful in aircraft engines and is in regular production in Great Britain. In references 1 and 2, Fedden describes the Bristol sleeve-valve engines, relates some experiences with them, and compares them favorably with poppet-valve engines.

In reference 3, Hives and Smith discuss the application of sleeve valves to in-line engines and consider them not so attractive as poppet valves.

In references 4 and 5, Nutt states that good arguments exist in favor of sleeve valves but that more experience is needed to prove the claims.

In reference 6, Banks answers some of the claims made for sleeve valves. One of his answers suggests that, at high speeds, sleeve-valve ports may have poor orifice coefficients.

Sleeve-valve ports have square edges to provide quick opening and closing, leading one to expect them to have low flow coefficients. Often the flow coefficients that apply to thin-plate orifices are assumed to be correct for sleeve-valve ports.

The purpose of the present work was to measure the flow coefficients of a typical sleeve valve so that the correct coefficients for the computation of air flow or pressure drop through sleeve-valve ports will be available. The values of flow coefficients obtained with this sleeve valve should be generally applicable to most conventional sleeve valves and should remove the uncertainty about the relative breathing abilities of sleeve- and poppet-valve engines.

APPARATUS

The measurements were performed on an experimental sleeve-valve cylinder of 4.5-inch bore made under the Burt-McCollum patents.

INTAKE PORT

The cylinder was ¼ inch thick at the ports and the sleeve was 3/32 inch thick. All port edges were square.

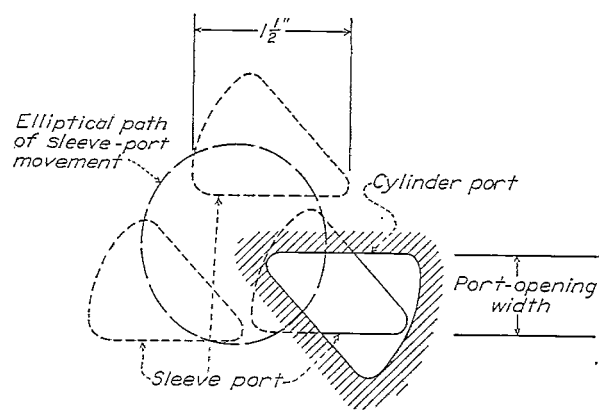

FIGURE 1.—Sleeve-valve ports and their operation.

The shape of the ports is shown and their operation is indicated in figure 1. The sleeve ports moved in an elliptical path, the ratio of the major and the minor axes being 2⅛:2. The maximum opening area of each port was 0.78 square inch. The cylinder had three intake ports arranged within about 180° of the cylinder circumference and connected by a manifold cast in the cylinder as shown in figure 2. Air entered this manifold through a 1¾-inch diameter round hole at the center port in a direction perpendicular to the cylinder axis.

When the center port was being tested, the two ends of the manifold were poured full of melted solder so that no air could go through the end ports. When the end port was being tested, the solder was removed from one end of the manifold and the center port was closed with solder. The exhaust ports were sealed with gaskets and covers.

Figure 2 shows the sliding manifold cut-off valve that was used to allow air to flow through the sleeve-valve ports for a desired number of valve cycles when the sleeve was in operation or for a desired length of time when the sleeve was stationary. This valve had a sharp-edge opening that matched the manifold entrance.

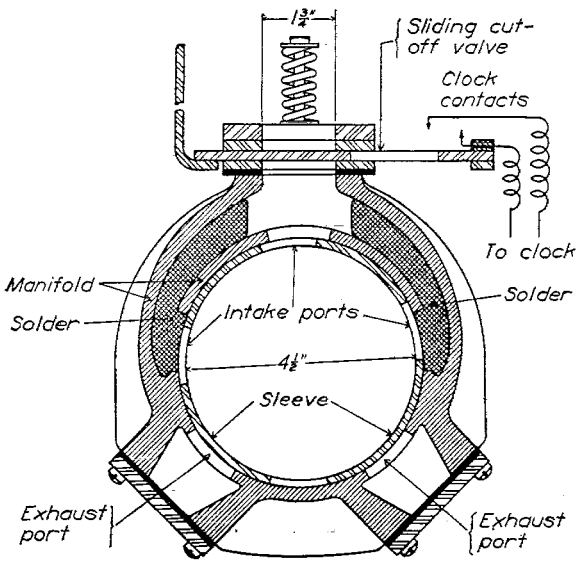

FIGURE 2.—Cross section through ports, manifold, and cut-off valve.

In addition to the port-approach conditions shown in figure 2, three other conditions were tested. Figure 3 (a) shows a rounded plasticine mouthpiece with a radius of curvature of 27/32 inch applied to the cut-off-valve entrance. Figure 3 (b) shows a 1½-inch length of tubing having a 1¾-inch inside diameter and an elliptically curved mouthpiece with 3½- and 2½-inch major and minor axes applied to the cut-off-valve entrance. Figure 3 (c) shows plasticine fairing between the cut-off valve and the cylinder port in conjunction with the mouthpiece of 27/32-inch radius.

On the sliding part of the manifold cut-off valve was an electrical contact that operated with a stationary contact to control an electric stop clock. These contacts were set to start and stop the clock during the opening and the closing, respectively, of the cut-off valve when the area of opening through the cut-off valve became equal to the sleeve-valve port opening. This clock gives values of time correct to within ±0.001 second and is described in reference 7.

During the measurement of coefficients with the sleeve in motion, the sleeve was continuously operated by the original engine sleeve-operating crank. This crank was turned by an electric motor and flywheel as shown in figure 4.

Figure 4 also shows the sleeve-operating apparatus, the sleeve valve, the cylinder, and the large tank to which the cylinder was attached. The crank end of the sleeve was sealed by a wooden plug and the sleeve, the cylinder, and the tank formed an almost airtight container. The volume of the tank was 81.9 cubic feet. The tank was evacuated by an electrically driven vacuum pump.

The NACA micromanometer recorded the pressure change in the tank correctly to within ±0.004 inch of mercury and gave the gage pressure in the tank with negligible error.

The temperature of the air in the center of the tank was measured by a 26-gage iron-constantan thermocouple. The cold junction of the thermocouple was a crushed-ice bath in a Thermos bottle. Measurements with a Beckmann differential thermometer showed the cold-junction temperature to vary only 0.023° F in 45 hours, which would be a negligible variation during each run. The potential of the thermocouple was measured with a potentiometer and a sensitive galvanometer that gave the potential correctly to within ±1.0 microvolt. This potential measurement gave the temperature change of the air in the center of the tank to within ±0.04° F.

MANIFOLD PRESSURE DISTRIBUTION

In order to determine the relation between the total pressure in the manifold entrance and the total pressure

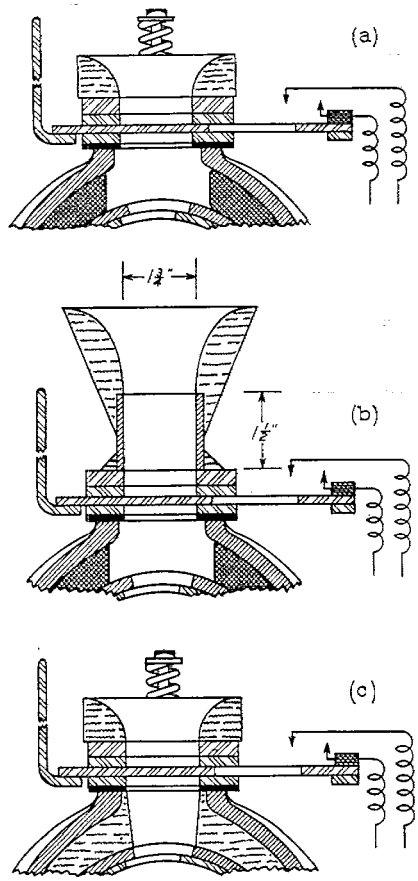

FIGURE 3.—Altered port-approach conditions.

in the manifold end passages, the sleeve-valve cylinder was mounted on a blower as sketched in figure 5. The total pressure in the manifold entrance was measured by the ⅛-inch-diameter tube A, which was bent and pointed upstream so that it measured the full impact

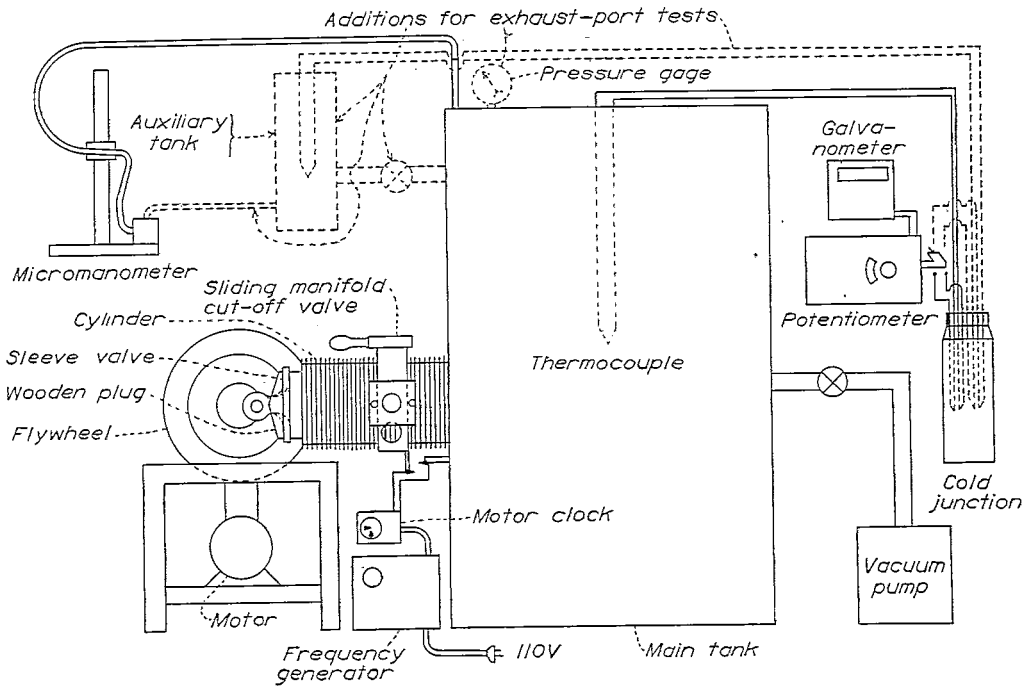

FIGURE 4.—Diagrammatic sketch of intake- and exhaust-port apparatus.

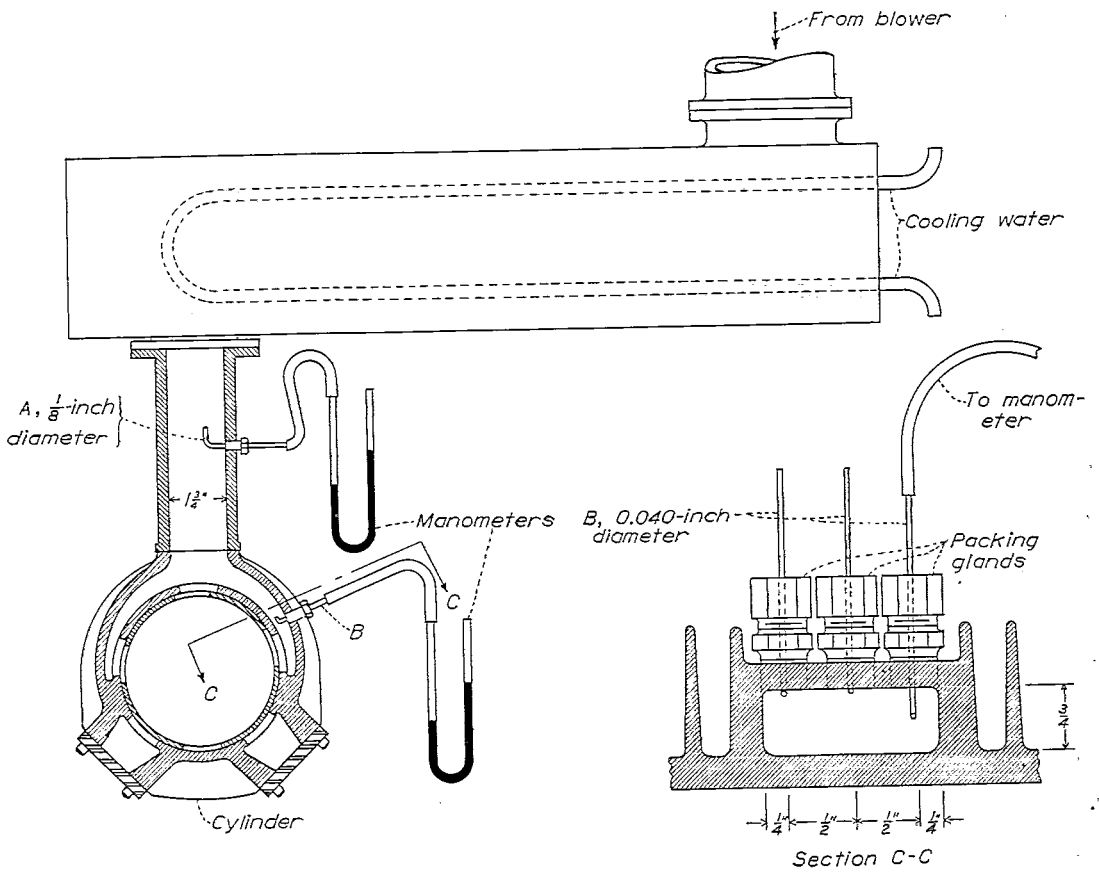

FIGURE 5.—Set-up for measuring total-pressure distribution in manifold.

pressure of the entering air. This tube could be slid in its supporting packing gland to measure the pressure at any point along one diameter of the entrance.

The pressure in the end manifold passages was measured by three total-pressure tubes B. These tubes were 0.040 inch in diameter and were mounted in the ¾- by 1½-inch passage in a plane through the cylinder axis, as shown in section C–C. Each of these tubes could be slid in its supporting packing gland to measure the pressure at different places across the

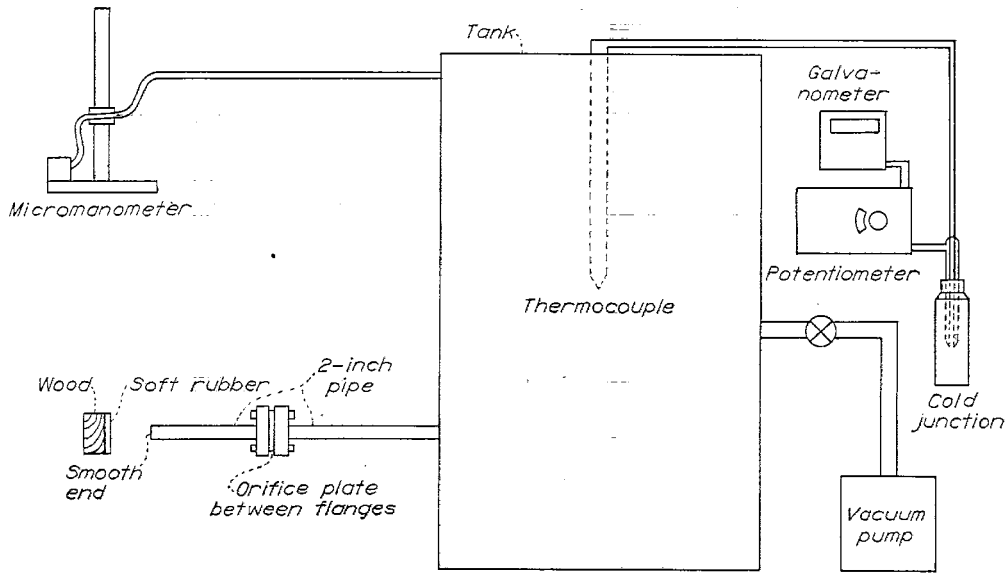

FIGURE 6.—Diagrammatic sketch of set-up for checking apparatus with a calibrated orifice.

small dimension of the manifold. Tubes were placed at the midpoint of and ¼ inch from each end of the 1½-inch dimension.

The pressures imposed on the total-pressure tubes were indicated by U-tube manometers, as sketched in figure 5. The manometer readings were estimated to 0.01 inch.

The apparatus was set up first with all three intake ports open and then with one end port open to a width of 0.3 inch.

EXHAUST PORT

Exhaust-port tests were made by putting air in the large tank under pressure and allowing air to flow in the exhaust direction through the center intake port. This procedure closely reproduced exhaust-port conditions.

For the exhaust-flow tests, the pressure in the large tank was higher than could be registered by the micromanometer. In order to measure accurately the change in this high pressure with the micromanometer, an airtight auxiliary tank was connected through a valve to the main tank as shown by broken lines in figure 4. The micromanometer was so connected that it gave the difference in pressure existing between the auxiliary tank and the main tank.

The tanks were pumped up by reversing the vacuum pump used in the intake-port tests and using it as a compressor. A Bourdon gage gave the pressure in the tanks. A thermocouple in the auxiliary tank showed the changes in the temperature of the air.

ACCURACY-CHECK APPARATUS

The apparatus for checking the accuracy of the sleeve-valve flow coefficients is sketched in figure 6. It consisted of a thin-plate orifice 0.2258 inch in diameter mounted between standard orifice-plate flanges with a 24-inch length of 2-inch pipe between the orifice and the tank and a 17-inch length of 2-inch pipe between the orifice and the atmosphere. The orifice and the flanges were made according to the A. S. M. E. specifications given in reference 8. The end of the 17-inch pipe open to the atmosphere was flat and smooth so that a wooden block with a smooth soft-rubber covering sealed the end of the pipe when the block was held against the pipe by the difference between the atmospheric pressure and the pressure in the tank.

An ordinary stop watch having 0.1-second intervals was used to time the flow through the orifice.

METHODS

SLEEVE-VALVE FLOW COEFFICIENTS

The method by which the flow-coefficient determinations were made was to force air by a known pressure difference through a known valve-opening area for a known length of time into or out of a tank of known volume. The volume of the tank and the change of the pressure and the temperature of the air in the tank were a measure of the weight of the air that flowed through the valve. From the pressure drop through the valve, the valve-opening area, the time during which air flowed through the valve, the volume of the tank, and the change in pressure and temperature in the tank, the flow coefficients were computed by one of two equations.

Flow-equation derivation.—The flow equations are based on the same assumptions as were the flow equations of Moss (reference 9). The derivation of the equations will be given to show these assumptions and to indicate the true meaning of the flow coefficients.

The equations are based on the assumption that the total energy possessed by a gas before passing through an opening plus the work done on the gas in pushing it into the opening is equal to the total energy possessed by the gas after passing through the opening plus the work done by the gas in emerging from the opening.

$$E_1+\frac{144p_1v_1}{778}+\frac{WV_1^2}{2\times 778g}=E_2+\frac{144p_2v_2}{778}+\frac{WV_2^2}{2\times 778g}$$

$$V_2^2\frac{W}{2Jg}=E_1-E_2+\frac{144p_1v_1}{J}-\frac{144p_2v_2}{J}+\frac{WV_1^2}{2Jg}$$

$$=W\int_{T_2}^{T_1}c_vdT+\frac{WRT_1}{J}-\frac{WRT_2}{J}+\frac{WV_1^2}{2Jg}$$

where

- E internal energy, Btu
- V velocity, feet per second
- W weight, pounds
- p pressure, pounds per square inch
- v volume, cubic feet
- J 778 foot-pounds per Btu
- T absolute temperature, °F
- R gas constant
- c_v constant-volume specific heat of the gas

Subscript $_1$ denotes the condition of a moving mass of gas before going through an opening and subscript $_2$ denotes the condition of the gas after going through the opening. Assume c_v constant, as it is for an ideal gas; then

$$\frac{V_2^2}{2Jg}=c_v(T_1-T_2)+\frac{R}{J}(T_1-T_2)+\frac{V_1^2}{2Jg}$$

$$=(T_1-T_2)\left(c_v+\frac{R}{J}\right)+\frac{V_1^2}{2Jg}$$

Substituting

$$c_p=c_v+\frac{R}{J}$$

$$\frac{V_2^2}{2Jg}=c_p(T_1-T_2)+\frac{V_1^2}{2Jg}$$

$$V_2=\sqrt{2Jg\left[c_p(T_1-T_2)+\frac{V_1^2}{2Jg}\right]}$$

Assume that the gas passes through the opening with a reversible adiabatic process, that is, without friction, without the generation of turbulence in the opening, and without heat transfer to or from the gas.

$$T_2=T_1\left(\frac{p_2}{p_1}\right)^{\frac{\gamma-1}{\gamma}}$$

$$V_2=\sqrt{2Jg\left\{c_pT_1\left[1-\left(\frac{p_2}{p_1}\right)^{\frac{\gamma-1}{\gamma}}\right]+\frac{V_1^2}{2Jg}\right\}}$$

$$w=AcG\rho_0\frac{T_0}{T_2}V_2\frac{p_2}{p_0}$$

where

- w rate of gas flow, pounds per second
- ρ_0 density of normal air, 0.075 pound per cubic foot
- T_0 temperature of normal air, 528° F absolute
- p_0 pressure of normal air, 14.7 pounds per square inch
- A area of opening, square feet
- c coefficient of discharge
- G specific gravity of gas at normal conditions relative to normal air
- γ ratio of specific heats of the gas

$$w=AcG\frac{T_0}{T_2}\frac{p_2}{p_0}\sqrt{2Jg\left\{c_pT_1\left[1-\left(\frac{p_2}{p_1}\right)^{\frac{\gamma-1}{\gamma}}\right]+\frac{V_1^2}{2Jg}\right\}}=\frac{AcG\rho_0T_0\sqrt{2g}}{p_0}\sqrt{\frac{p_1^2c_pJ}{T_1}\left[\left(\frac{p_2}{p_1}\right)^{\frac{2}{\gamma}}-\left(\frac{p_2}{p_1}\right)^{\frac{\gamma+1}{\gamma}}\right]+\frac{V_1^2p_1^2}{2gT_1^2}\left(\frac{p_2}{p_1}\right)^{\frac{2}{\gamma}}} \quad (1)$$

Expanding the expression under the radical in terms of $\frac{p_2}{p_1}=1-\frac{p_1-p_2}{p_1}$ and carrying the terms to the third power gives

$$w=\frac{AcG\rho_0T_0\sqrt{2g}}{p_0}\sqrt{\frac{R}{T_1}(p_1-p_2)\left\{p_2-(p_1-p_2)\left[\frac{3}{2\gamma}-1-\left(\frac{7}{6\gamma^2}-\frac{5}{6\gamma}\right)\left(\frac{p_1-p_2}{p_1}\right)\right]\right\}+\frac{V_1^2p_1^2}{2gT_1^2}\left[1-\frac{2}{\gamma}\left(\frac{p_1-p_2}{p_1}\right)+\left(\frac{2}{\gamma^2}-\frac{1}{\gamma}\right)\left(\frac{p_1-p_2}{p_1}\right)^2-\frac{2}{3\gamma}\left(\frac{2}{\gamma^2}-\frac{3}{\gamma}+1\right)\left(\frac{p_1-p_2}{p_1}\right)^3\right]}$$

Air was taken either from the room or from the large tank, when sleeve-valve coefficients were measured, and V_1 can be considered zero. Calculation shows that the term $\left(\frac{7}{6\gamma^2}-\frac{5}{6\gamma}\right)\left(\frac{p_1-p_2}{p_1}\right)$ never has an appreciable influence on the value of w below the critical pressure drop and can be neglected.

There results

$$w=\frac{AcG\rho_0T_0\sqrt{2gR}}{p_0}\sqrt{\frac{(p_1-p_2)\left[p_2-(p_1-p_2)\left(\frac{3}{2\gamma}-1\right)\right]}{T_1}}$$

For air

$$G=1$$
$$R=53.3$$
$$\gamma=1.395$$

$$w=158.17\,Ac\sqrt{\frac{(p_1-p_2)[p_2-0.0755(p_1-p_2)]}{T_1}} \qquad (2)$$

From the test data

$$w=\frac{V\Delta p}{tTR}=\frac{\Delta p\times 81.9\times 0.491\times 144}{tT_1\times 25.4\times 53.3}=\frac{4.277\Delta p}{tT_1} \qquad (3)$$

where

Δp change in pressure in tank due to air flow, millimeters of mercury

t time of air flow, seconds

Combining equations (2) and (3) gives

$$c=\frac{0.02704\Delta p}{At\sqrt{T_1(p_1-p_2)[p_1-1.0755(p_1-p_2)]}} \qquad (4)$$

This equation applies when the pressure drop through the valve is less than critical. In order to find the equation that applies when the pressure drop through the valve is greater than critical, equation (1), without the V_1 term, is differentiated with respect to p_2 and set equal to zero:

$$\frac{dw}{dp_2}=\frac{AcG\rho_0T_0p_1}{p_0}\sqrt{\frac{2gJc_p}{T_1}\left[\frac{2}{\gamma}\left(\frac{p_2}{p_1^2}\right)^{\frac{2}{\gamma}-1}\frac{p_1}{p_1^2}-\left(\frac{k+1}{k}\right)\left(\frac{p_2}{p_1}\right)^{\frac{\gamma+1}{\gamma}-1}\frac{p_1}{p_1^2}\right]}=0$$

$$p_2=\left(\frac{\gamma+1}{2}\right)^{\frac{\gamma}{1-\gamma}}p_1$$

$=0.529p_1$ for air, the critical pressure.

Substituting 0.529 p_1 for p_2 in equation (1) without the V_1^2 term gives

$$w=\frac{AcG\rho_0T_0p_1}{p_0}\sqrt{\frac{2gJc_p}{T_1}\left[\left(\frac{0.529p_1}{p_1}\right)^{\frac{2}{\gamma}}-\left(\frac{0.529p_1}{p_1}\right)^{\frac{\gamma+1}{\gamma}}\right]}$$

$c_p=0.243$ for air.

$$w=\frac{76.43\,Acp_1}{\sqrt{T_1}} \qquad (5)$$

Combining equations (3) and (5) gives

$$c=\frac{0.05600\Delta p}{Atp_1\sqrt{T_1}} \qquad (6)$$

Equation (6) applies when p_2 is less than 0.529 p_1.

Equations (4) and (6) were applicable to either intake or exhaust flow. Equation (4) alone was sufficient for all tests made with intake ports.

This derivation shows that the sleeve-valve flow coefficients are the ratio of the actual flow through the ports to the flow that would exist if the minimum area of the air stream were the same as the port area, if c_p were constant during the flow process, and if the gas flowed through the port without friction, without the generation of turbulence in the port, and without heat transfer to or from the gas.

The values of p_1 and p_2 used in the computations were the average values during each run.

Determination of Δp.—The value of Δp for intake ports was obtained by the following procedure. The tank shown in figure 4 was evacuated to a desired pressure. After the temperature of the air in the tank stabilized, carefully made readings of the initial temperature and pressure of the air in the tank were recorded as well as the time at which the readings were made. If measurements were being made with the sleeve valve in operation, the manifold cut-off valve was opened for a desired number of cycles while the sleeve was steadily operating. If measurements were being made with the sleeve stationary at a specific port opening, the manifold cut-off valve was opened for a desired length of time.

Many successive readings of the pressure and the temperature of the air in the tank were then made and recorded, together with the time of the readings. Each of the successive pressure readings was corrected to the temperature recorded before the cut-off valve was opened. The corrected readings B, C, D, E, etc. and the initial reading A were plotted against time, as in figure 7. Extending a line through these readings back to the time of the reading made before the cut-off valve was opened gave the pressure (X in fig. 7) that would have existed in the tank after air flowed through the valve port if there had been no leakage or temperature change. The difference between X and A was the value of Δp used in equation (4) for computing c.

The method of determining Δp when making exhaust-flow tests was slightly different. Both tanks shown in figure 4 were pumped up to a desired pressure with the valve between the tanks open. After the temperature of the air in the two tanks had stabilized, the valve between the two tanks was closed. The time at which it was closed was recorded, together with the temperatures of the air in the two tanks.

With the sleeve valve stationary at a specific port opening, the manifold valve was opened for a desired length of time. Many successive readings of the difference in pressure between the two tanks were made with the micromanometer and recorded with the time of each reading. The temperature of the air in each tank was recorded with each reading. Each pressure reading was corrected to the temperatures in the two tanks before the manifold valve was opened. Plotting these corrected values and extending a line through them to the time recorded before the manifold valve was opened gave Δp.

Measurement of port area.—The opening area of the center port at different sleeve positions was measured by placing a piece of thin paper on a block of wood that was forced into the sleeve port from the inside of the sleeve. The block was carefully fitted so that the piece of paper completely filled the sleeve port and pressed tightly against the port in the cylinder. With a sharp-pointed pencil the port-opening outline was traced on the piece of paper, care being taken to sight through the manifold entrance and to see that the outside of the line corresponded exactly with the edges of the port. Removing the piece of paper and tracing the outside of the line with a planimeter gave the port opening with little error.

The opening area of the end port could not be obtained in the preceding manner because the opening was invisible from outside the cylinder. The sleeve was locked in a desired position and an impression of the port opening was carefully made on a piece of plasticine inserted from inside the sleeve. A microscope with cross hairs in the eyepiece and having a table with two-directional micrometer adjustments was used to obtain the dimensions of the impression. The dimensions were plotted to a large scale and the area was found with a planimeter.

The values of area obtained for the center port were the port-opening areas in the cylindrical surface between the sleeve and the cylinder. The value of area obtained for the end port was the area in the cylindrical sleeve projected onto a plane. Inasmuch as the areas measured by the two methods differed by less than 1 percent, it made little difference which method was used.

Determination of time of flow.—For the tests with the sleeve stationary, the time of air flow was the time during which the manifold cut-off valve was open, as indicated by the stop clock.

With the sleeve in operation, the time of air flow through the port could not be directly obtained. Instead of using A and t separately, the product At was determined and used for computing c. The product At was obtained from the area of the plot of port-opening area against sleeve crank degrees by multiplying the area of the plot by the proper factor to change degrees to seconds and then multiplying by the number of cycles during which air flowed through the port. This multiplication factor was determined by accurately measuring the speed of rotation of the sleeve crank during each run. The number of cycles was visually counted.

MANIFOLD PRESSURE DISTRIBUTION

The relation between the pressure in the manifold entrance and in the manifold end passages was determined as follows. Air was blown into the manifold entrance and through one or three intake ports with the set-up sketched in figure 5; the total pressure was then measured in the entrance and in one end passage.

Total pressure in the entrance was measured with tube A at eight stations across the manifold entrance. These stations were so spaced as to be at equal increments of area of the section. Averaging the readings at the eight stations gave the average pressure across the section.

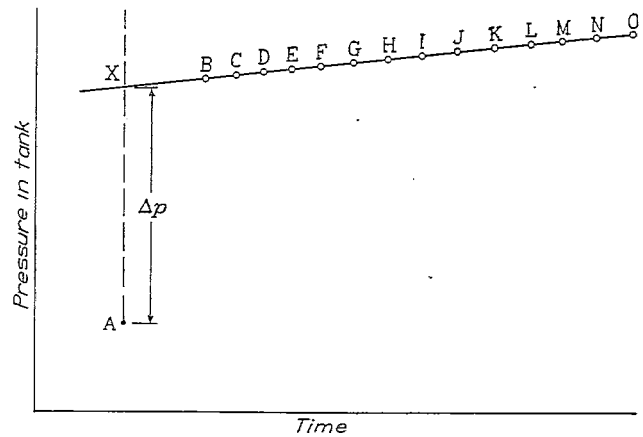

FIGURE 7.—Method of determining Δp.

In the end passage of the manifold, pressures were measured with the three B tubes at seven equally spaced stations across the passage. Averaging the readings of the B tubes gave the average pressure in the passage.

METHOD OF ACCURACY CHECK

The accuracy of the results obtained with the apparatus was checked by measuring the coefficients of a thin-plate orifice and comparing the values with A. S. M. E. values for this orifice. The apparatus in figure 6 was operated by placing the rubber-covered block on the end of the 17-inch pipe and evacuating the tank to a desired pressure. After the temperature of the air in the tank stabilized, the pressure and the temperature were recorded with the time of the readings. The wooden block was removed for about 15 seconds and replaced, the time of air flow being measured with a stop watch.

Successive readings of pressure and temperature were made and used in the same manner as for sleeve-valve tests to determine the change of pressure in the tank caused by air flowing through the orifice without temperature change or leakage effect. The weight of air flow was computed by equation (3) from the pressure

change, the temperature, and the volume of the tank. Dividing this weight by the stop-watch reading gave the rate of flow w.

Flow coefficients were computed from the following equation, which was obtained by combining equations [175] and [100 (b)] from reference 8 and is given in the symbol terminology of the original paper:

$$K=\frac{4\times 144w}{\pi D^2 Y_1\sqrt{\frac{2\times 144\times 32.17\times 2.702p_1(p_1-p_2)}{T_1}}} \quad (7)$$

where D is the diameter of the orifice in inches. Values of Y_1 were obtained from figure 73 of reference 8.

The values of the flow coefficient K were plotted against Reynolds number for comparison with experimental data and will be discussed later in connection with figure 13.

Comparing the computed values of K with the values given in reference 8 for similar conditions showed the reliability and the accuracy of the apparatus for determining the sleeve-valve coefficients.

RESULTS AND DISCUSSION

INTAKE PORTS

Center port.—Flow coefficients of the center intake port were measured with the sleeve crank both stationary and operating at 100 rpm. Reference 10 shows that poppet-valve coefficients do not vary with valve operating speed. This fact leads one to expect sleeve-valve flow coefficients not to vary with valve speed and to expect the coefficients measured at 100 rpm and with the sleeve stationary to be applicable to any speed of sleeve operation.

An idea of the effect of the inertia of the air near a valve port can be obtained from a calculation of the error in the flow-coefficient measurements that is caused by the inertia of the air in the manifold. Equation (2) states that

$$w=158.17Ac\sqrt{\frac{(p_1-p_2)[p_2-0.0755(p_1-p_2)]}{T_1}}$$

$$V_1=\frac{w}{\rho_1 A}=\frac{158.17Ac}{\rho_1 A}\sqrt{\frac{(p_1-p_2)[p_2-0.0755(p_1-p_2)]}{T_1}}$$

$$\text{Acceleration}=\frac{V_1}{t'}=\frac{F}{m}=\frac{A\times 144(p_1-p_2)\times 32.2}{Al\rho_1}$$

where

t' time required for the column of air between sleeve-valve port opening and manifold entrance to be accelerated from zero velocity to the velocity that the pressure difference p_1-p_2 will generate

F force accelerating air, pounds

m mass of column of air (W/g)

l distance between sleeve-valve port and manifold entrance, feet

$$t'=\frac{l\rho_1 V_1}{144\times 32.2(p_1-p_2)}$$

$$t'=\frac{l\rho_1\times 158.17c}{144\times 32.2(p_1-p_2)\rho_1}\sqrt{\frac{(p_1-p_2)[p_2-0.0755(p_1-p_2)]}{T_1}}$$

For the center port, l was 2 inches. The value of c to be used can be taken as 0.8.

For a pressure difference of 3 pounds per square inch between the outside and the inside of the tank, the equation is

$$t'=\frac{2\times 158.17\times 0.8}{12\times 144\times 32.2\times 3}\sqrt{\frac{3(11.7-0.0755\times 3)}{560}}$$

$$=0.00038 \text{ second}$$

The error in flow time caused by the time required for gas velocity to build up will be, for five cycles at 100 rpm of the sleeve crank,

$$\frac{0.00038}{\frac{1}{4}\times\frac{60}{100}\times 5}=0.05 \text{ percent}$$

In an engine, probably only a small amount of gas near the valve port has to be accelerated to build up full gas velocity through the valve port so that the acceleration time will be much less than 0.00038 second. The sleeve-valve coefficients measured at 100 rpm of the sleeve crank and with the sleeve stationary should therefore be applicable to any speed of sleeve-valve operation.

Although valve speed appears to have no effect on the flow coefficient of the valve port, valve speed affects pulsations in the intake manifold. The length of the flow path through the intake manifold of the testing apparatus was very short when the sleeve was in motion and the frequency of the pulsations in this length was very high. The sleeve being operated at low speeds, all standing waves in the intake should have been avoided and the values of flow coefficients obtained in the tests should be port coefficients unaffected by pulsations in the intake manifold.

The coefficients determined should therefore be directly applicable to any length of manifold when the pressure pulsations in a manifold have been investigated and the pressure effective at the valve port has been determined.

The flow coefficients of the center intake port with the sleeve in motion are plotted in figure 8. All these coefficients were computed from equation (4). Curve (a) was obtained with the port-approach conditions shown in figure 2. The values of flow coefficient increased from near 0.8 at low values of p_1-p_2 to near 0.95 at the critical value of p_1-p_2. The plotted points were scattered but the number of points was large and the curve drawn through them should be near the true values. The scatter of the points is believed to be due to the method of determining Δp by extrapolation.

Air entered the manifold through the square-edge cut-off valve, which may have caused the air stream to contract after entering the manifold. It was not known whether the sleeve-valve port was at the vena contracta of this entering air stream or whether the port was upstream or downstream from the vena contracta. None of these conditions would be the same as that of air entering the manifold from a pipe, as it does in an engine. Sleeve-port coefficients applicable to engine conditions were desired. In order to eliminate the contraction of the air stream after entering the manifold without applying a long pipe that would introduce friction and possibly pulsations, a rounded mouthpiece was applied to the cut-off valve entrance as shown in figure 3 (a). The sleeve-port coefficients measured with this mouthpiece in use are plotted as curve (b) in figure 8. The values of c were 1 to 2 percent higher than were obtained with the square-edge cut-off valve entrance.

A further attempt to secure the condition of a noncontracting and nonexpanding air stream entering the manifold without introducing appreciable pipe friction was made with the mouthpiece and the manifold shown in figure 3 (b). The values of c obtained are plotted as curve (c) in figure 8. At low values of p_1-p_2, the values of c were about the same as those of curve (b) and, at high values of p_1-p_2, they were about 2 percent above those of curve (b).

An attempt to secure as high a flow coefficient as possible for the sleeve-valve port was made with the port-approach condition shown in figure 3 (c). The rounded cut-off valve entrance was smoothly faired into the port in the cylinder. With this approach condition, one-half the circumference of the sleeve-valve port consisted of the square edge of the port in the sleeve and one-half the circumference consisted of the well-faired cylinder port. This condition was believed to give the highest flow coefficient possible with sleeve-valve ports having square port edges at the mating surfaces of the sleeve and the cylinder. The values of c obtained are plotted as curve (d) in figure 8. The values are about the same as curve (a) at low values of p_1-p_2 and about 2 percent higher at high values of p_1-p_2.

The close agreement of curves (a), (b), (c), and (d) shows that flow coefficients for sleeve-valve ports are insensitive to port-approach conditions. Curve (e), the mean of the four curves, when air approaches the port in a normal direction, gives values of c that should be applicable to any conventional sleeve-valve port having air approaching in a normal direction.

The values plotted in figure 8 are the over-all coefficients obtained with the sleeve in motion and are the summation of the values of c effective at each amount of port opening. Reference 10 shows that poppet-valve flow coefficients vary with the amount of valve opening. For the purpose of determining whether flow coefficients of sleeve-valve ports vary with the width of port opening, the intake coefficients of the center port were measured with the sleeve stationary at 0.1- and 0.2-inch widths of opening. The port-approach condition was that shown in figure 2, which was also used for curve (a) of figure 8.

During the tests with the sleeve stationary, the timing-clock contacts on the sliding manifold cut-off valve were set to start and stop the timing clock when the area of opening through the manifold cut-off valve became equal to the sleeve-valve port area. If the cut-off valve had had zero effect on the air flow, the

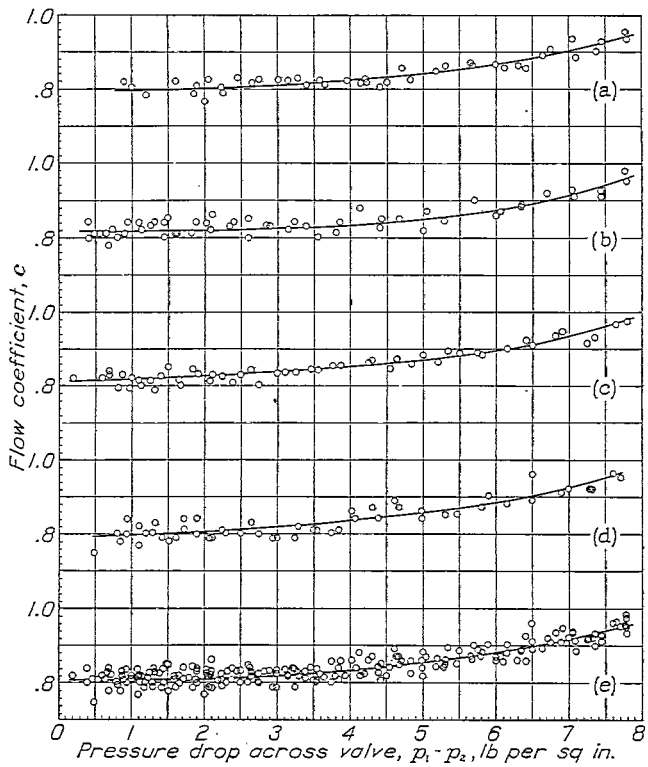

(a) No mouthpiece.
(b) 27/32-inch-radius mouthpiece.
(c) 1½-inch manifold plus elliptical mouthpiece.
(d) Faired cylinder port plus 27/32-inch-radius mouthpiece.
(e) Mean of curves (a), (b), (c), and (d).

FIGURE 8.—Coefficients of center intake port with sleeve in motion.

proper place to start and stop the clock during the opening and the closing, respectively, of the cut-off valve would have been when the cut-off-valve opening area was one-half the sleeve-valve port area. The cut-off valve had to be open somewhat more than the sleeve-valve port in order not to restrict flow through the sleeve-valve port. The proper position to start and stop the clock was somewhere between the position at which the cut-off-valve opening area was one-half that of the sleeve-valve port and the previously mentioned position at which the cut-off valve was open somewhat more than the sleeve-valve port. An approximation to this proper position was made by starting and stopping the clock when the cut-off valve opening area became equal to the sleeve-valve port area. The error

between this chosen position and the proper position should have been equal to only a small part of the time required to open the cut-off valve to this chosen position. Measurements showed that the cut-off valve could be moved from a closed position to this chosen position in 0.01 second. The error in time, therefore, was only a small part of this 0.01 second and was inappreciable in the sleeve-valve tests.

The values of c obtained with the sleeve stationary are plotted in figure 9. Both curves in figure 9 are nearly the same as curve (a) in figure 8. As curve (a) in figure 8 is an average of the coefficients for port-opening widths of 0.1 inch, 0.2 inch, and on up to the full width and is the same as the curves for the 0.1- and 0.2-inch width of opening, it can be assumed that the flow coefficients do not change with the size of the port opening. These results give no information about the amount the port-opening size can be increased beyond 0.78 square inch without influencing the flow coefficients. These results indicate, however, that sleeve-valve ports somewhat larger than the ones here tested would have the same flow coefficients as long as the manifold size is large.

End ports.—Figure 10 shows the values of c obtained when the end intake port with a 0.3-inch width of port opening was tested. The tests were made with the sleeve stationary. The values of c ranged from 0.62 at low values of p_1-p_2 to 0.77 at high values of p_1-p_2. These values are much lower than the ones obtained for the center intake port.

Air from the manifold approached the end port in an almost tangential direction. Part of the decrease in the coefficients was caused by the fact that the air struck the port at an angle so that only an angular projection of the actual port-opening area was effective. When the apparatus shown in figure 5 was set up for continuous air flow through only one end port, a manual

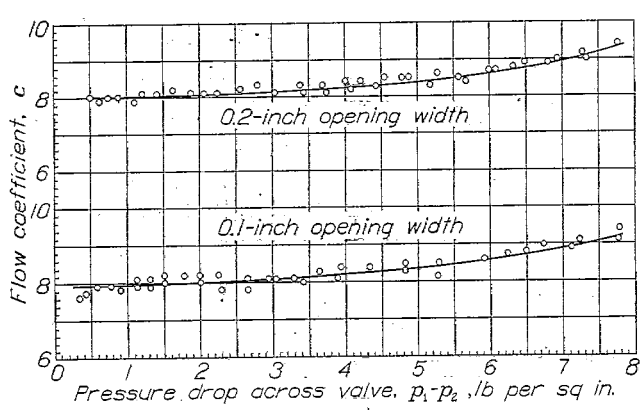

FIGURE 9.—Coefficients of center intake port with sleeve stationary.

inspection of the air stream coming through the port showed the air stream to be not radial to the cylinder axis but to be more nearly tangential to the cylinder bore.

The flow coefficients were lowered because some of the air had to change direction between the manifold entrance and the manifold end passage. Measurements of total pressure in the manifold entrance and in the end passage when the apparatus shown in figure 5 was set up for continuous flow through only one end port showed a drop in total pressure of about 4 percent

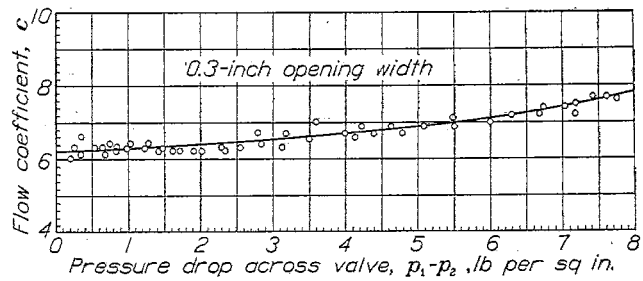

FIGURE 10.—Coefficients of end intake port with sleeve stationary.

between the manifold entrance and the end passage. Because accurate total-pressure measurements of a turbulent air stream in a curved passage are difficult to make, the only way in which this 4 percent could be of value is as a rough approximation to indicate that a small drop in pressure probably occurred between the manifold entrance and the end passage during the measurement of the coefficients of the end port. Further reason for thinking that the drop was small was the fact that the manifold cut-off valve was rather thin and had an opening area twice as large as the passage area and five times as large as the end-port-opening area tested.

The amount the coefficient was lowered by the friction of the air against the manifold can be computed from the following equation, which was taken from reference 11:

$$p_1'=\frac{\lambda\rho_1 l_1 V_1^2}{144 d_1 g}$$

where

p_1' pressure drop in manifold caused by friction, pounds per square inch

$$\lambda=\frac{0.1582}{\sqrt{\frac{\rho_1 V_1 d_1}{\mu_1}}}$$

ρ_1 density of air in manifold, pounds per cubic foot

V_1 velocity of air in manifold, $\left(\frac{w_1}{A_1\rho_1}\right)$ feet per second

d_1 hydraulic diameter of manifold passage down $(4A_1/C_1)$, feet

A_1 area of manifold section perpendicular to flow, 0.0078 square foot

C_1 circumference of manifold section perpendicular to flow, 0.375 foot

μ_1 absolute viscosity of air in manifold, pounds per second per foot

l_1 length of flow path in manifold, 0.33 foot

From equation (2),

$$w_1=158.17Ac\sqrt{\frac{(p_1-p_2)[p_1-1.0755(p_1-p_2)]}{T_1}}$$

From figure 10, $c = 0.69$ at $p_1 - p_2 = 5$ pounds per square inch. The port opening was 0.491 square inch.

$$V_1 = \frac{158.17 \times 0.491 \times 0.69}{144 \times 0.0078 \times 0.075} \sqrt{\frac{5[14.7 - (1.0755 \times 5)]}{540}}$$

$$= 186 \text{ feet per second}$$

$$p_1' = \frac{0.1582 \times 0.075 \times 4 \times 12 \times (186)^2}{144 \sqrt{\frac{0.075 \times 186 \times 1}{12 \times 1.23 \times 10^{-5}}} \times 12 \times 1 \times 32.2}$$

$$= 0.0203 \text{ pound per square inch}$$

The percentage drop caused by friction in the manifold for the condition chosen is

$$\frac{0.0203}{5.0} = 0.004 = 0.4 \text{ percent}$$

This result is approximate but shows that the friction loss should have been small.

Friction and the change in direction at the manifold entrance, therefore, probably had only a small effect on the flow coefficients measured and, for practical purposes, the coefficients in figure 10 can be used as the coefficients of sleeve-valve ports when air is delivered tangentially to the ports by small manifolds. Large manifolds probably would give larger coefficients.

Relative charging abilities of center and end ports.—When air flows simultaneously through all three intake ports in an intake system similar to the one tested, the total pressure effective in forcing air through the center port is the sum of the velocity head and the static head of the air entering the manifold. Only part of the velocity head of the entering air is transmitted around the corner and is effective on the end ports. This loss of pressure means that the end ports are less effective than a comparison of the flow coefficients of the center port and the end ports indicates

When the ports are open a small amount, the velocity head of the air entering the manifold is low and the end and the center ports will deliver amounts of air almost proportional to their flow coefficients. As the ports open, the relative effectiveness of the end ports decreases.

Figure 11 shows the total pressure existing in the manifold end passages when both the center and the end ports were wide open and when they were open to a width of 0.1 inch. When the ports were open 0.1 inch, the pressure in the end passages was almost the same as that entering the manifold. When the ports were wide open, the total pressure in the end passages was approximately three-fourths the total pressure in the manifold entrance. This total pressure is less than the static pressure at the manifold entrance. Again it is pointed out that, although the points fall on the curves, the results cannot be considered to be more than approximately correct because of the limited number of readings in the pressure survey of the manifold passages and because of the turbulent nature of the flow.

This survey shows that, when the ports are wide open, the effectiveness of the end ports is only about three-fourths as great as the flow coefficients indicate. It follows that the relative effectiveness of each end port and the center port is $\frac{\sqrt{0.75} \times 0.63}{0.80} = \frac{0.545}{0.80} = 68$ percent at low values of pressure drop and $\frac{\sqrt{0.75} \times 0.77}{0.97} = \frac{0.67}{0.97} = 69$ percent at high values of pressure drop through the valve when the ports are wide open. The relative effectiveness of each end port and the center port, when open to a width of 0.1 inch, is $\frac{0.63}{0.80} = 79$ percent and $\frac{0.77}{0.97} = 79$ percent, respectively, at low and high values of pressure drop.

Sleeve-valve cylinders could be made with all ports receiving air radially, which would make the end ports as effective as the center port.

The combined maximum opening area of the three inlet ports of the 4½-inch-bore sleeve-valve cylinder was $3 \times 0.78 = 2.34$ square inches. Sleeve-valve ports can be designed with flow areas more than twice this value.

The sleeve-valve intake ports of the cylinder tested opened 9° after top center and closed 40° after bottom center. Poppet valves often open 15° before top center and close 44° after bottom center. Increasing the opening period of the sleeve valve would increase the angle between the straight edges of the sleeve ports sketched in figure 1, which would increase the port area.

The major and the minor axes of the sleeve-port path of motion were nearly equal in the sleeve-valve cylinder tested. The minor axis could not be appreciably increased without destroying the seal of the valve. The major axis, however, could be increased without changing the minor axis by increasing the throw of the sleeve-operating crank and moving the sleeve-actuating lug to a greater distance from the cylinder axis. This change would increase the angle between the straight edges of the sleeve ports sketched in figure 1 and would also increase the height of the ports, increasing the port area.

EXHAUST-PORT COEFFICIENTS

Figure 12 shows the flow coefficients obtained with air flowing through the center intake port in the exhaust direction; the cut-off valve condition sketched in figure 2 was used. This process closely reproduced the exhaust-port conditions and eliminated much of the work required to change the apparatus from intake-port testing to exhaust-port testing.

Equations (4) and (6) were used to compute the coefficients. The port was discharging against atmospheric pressure so that equation (4) applied up to the critical pressure of about 27.7 pounds per square inch. Equation (6) applied when p_1 was greater than 27.7 pounds per square inch.

Coefficients for port openings 0.1 and 0.3 inch wide were about the same for pressure drops through the port from 50 to 10 pounds per square inch. Below 10 pounds per square inch, the coefficients obtained with the port opening of 0.3 inch were below those obtained with the opening of 0.1 inch. A large number of scattered experimental points, however, existed for the 0.1-inch opening and a smaller number of points, not scattered, existed for the 0.3-inch opening. The points for the 0.3-inch opening fell largely within the range of scatter of the 0.1-inch points and it is believed that, below 10 pounds per square inch, a greater number of points for the 0.3-inch opening would have been more widely scattered and the curves of flow coefficients for both the 0.1- and the 0.3-inch openings would have been almost the same.

The fact that the flow coefficients for the 0.1- and the 0.3-inch openings are almost the same through a large range of drop in pressure through the port indicates that exhaust-port coefficients do not change with port-opening width.

The coefficients varied from about 0.70 at low values of pressure drop across the valve to about 0.89 at high values. These coefficients were determined using air at room temperature. The temperature of engine-exhaust gases is far higher than room temperature. If adiabatic flow is assumed and c_v is considered constant, these coefficients might also apply at exhaust-gas temperatures.

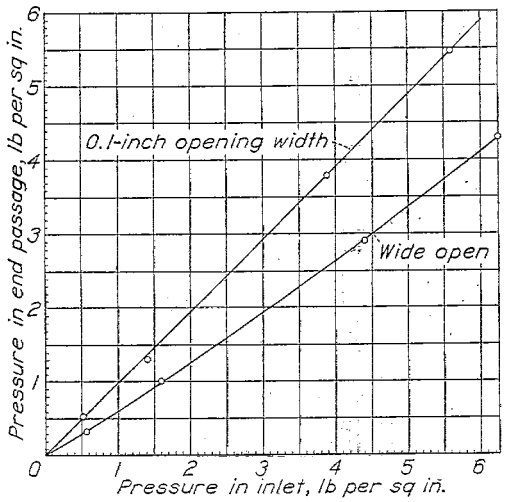

FIGURE 11.—Total pressure in manifold inlet and in end passage with all ports open.

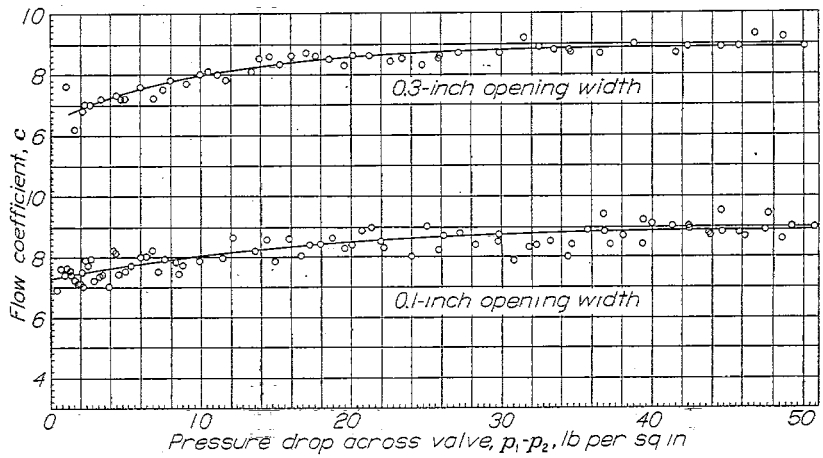

FIGURE 12.—Coefficients of exhaust ports.

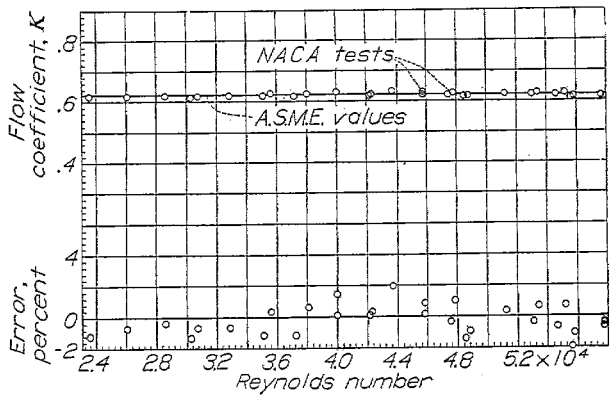

FIGURE 13.—Check test made with standard A. S. M. E. thin-plate orifice.

ACCURACY OF FINAL RESULTS

The measured coefficients of the thin-plate orifice and the carefully determined A. S. M. E. values given in reference 8 are plotted in figure 13. The range of pressure drop through the orifice extended from low values to near the critical value, which was the same range used in measuring intake coefficients of sleeve valves. Figure 13 shows that the NACA results agreed with the A. S. M. E. results within ± 2 percent. This agreement shows that the NACA sleeve-valve flow coefficients should be sufficiently accurate and reliable for design purposes.

Because sleeve-valve ports resemble thin-plate orifices, their flow coefficients would be expected to be near the coefficients of thin-plate orifices. The sleeve-valve coefficients measured are much higher than A. S. M. E. values of thin-plate-orifice coefficients. This discrepancy is partly due to the fact that the A. S. M. E. flow coefficients K are based on equation (7), which is a hydraulic equation with the insertion of the Y_1 term to take care of the expansion of the gas. The factor Y_1 was empirically determined from test data, as explained on page 65 of reference 8. Values of Y_1, to be used with the A. S. M. E. orifice flow coefficients are given in figure 73 of reference 8 and are slightly larger than the results obtained from the expression for the effect of adiabatic expansion as given by equation (88) of ref-

erence 8. The values of flow coefficient determined from an equation involving Y_1 will then be slightly lower than flow coefficients determined from an equation involving an expression for adiabatic expansion.

Using an adiabatic expression instead of equation (7) for computing the values in figure 13 would make $K=0.623$ instead of 0.615 for a Reynolds number of 23,600 and would make $K=0.785$ instead of 0.617 for a Reynolds number of 57,600. The A. S. M. E. orifice coefficients would then be nearer the NACA sleeve-valve coefficients.

Equation (88) of reference 8 gives the same results for flow coefficients as equations (2) and (4) of the present paper. Equations (2) and (4) were used for the sleeve-valve coefficients because they eliminate the necessity of determining Y_1 for sleeve valves. The sleeve-valve coefficients are believed to be generally and conveniently applicable.

CONCLUSIONS

Inasmuch as sleeve-valve ports receiving air radially were tested and found to be insensitive to port-opening width and port-approach conditions, the following conclusions are believed to be generally applicable to sleeve valves.

1. Sleeve-valve inlet ports located in the direction of manifold air flow have flow coefficients varying from 0.81 at low values to 0.95 at high values of pressure drop through the port.
2. Sleeve-valve inlet ports located 90° to the direction of manifold air flow have flow coefficients varying from 0.62 at low values to 0.78 at high values of pressure drop through the port, when receiving air from a small manifold.
3. Sleeve-valve exhaust ports have flow coefficients varying from about 0.70 at low values to 0.89 at high values of pressure drop through the port.
4. Sleeve-valve flow coefficients for inlet ports receiving air radially and for exhaust ports do not vary with the amount of port opening.
5. Sleeve-valve ports located at the ends of a forked inlet manifold similar to the one tested receive as little as 75 percent of the total pressure at ports located in front of the manifold inlet.

Langley Memorial Aeronautical Laboratory,
National Advisory Committee for Aeronautics,
Langley Field, Va., *February 8, 1940.*

REFERENCES

1. Anon.: Mr. Fedden on Sleeve Valves. The Aeroplane, vol. LVI, no. 1447, Feb. 15, 1939, pp. 207–213.
2. Fedden, A. H. R.: The Single Sleeve as a Valve Mechanism for the Aircraft Engine. SAE Jour., vol. 43, no. 3, Sept. 1938, pp. 349–365.
3. Hives, E. W., and Smith, F. L.: High Output Aircraft Engines. SAE Jour., vol. 46, no. 3, March 1940, pp. 106–117.
4. Nutt, Arthur: European Aviation Engines. SAE Jour., vol. 41, no. 1, July 1937, pp. 13–18.
5. Nutt, Arthur: Aircraft Engines and Their Lubrication. SAE Jour., vol. 45, no. 6, Dec. 1939, pp. 501–512.
6. Banks, F. R.: Aviation Fuels and Engines. SAE Jour., vol. 45, no. 3, Sept. 1939, pp. 389–406.
7. Fetter, C. H., and Stoller, H. M.: Precision Timing of Sporting Events. Elec. Eng., vol. 52, no. 6, June 1933, pp. 386–391.
8. Anon.: Fluid Meters. Their Theory and Application. Pt. 1, 4th ed., A. S. M. E., 1937.
9. Moss, Sanford A.: Measurement of Flow of Air and Gas with Nozzles. A. S. M. E. Trans., APM-3, vol. 50, no. 1, Jan.–April 1928, pp. 1–15.
10. Waldron, C. D.: Intermittent-Flow Coefficients of a Poppet Valve. T. N. No. 701, NACA, 1939.
11. Prandtl, L., and Tietjens, O. G.: Applied Hydro- and Aeromechanics. McGraw-Hill Book Co., Inc., 1934, p. 42.