NACA
CLASSIFICATION CANCELLED

RESTRICTED

TECHNICAL NOTES

NATIONAL ADVISORY COMMITTEE FOR AERONAUTICS

LIBRARY COPY
APR 23 1993
LANGLEY RESEARCH CENTER
LIBRARY NASA
HAMPTON, VIRGINIA

No. 877

AN EXPLORATION OF THE LONGITUDINAL TENSILE AND COMPRESSIVE PROPERTIES THROUGHOUT AN EXTRUDED SHAPE OF 24S-T ALUMINUM ALLOY

By D. A. Paul
Aluminum Company of America

CLASSIFIED DOCUMENT

This document contains classified information affecting the National Defense of the United States within the meaning of the Espionage Act, USC 50:31 and 32. Its transmission or the revelation of its contents in any manner to an unauthorized person is prohibited by law. Information so classified may be imparted only to persons in the military and naval Services of the United States, appropriate civilian officers and employees of the Federal Government who have a legitimate interest therein, and to United States citizens of known loyalty and discretion who of necessity must be informed thereof.

Washington
December 1942

NASA Technical Library
3 1176 01433 7969

NATIONAL ADVISORY COMMITTEE FOR AERONAUTICS

TECHNICAL NOTE NO. 877

AN EXPLORATION OF THE LONGITUDINAL TENSILE AND COMPRESSIVE PROPERTIES THROUGHOUT AN EXTRUDED SHAPE OF 24S-T ALUMINUM ALLOY

By D. A. Paul

SUMMARY

Tensile and compressive properties were investigated of specimens cut from an extruded shape of 24S-T aluminum alloy. The tensile strengths, tensile yield strengths, elongations, and compressive yield strengths of both the unrecrystallized and the recrystallized portions were determined. The strength of a cross section of an extruded shape is the weighted average of the strengths of the unrecrystallized and the recrystallized areas. The strength of an extruded shape varies along the length of the extrusion.

INTRODUCTION

The thicker extruded shapes of 24S-T aluminum alloy are usually composed of an inner unrecrystallized portion in which there is a high degree of preferred orientation and an outer portion in which coarse grains have formed as a result of the greater equivalent cold work during extrusion and recrystallization during solution heat treatment. At the present time there is no practical method for producing shapes that consist either entirely of recrystallized or entirely of unrecrystallized metal. The proportions of these areas vary along the length of such an extrusion: the recrystallized area is larger at the back end than along the remainder of the length. Because of the high degree of preferred orientation in the unrecrystallized part, this part exhibits higher longitudinal strength than the recrystallized part. The over-all strength of an extruded shape is, therefore, governed to some extent by the proportional amounts of each kind of structure of which the cross section is composed. Since the proportions vary along the length, the over-all

strength of the cross section also varies along the length: this over-all strength is greatest at the front end and least at the back end of the extrusion.

Although some data are available on the variations in properties throughout extruded shapes, there is little evidence as to how these properties vary along the length of the extruded shape or how the over-all strength of a shape is affected by the different areas and properties of the recrystallized and unrecrystallized portions. In order to obtain some specific data on this question, the plant selected an extruded shape in which the recrystallized and unrecrystallized portions were sufficiently extensive to permit test specimens to be cut entirely from each different portion. The properties of this extrusion were determined at a number of different sections.

The object of this investigation was to determine the tensile and compressive properties at various locations in a 24S-T extruded shape. In addition to tests of specimens representing localized areas in the shape, for comparison tensile tests were made of specimens representing practically the full cross section of the shape.

SPECIMENS AND TESTS

In order to obtain recrystallized areas large enough for the investigation, an extrusion having larger than normal recrystallized areas was selected. The piece selected was a 36-foot length of a medium-size 24S-T shape (die K-27043). The cross section of this shape is shown in figure 1. The cross section consisted of a main rectangular portion approximately 1 inch by $2\frac{3}{16}$ inches with three fins, or extensions, the thinnest of which was $\frac{5}{32}$ inch thick and projected approximately $1\frac{1}{8}$ inches from the main portion. The entire section could be inscribed in a circle of $4\frac{1}{4}$-inch diameter. This piece had a recrystallized coarse-grain portion comprising about 85 percent of the cross-sectional area 2 feet from the back end and about 50 percent of the cross-sectional area 5 feet from the back end.

Transverse sections were first cut from different locations in the extrusion. These sections were etched and photographed. The etched sections were used as a guide for choosing the locations for cutting the specimens in the cases where they were to be composed entirely of either the

unrecrystallized or the recrystallized structure. The test specimens were, in all cases, cut longitudinally from the extrusion adjacent to an etched section.

The locations at which the sections for etching and the test specimens were cut from the extrusion are shown in figure 2. Round threaded-end tensile specimens with a reduced section $\frac{3}{8}$ inch in diameter were cut from the extrusion at locations 3R6, 3R, and 7R. These locations were, respectively, approximately 4 feet from the front end, $5\frac{1}{2}$ feet from the back end, and $2\frac{1}{2}$ feet from the back end. As indicated by the sketch, two specimens were taken at each of these three locations, one from the central portion and the other from the outer portion of the heavy part of the extrusion.

One round specimen with a reduced section $\frac{1}{2}$ inch in diameter was cut from the extrusion at location 7R and was tested by the plant laboratory.

In addition to the round specimens two rectangular plate-type tensile specimens, representing practically the full cross-sectional area of the heavy portion of the extrusion, were tested. These specimens were 2 feet long and had a reduced section approximately $\frac{7}{8}$ by 2 by 8 inches. One of these specimens was taken from location 1R approximately $2\frac{1}{2}$ feet from the front end; the other was taken from location 5R approximately 4 feet from the back end.

Tensile strength, yield strength, elongation, and reduction of area of the round specimens were determined. They were tested in one of the 20,000-pound-capacity Amsler machines. A Templin electrical extensometer was used for determination of yield strength.

Tensile strength, yield strength, and elongation of the plate-type specimens were determined. They were tested in the 300,000-pound-capacity Amsler machine. Strains were measured with Huggenberger tensometers and the yield strengths were determined from stress-strain curves.

Compressive-yield-strength values were determined on two specimens cut longitudinally from the extrusion at location 9R. These specimens were $\frac{1}{8}$ by $\frac{5}{8}$ by $2\frac{5}{8}$ inches and were tested with the Montgomery-Templin apparatus designed for single-thickness compressive tests of thin flat sheet. Specimen 9RC was cut from the central unrecrystallized portion and specimen 9RO from the outer recrystallized portion.

Stress-strain tests were made of these specimens by use of Huggenberger tensometers and an Amsler 20,000-pound-capacity testing machine.

RESULTS AND DISCUSSION

Photographs of the etched transverse sections of the extrusion are shown in figure 1. These photographs illustrate how the relative amounts of the recrystallized and unrecrystallized areas vary along the length of the extrusion. At section 8R, approximately 2 feet from the back end, the unrecrystallized portion is only about 15 percent of the whole cross-sectional area of the shape. At section 3R1, approximately 5½ feet from the back end, the unrecrystallized portion is about 50 percent of the whole cross-sectional area. At section 2R, approximately 3½ feet from the front end, the entire cross section except for a coarse-grain outer skin is unrecrystallized.

Table I is a summary of the test results. Stress-strain curves are given in figure 3 for the plate-type tensile specimens 1R and 5R and in figure 4 for the compressive specimens 9RC and 9RO.

Several of the tensile specimens were cut from the unrecrystallized structure. These specimens had an average tensile strength of about 80,000 pounds per square inch and tensile yield strengths of 58,000 to 66,000 pounds per square inch. The tensile strength of the unrecrystallized portion did not appear to vary along the length of the extrusion, but the lowest yield-strength values were obtained at the front end and the highest at the back end. The elongation of the unrecrystallized portion, measured over a gage length equal to four times the diameter of the specimen, was about 14.5 percent.

Specimen 7RO was the only specimen tested in tension that was entirely of the coarse-grain recrystallized structure. The tensile strength, the tensile yield strength, and the elongation of this portion, as indicated by the results obtained from this specimen, were about 64,000 pounds per square inch, 49,000 pounds per square inch, and 17 percent, respectively.

The compressive yield strengths of the unrecrystallized and recrystallized areas at location 9R were 56,000 and

42,200 pounds per square inch, respectively. This difference is about the same as that noted in the tensile yield strengths, but the actual yield strengths in compression are somewhat less than those in tension. The differences in tensile and compressive yield strengths are caused by the fabrication process used in straightening the section.

Specimens 3RO and 5R were composed partly of the unrecrystallized and partly of the recrystallized structures, and their tensile strengths and yield strengths were between those obtained from specimens made up entirely of either structure. Specimen 7R, composed of both structures and tested at the plant laboratory, also gave values of tensile strength and of yield strength between those of the unrecrystallized and recrystallized areas.

When the tensile properties of the uncrystallized and the recrystallized portions and the percentage composition of a section are known, the tensile strength and the yield strength of the shape as a whole can be computed with a fair degree of accuracy. For example, at the center of specimen 5R, about 56 percent of the cross section of the reduced portion was recrystallized and about 44 percent was unrecrystallized. From the properties of specimens 7RO and 7RC, which were, respectively, composed entirely of the recrystallized and unrecrystallized structures, the following values of tensile strength and yield strength may be calculated for specimen 5R:

Tensile strength (lb/sq in.)		Yield strength (lb/sq in.)	
Calculated			
56 percent of 63,880 =	35,800	56 percent of 49,400 =	27,700
44 percent of 81,200 =	35,700	44 percent of 66,100 =	29,100
	71,500		56,800
Actual			
	69,750		56,000

This procedure can probably be used for any 24S-T extrusion having an internal structure similar to that of the shape tested in this investigation. The foregoing calculations show that, under direct stress, the strength of the full section is not governed by the weaker portion but is the weighted average of the strengths of the recrystallized and the unrecrystallized areas.

Based on the use of weighted averages, the over-all tensile and yield strengths of the extruded shapes have been calculated at five different sections along the length. In obtaining these tensile strengths, the entire cross-sectional area of the extruded shape, including the three projecting webs, was considered. The resulting values are given in table II. These data show that the over-all tensile and tensile yield strengths of the extruded shape at the back end are 83 and 89 percent, respectively, of the corresponding values at the front end. The data further show that both the tensile and the tensile yield strengths increase rather rapidly with the distance from the back end, and it appears probable that the weakening effect of the recrystallized portion disappears within the first 6 to 10 feet at the back end. While the data in table II are not extensive enough to define the complete variation in strength along the length of the shape, it seems clear that this variation is not linear along the length but that the strength is greater throughout most of the length than would be indicated by linear interpolation between the strengths of the two ends.

CONCLUSIONS

From the results obtained in this investigation, the following conclusions may be drawn regarding the effect of the variation of the structure in the given 24S-T extrusion upon the tensile properties and compressive yield strength in the longitudinal direction:

1. The tensile strength of the unrecrystallized portion, at either end of the extrusion, was about 80,000 pounds per square inch. The tensile yield strength of this portion was about 66,000 pounds per square inch at the back end of the extrusion and about 58,000 pounds per square inch at the front end. The elongation of the unrecrystallized portion, measured over a gage length equal to four times the diameter of the specimen, averaged about 14.5 percent.

2. The tensile strength, the tensile yield strength, and the elongation of the recrystallized coarse-grain portion were approximately 64,000 pounds per square inch, 49,000 pounds per square inch, and 17 percent, respectively.

3. The compressive yield strengths of the unrecrystallized and recrystallized portions at the back end of

the extrusion were 56,000 and 42,200 pounds per square inch, respectively.

4. The strength of a cross section of an extruded shape is not governed by the strength of the weaker portion but is the weighted average of the strengths of the unrecrystallized and recrystallized areas. Specimens composed partly of the unrecrystallized and partly of the recrystallized structures have tensile strengths and yield strengths between those of specimens composed entirely of either. The actual strength value depends upon the proportional amounts of each structure of which the cross-sectional area of the specimen is composed.

5. The strength of an extruded shape does not vary linearly along the length but is greater throughout most of the length than would be indicated by linear interpolation between the strengths of the two ends.

Aluminum Research Laboratories,
Aluminum Company of America,
New Kensington, Pa., August 27, 1942.

TABLE I

SUMMARY OF TEST RESULTS

Specimen	Type	Dimensions	Location (approx.)	Tensile strength (lb/sq in.)	Tensile yield strength (Offset=0.2 percent) (lb/sq in.)	Elongation (percent) 4D	Elongation (percent) 2in.	Elongation (percent) 8in.	Reduction of area (percent)	Compressive yield strength (Offset=0.2 percent) (lb/sq in.)	Grain structure (a)
1R	Plate	$\frac{7}{8}$ in. x 2 in.	$2\frac{1}{2}$ ft from front end	79,300	58,600	----	[b]15.5	[b]13.9	----	----	U
3R6C	Round	$\frac{3}{8}$ in. diam.	4 ft from front end, central portion	79,010	58,200	14.7	----	----	18.2	----	U
3R6O	Round	$\frac{3}{8}$ in. diam.	4 ft from front end, outer portion	82,160	61,800	12.0	----	----	14.5	----	U
3RC	Round	$\frac{3}{8}$ in. diam.	$5\frac{1}{2}$ ft from back end, central portion	80,970	62,900	14.7	----	----	17.4	----	U
3RO	Round	$\frac{3}{8}$ in. diam.	$5\frac{1}{2}$ ft from back end, outer portion	76,360	58,400	[c]14.7	----	----	15.3	----	Part U and part R
5R	Plate	$\frac{7}{8}$ in. x 2 in.	4 ft from back end	69,750	56,000	----	[b]12.0	[b]10.0	----	----	Part U and part R
7RC	Round	$\frac{3}{8}$ in. diam.	$2\frac{1}{2}$ ft from back end, central portion	81,200	66,100	14.0	----	----	18.2	----	U
7RO	Round	$\frac{3}{8}$ in. diam.	$2\frac{1}{2}$ ft from back end, outer portion	63,880	49,400	17.3	----	----	21.7	----	R
[d]7R	Round	$\frac{1}{2}$ in. diam.	$2\frac{1}{2}$ ft from back end, partly of central and partly of outer portions	72,850	58,100	13.0	----	----	----	----	Part U and part R
9RC	Rectangular	$\frac{1}{8}$ in. thick	2 ft from back end, central portion	----	----	----	----	----	----	56,000	U
9RO	Rectangular	$\frac{1}{8}$ in. thick	2 ft from back end, outer portion	----	----	----	----	----	----	42,200	R

[a]As shown by etched adjacent sections; unrecrystallized, U; recrystallized, R.

[b]Broke outside middle third.

[c]Broke through gage marks.

[d]Tested at plant laboratory.

TABLE II

TENSILE STRENGTHS AND TENSILE YIELD STRENGTHS OF THE ENTIRE CROSS SECTION

[Computed from data given in table I and areas indicated in figure 1]

Section	Approx. distance from back end (ft)	Unrecrystallized area (inner part of cross section)			Recrystallized area (outer part of cross section)			Entire cross section	
		Approx. percent of total area	Yield strength (lb/sq in.)	Tensile strength (lb/sq in.)	Approx. percent of total area	Yield strength (lb/sq in.)	Tensile strength (lb/sq in.)	Yield strength (lb/sq in.)	Tensile strength (lb/sq in.)
8R	2	15	66,100	81,200	85	49,400	63,880	51,900	66,400
6R	3	18	66,100	81,200	82	49,400	63,880	52,400	66,900
4R	5	42	62,900	80,970	58	49,400	63,880	55,100	71,100
3R1	$5\frac{1}{2}$	49	62,900	80,970	51	49,400	63,880	56,100	72,300
2R	$32\frac{1}{2}$	100	60,000	80,600	0	———	———	60,000	80,600

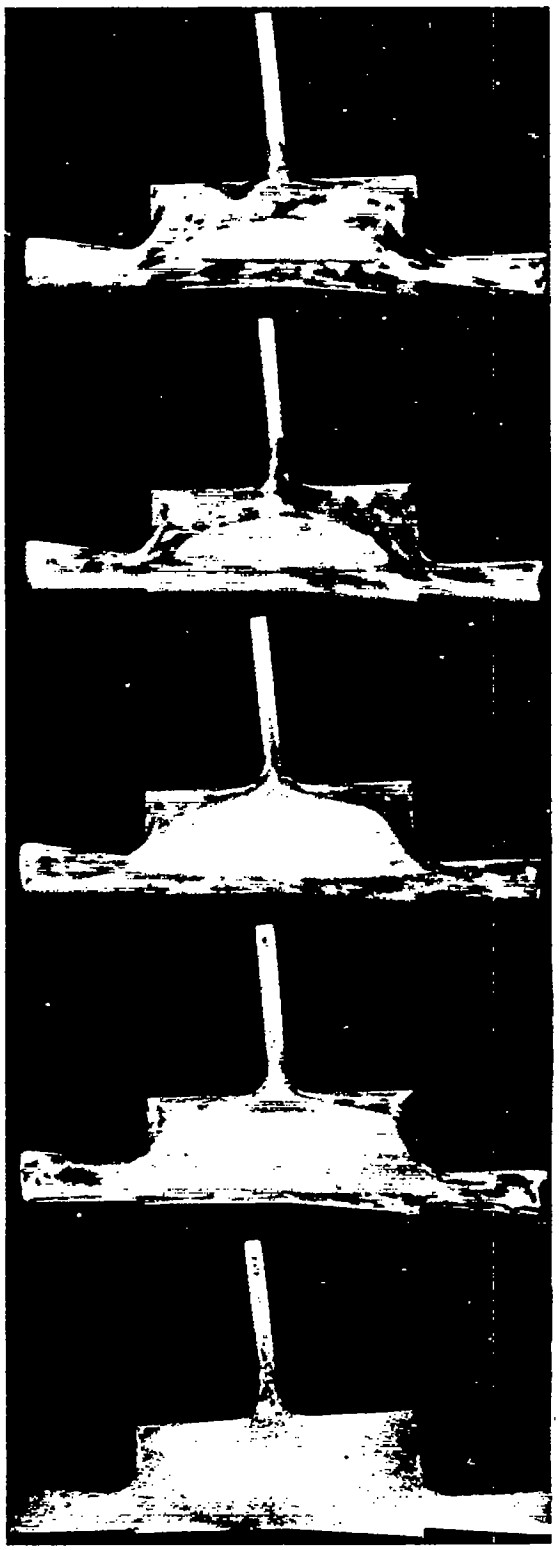

(a) Section 8R, approximately 2 feet from back end.

(b) Section 6R, approximately 3 feet from back end.

(c) Section 4R, approximately 5 feet from back end.

(d) Section 3R1, approximately 5 1/2 feet from back end.

(e) Section 2R, approximately $3\frac{1}{2}$ feet from front end.

Figure 1. - Etched cross sections of extruded shape (die K-27043) of 24S-T aluminum alloy.

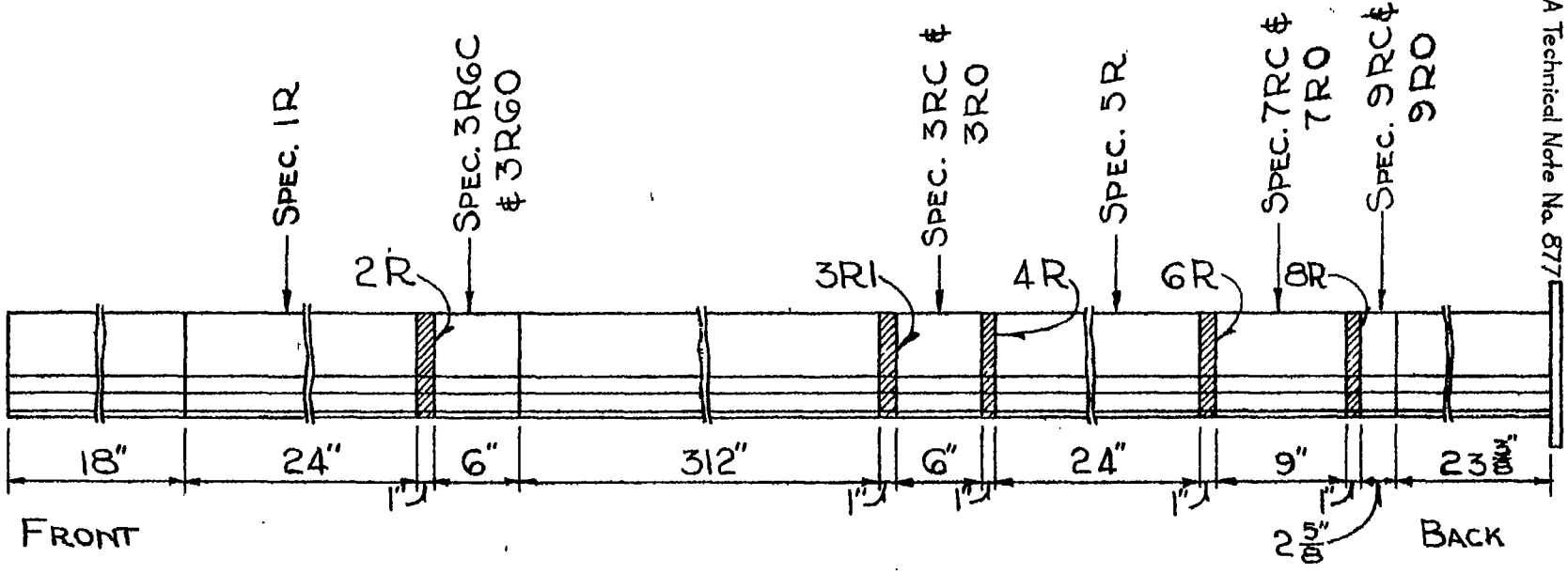

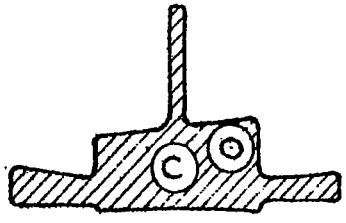

TYPICAL SECTION SHOWING LOCATION OF ROUND TENSILE SPECIMENS

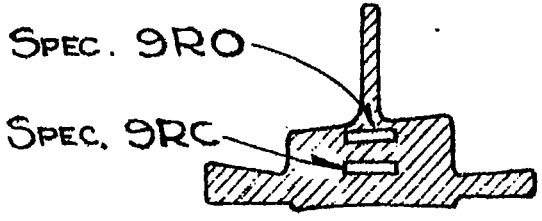

TYPICAL SECTION SHOWING LOCATION OF COMPRESSION SPECIMENS

FIGURE 2
LOCATIONS OF SAMPLES CUT FROM 24S-T EXTRUDED SECTION K-27403, LOT 13375

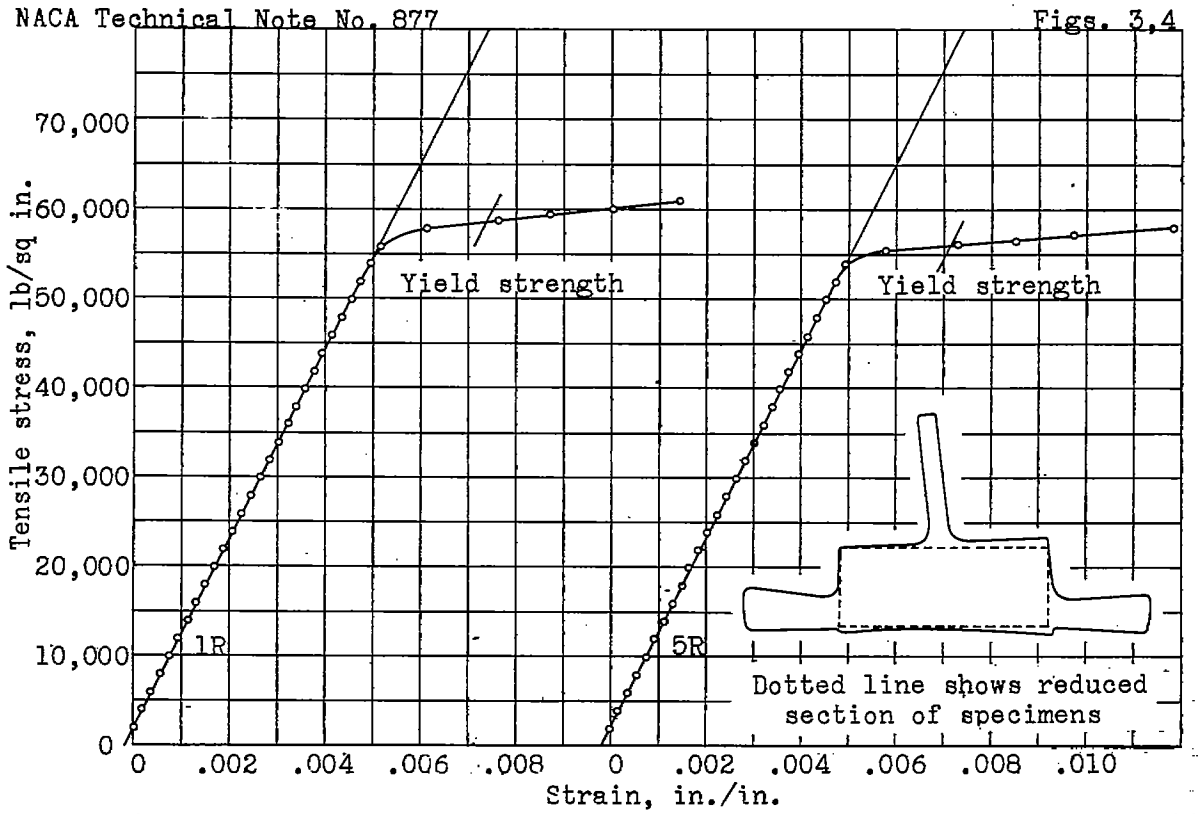

Figure 3.- Stress-strain curve for plate tensile specimens 1R and 5R.

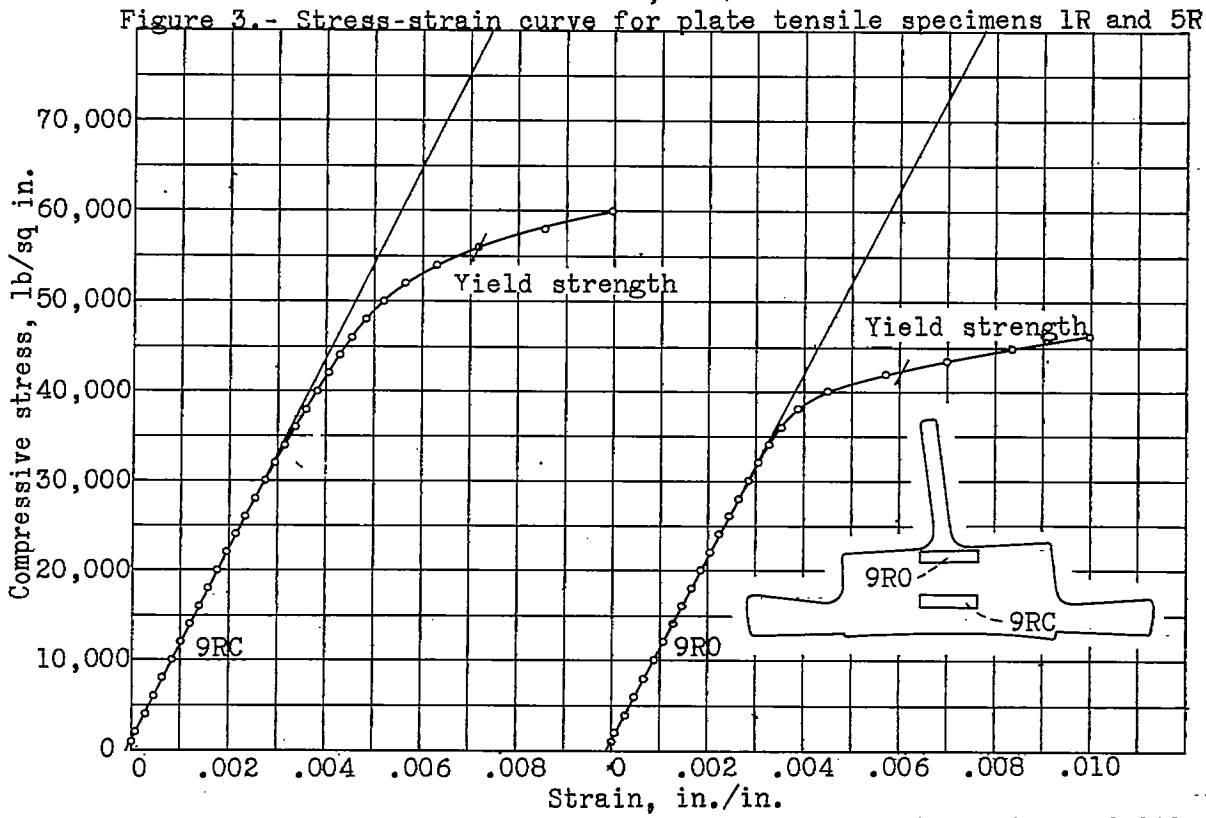

Figure 4.- Stress-strain curve for compressive specimens 9RC and 9RO.