NACA
CLASSIFICATION CANCELLED
JUN 22 1943
RESTRICTED

TECHNICAL NOTES

NATIONAL ADVISORY COMMITTEE FOR AERONAUTICS

No. 898

FOR REFERENCE

NOT TO BE TAKEN FROM THIS ROOM

ADAPTOR FOR MEASURING PRINCIPAL STRAINS WITH TUCKERMAN STRAIN GAGE

By A. E. McPherson
National Bureau of Standards

CLASSIFIED DOCUMENT

This document contains classified information affecting the National Defense of the United States within the meaning of the Espionage Act, USC 50:31 and 32. Its transmission or the revelation of its contents in any manner to an unauthorized person is prohibited by law. Information so classified may be imparted only to persons in the military and naval Services of the United States, appropriate civilian officers and employees of the Federal Government who have a legitimate interest therein, and to United States citizens of known loyalty and discretion who of necessity must be informed thereof.

FILE COPY
To be returned to the files of the Langley Memorial Aeronautical Laboratory.

Washington
June 1943

NATIONAL ADVISORY COMMITTEE FOR AERONAUTICS

TECHNICAL NOTE NO. 898

ADAPTOR FOR MEASURING PRINCIPAL STRAINS WITH TUCKERMAN STRAIN GAGE

By A. E. McPherson

SUMMARY

An adaptor is described which uses three Tuckerman optical strain gages to measure the displacement of the three vertices of an equilateral triangle along lines 120° apart. These displacements are substituted in well-known equations in order to compute the magnitude and direction of the principal strains. Tests of the adaptor indicate that principal strains over a gage length of 1.42 inch may be measured with a systematic error not exceeding 4 percent and a mean observational error of the order of ± 0.000006. The maximum observed error in strain was of the order of 0.00008. The directions of principal strains for unidirectional stress were measured with the adaptor with an average error of the order of 1°.

INTRODUCTION

The stress distribution in the plate elements of monocoque structures under load differs from that in the beam and tube elements of built-up structures of earlier types in being two-dimensional in many cases, with principal stresses of unknown direction as well as unknown magnitude.

The principal stresses σ_u, σ_v have the same directions as the principal strains e_u, e_v and, within the elastic range, they may be computed by the well-known equations (reference 1):

$$\sigma_u = \frac{E}{1-\mu^2}(e_u + \mu e_v)$$
$$\sigma_v = \frac{E}{1-\mu^2}(e_v + \mu e_u) \qquad (1)$$

where

E Young's modulus

μ Poisson's ratio

The magnitude and direction of the principal strains e_u, e_v at a given point may be calculated from strains measured along at least three lines intersecting at the point by making use of the fundamental equations of plane strain. For the particular case of three gage lines intersecting at an angle of 120° shown in figure 1, the equations (reference 2) are

$$e_u = \frac{1}{3}\left\{(e_a + e_b + e_c) + \left[2(e_a - e_b)^2 + 2(e_b - e_c)^2 + 2(e_c - e_a)^2\right]^{\frac{1}{2}}\right\}$$

$$e_v = \frac{1}{3}\left\{(e_a + e_b + e_c) - \left[2(e_a - e_b)^2 + 2(e_b - e_c)^2 + 2(e_c - e_a)^2\right]^{\frac{1}{2}}\right\}$$

$$\Theta = \frac{1}{2}\tan^{-1}\frac{\sqrt{3}\,(e_b - e_c)}{2\,e_a - e_b - e_c} \qquad (2)$$

where

e_a, e_b, e_c strains measured along the lines a, b, c

Θ angle between the principal strain e_u and the gage line a.

The strains e_a, e_b, e_c may be measured in three different ways:

1. By a hand strain gage set successibely into three pairs of gage holes along gage lines a, b, c

2. By mounting a strain gage along line a, measuring the difference in strain between the initial load and the desired load, moving the gage to lino b, repeating the loading cycle, moving the gage to line c, and repeating the loading cycle again.

3. By devices designed to measure strains along three or more intersecting lines simultaneously

Method 1 requires the drilling of gage holes in the structure and is, therefore, ruled out for thin sheet material such as used in aircraft. It also involves loss in accuracy due to frequent resetting of the gage. Method 2 has the inconvenience of requiring at least three repetitions of the loading cycle. Method 3 has been adopted by at least two investigators, as follows:

Klemperer, (reference 3), developed a "tensor gage," which is, in principle, a device for measuring strain along three gage lines, intersecting at 120°, by the displacement of three gage points which form the vertices of an equilateral triangle having a base length of about 1 inch. The three gage points are constrained to move in the direction of three radii forming a 120° star.

Ruge and de Forest (reference 4) have connected four wire strain gages into a strain rosette with four gage lines of 3/4-inch gage length making angles of 45° with each other.

Neither one of the above devices makes use of existing strain-gage equipment. It seemed desirable, therefore, to develop a relatively rugged adaptor which would permit the use of existing strain gages of proven accuracy, on a 120° rosette such as that adopted by Klemperer. The Bureau of Aeronautics, Navy Department, accordingly authorized this Bureau to conduct an investigation along these lines. This report describes the adaptor for measuring principal strains with Tuckerman optical strain gages (reference 5) which resulted from this investigation.

DESCRIPTION OF ADAPTOR

Principle

The adaptor provides a means of measuring displacements α, β, γ, of three points A, B, C, figure 2, along three lines r_a, r_b, r_c, 120° apart relative to a given center O'. The average strain e_a in the direction r_a is then related to the displacements α, β, γ, by

$$e_a = \frac{\alpha + (\beta+\gamma)/4}{3r/2} = \frac{2}{3r}\left(\alpha + \frac{\beta+\gamma}{4}\right) \qquad (3)$$

The strains e_b, e_c follow by cyclic rotation of α, β, γ:

$$e_b = \frac{2}{3r}\left(\beta + \frac{\alpha+\gamma}{4}\right); \quad e_c = \frac{2}{3r}\left(\gamma + \frac{\beta+\alpha}{4}\right) \qquad (4).$$

The gage length of the adaptor is taken as the distance $3r/2$ between a point and the line connecting the other two points. For the particular adaptor described herein $3r/2 = 1.42$ inches.

DETAILS OF CONSTRUCTION

The assembled adaptor with three 1-inch Tuckerman strain gages for measuring displacements is shown on a tensile specimen in figure 3. A bottom view of the adaptor is shown in figure 4. Dimensions of parts are given in figures 5 to 8.

The adaptor consists of a triangular platform, part 1, on which the knife edges of the three Tuckerman strain gages are mounted at 120° intervals, and three parallel motion transfers, part 7, making contact with the specimen on their bottom faces through gage points, part 9, and carrying the lozenges of the Tuckerman gages on their top face. The parallel motion transfers constrain the points A, B, and C (fig. 2) to move along the lines r_a, r_b, and r_c.

ASSEMBLY

A satisfactory procedure for assembling the instrument is as follows. Screw guard rods, part 8 (fig. 5), into base, part 1. Screw rods, part 13, into base and thread on parts 2, 5, 3, 5, and 12 as shown. Put on screw cap, part 6, loosely. Through the holes in the ends of the flexure plates (parts 5) assemble parts 4, 7, and 10 on the rod 14 as shown, tightning up first the inner end 4 at part 4. Put on screw cap, part 6, loosely. By rotating part 10 on rod 14 and the whole of the central unit on rod 13 fit part 10 over guard rod 8 as shown with shoe on part 7 on the same side as conical hole in part 1. Place this assembly on a block with the shoe of part 7 and the conical hole of part 1 up. Evenly tighten the screw caps on 13 and 14, keeping all of the parts except 8 flat on the block. As the tightening progresses, apply sufficient force to hold these parts flat. Attach the

points, part 9, by screwing them into the number 4-48 holes in parts 7. Slip center tube, part 11, through center hole in gage clamp, part 15, shown in figure 7, and press into center hole in part 1. Press in tube until it is flush with inner edge of conical hole. Put hold-down screws, part 16, in place and mount 1-inch Tuckerman optical strain gages as shown in the photograph, figure 3. The knife edges used are the uniform strain type (min. rad = 2.25 in.). Very little force is required to hold the gages down since the force is applied near the knife edge and since the knife edges act on a duralumin surface.

CALIBRATION

The adaptor was calibrated as follows.

A strip of 17S-T aluminum alloy sheet with a free length of 19 inches and a cross section of 2-1/2 by 1/8 inch was mounted in a tension-testing machine of 20,000 pounds capacity. The axial and transverse strains in the free length under loads from 900 to 7500 pounds were measured with Tuckerman strain gages. The variation of strain across and along the area used for the calibration was found to be of the order of the observational errors.

The adaptor was mounted on the strip as shown in the photograph, figure 3, and the sketch, figure 9. The weight of the adaptor was carried by the rubber bands A through the string B which was attached to the upper head of the machine. The adaptor was held against the strip with a vacuum cup and rubber bands passing through the center tube. Holding the adaptor against the specimen in this manner permits the center of the platform O, figure 2, to move freely in its plane, parallel to the plane determined by the points. The hold-down force was kept between 2 and 3 pounds in order to securely mount the adaptor without excessive edgewise load on the flexure plates. During the mounting as well as during the calibrations the load was never allowed to drop below 900 pounds; this prevented slipping of the specimen in the grips and assured that the strain corresponding to a given load remained the same throughout the tests.

In the first run one leg (leg a) was placed vertical by making the line connecting gage points for the other legs perpendicular to the edge of the specimen; a cardboard template was used to obtain accurate alinement. The

gages were tied to the adaptor with a light cord (fig. 3) as a safety precaution.

The three 1-inch Tuckerman gages on the adaptor and one 2-inch Tuckerman gage placed vertically just below the adaptor were then read simultaneously at loads increasing in small increments from 1000 to 7500 pounds. This range of loads corresponded to a range of longitudinal strain of about 21×10^{-4}.

The readings for the Tuckerman gages on the adaptor were multiplied by 2 to obtain the displacements, α, β, γ, and these were substituted in equation (3) in order to compute the strains in the direction a:

$$e_a = k_a \left(\alpha + \frac{\beta + \gamma}{4}\right) \tag{5}$$

where k_a may be regarded as a calibration constant. An experimental value of k_a was obtained by plotting $\alpha + (\beta + \gamma)/4$ against e_a and drawing a straight line through the points. The slope of this line is then equal to k_a. A typical plot is shown in figure 10. The procedure was repeated with the second leg (leg b) of the adaptor in the vertical position, and finally with the third leg (leg c) vertical. This gave the calibration constants:

$$k_a = 0.706$$

$$k_b = 0.715$$

$$k_c = 0.710$$

$$\text{average } k = 0.710$$

The value of k obtained from the nominal dimensions given in figures 5 to 7 was

$$k = 0.702$$

The difference of about 1 percent between this value of k and the experimental value is of the order expected from the machining tolerances.

ACCURACY

An estimate of the accuracy with which the adaptor indicates principal strains was obtained by comparing principal strains obtained with the adaptor with principal strains obtained from direct measurements with Tuckmerman strain gages.

Direct measurements of principal strains were obtained with Tuckerman strain gages mounted longitudinally and transversely on the strip shown in figure 3. The strains are plotted against load in figure 11. Straight lines were faired through the points in figure 11 by means of least squares.

The adaptor was then mounted on the strip in the five positions indicated in figure 12. Principal strains were computed from the readings for each position by computing e_a, e_b, e_c, from equations (3) and (4) with

$$\frac{2}{3r} = k = 0.710$$

which is the average experimental calibration factor and then substituting in the first two equations (2).

Figure 11 shows the difference between the principal strains measured with the adaptor and those corresponding to the straight lines in figure 11. Straight lines are faired through the points by least squares to indicate the magnitude of the systematic error in reading principal strains with the adaptor as compared to the random observational error which is indicated by the scatter of points about the straight lines.

The slope of the solid lines faired through the points in figure 12 indicates that the systematic error in the determination of principal strain with the adaptor averages 1.5 and that it does not exceed 4.0 percent. The mean scatter of points to either side of the line due to observational error was of the order of ± 0.000006. The maximum deviation between the principal strains measured by the two methods was of the order of 0.00008.

An estimate for the accuracy with which the direction of the principal strains may be measured for the case of unidirectional stress was obtained by substituting the

values of e_a, e_b, e_c, derived from figure 12 in the last one of equations (2). The resulting angle between the load line and the maximum principal strains is given in figure 13. The average deviation was 1° and the maximum deviation 4.5°.

CONCLUSIONS

The tests indicate that principal strains over a gage length of 1.42 inches may be measured with the adaptor with a systematic error not exceeding 4 percent and a mean observational error of the order of ±0.000006. The maximum observed error in strain was of the order of 0.00008. The directions of principal strains for unidirectional stress were measured with the adaptor with an average error of the order of 1°.

National Bureau of Standards,
Washington, D. C., February 20, 1943.

REFERENCES

1. Timoshenko, S.: Strength of Materials. D. Van Nostrand Co., Inc., 1930, p. 58.

2. Stang, Ambrose H., Greenspan, Martin, and Osgood, William R.: Strength of a Riveted Steel Rigid Frame Having Straight Flanges. Nat. Bur. of Standards Jour. Res., vol. 21, Sept. 1938, p. 312.

3. Klemperer, W. B.: The Tensor Gage. Jour. Aero. Sci., vol. 7, no. 9, July 1940, pp. 403-404.

4. de Forest, A. V.: Characteristics and Aircraft Applications of Wire Resistance Strain Gages. Instruments, vol. 15, no. 4, April 1942, pp. 112-114, 136-137.

5. Tuckerman, L. B.: Optical Strain Gages and Extensometers. Proc. A.S.T.M., vol. 23, 1923, pp. 602-610.

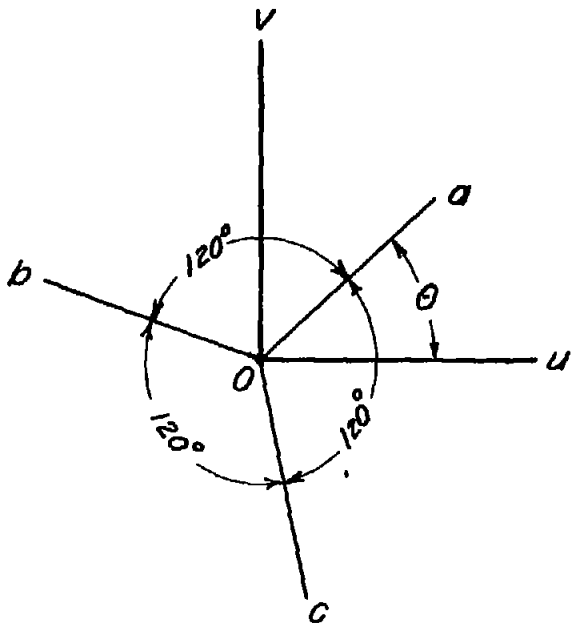

Figure 1.-
Three gage lines (a, b, c) intersecting at O.
Directions (u, v) of principal strains.
(As shown above the angle θ is positive)

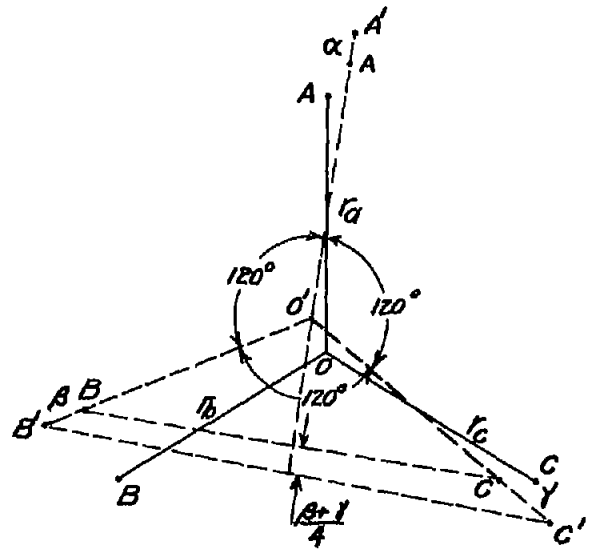

Figure 2.-
Before strain, adaptor is centered at O
After strain, adaptor is centered at O'

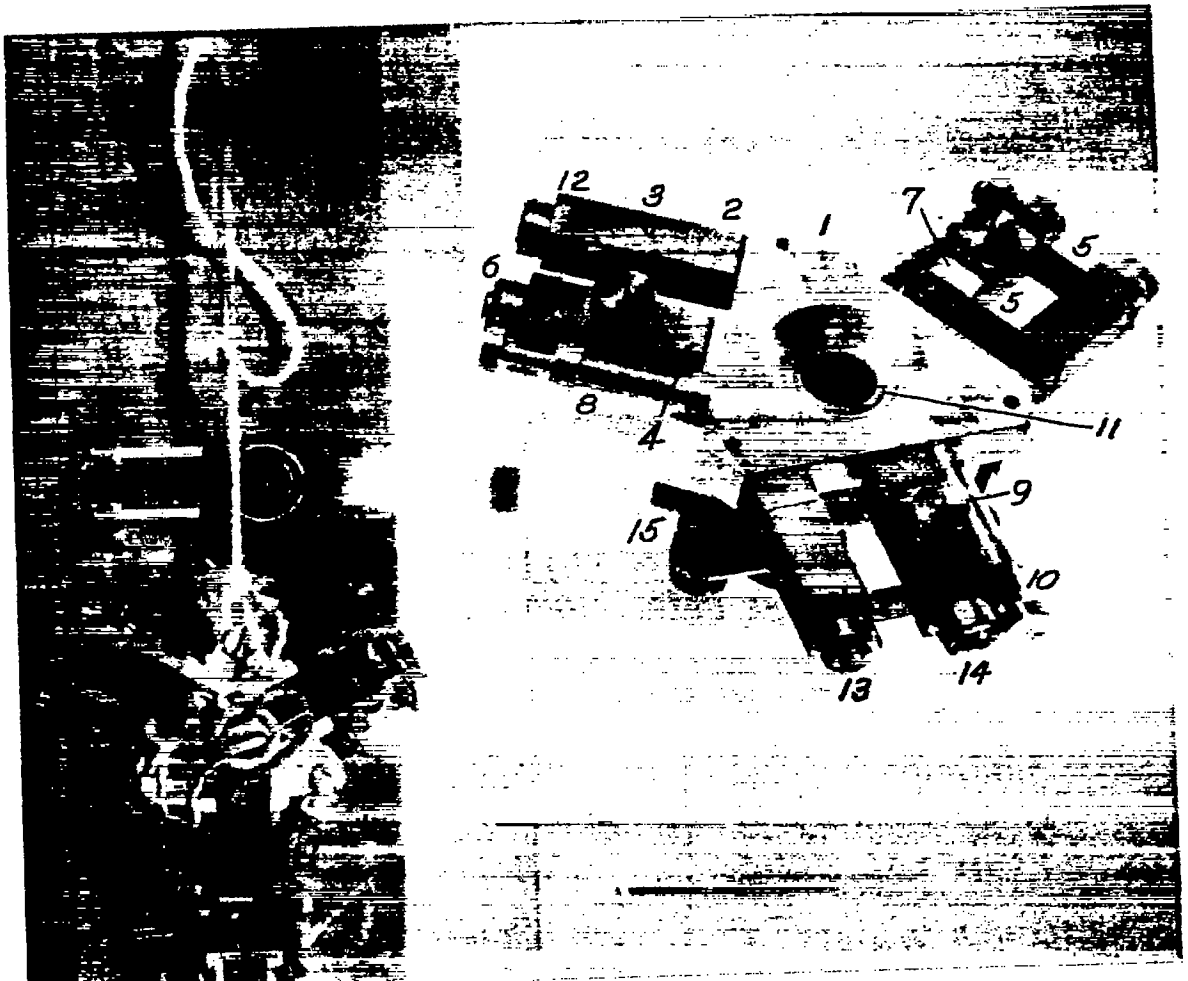

Figure 4.- Bottom view of adaptor.

Figure 3.- View of assembled adaptor showing strain gages for measuring displacement.

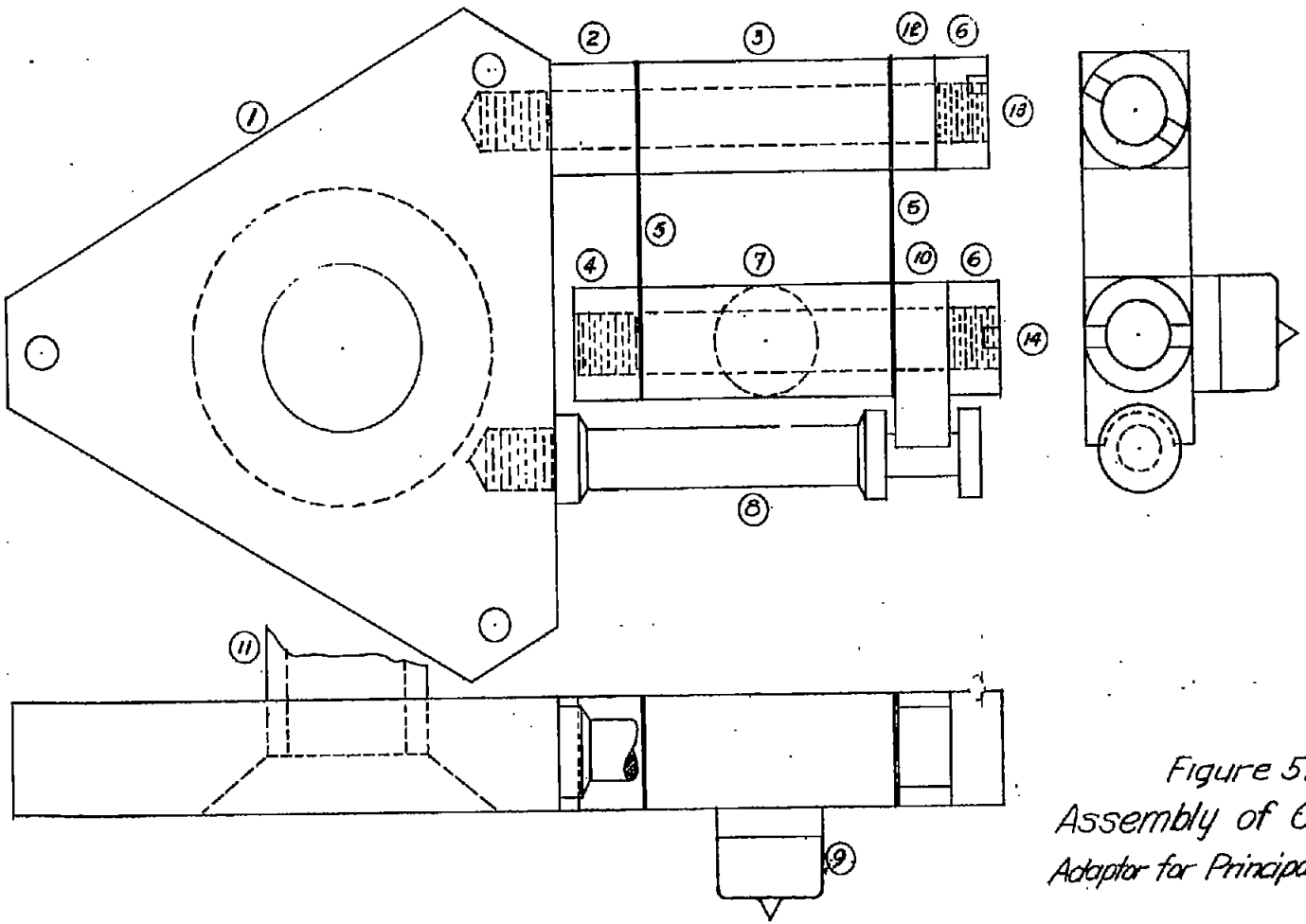

Figure 5.-
Assembly of One Leg
Adaptor for Principal Strains

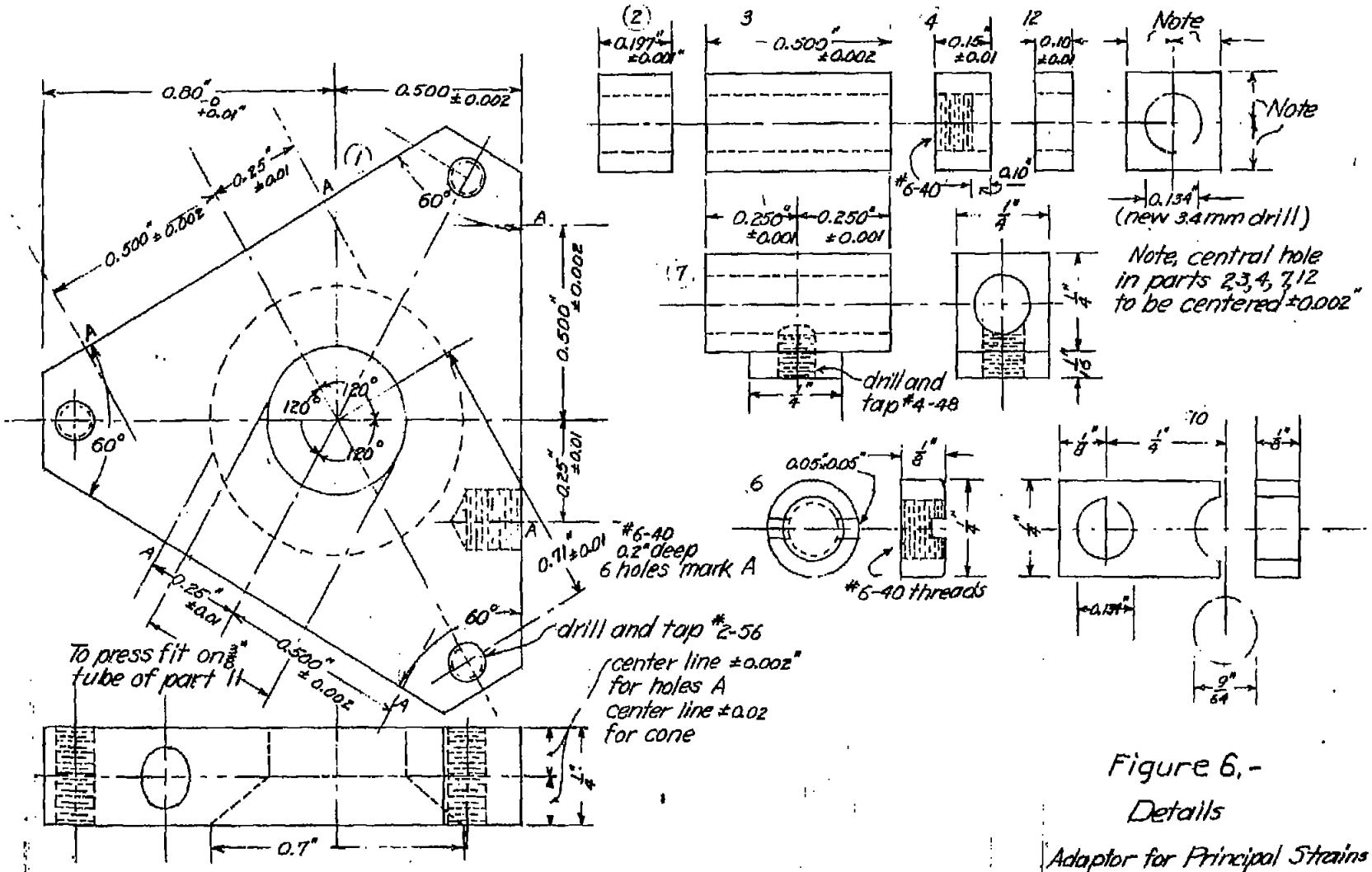

Figure 6.- Details

Adaptor for Principal Strains

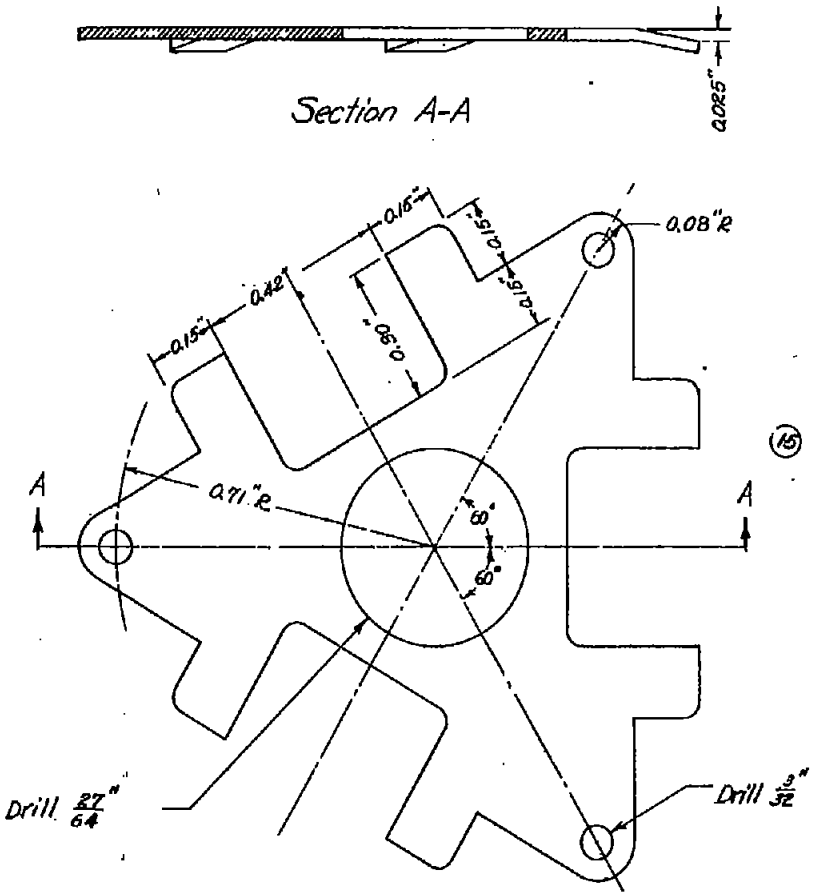

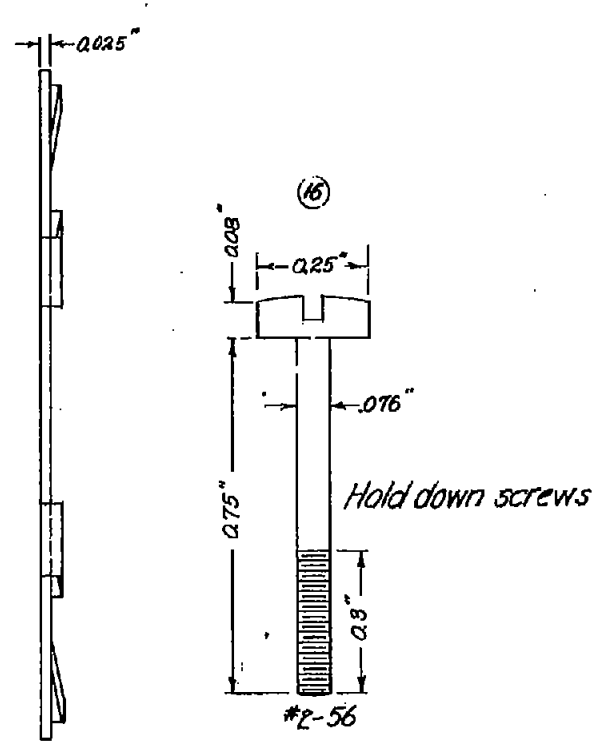

Figure 7.– Details

Adaptor for Principle Strains

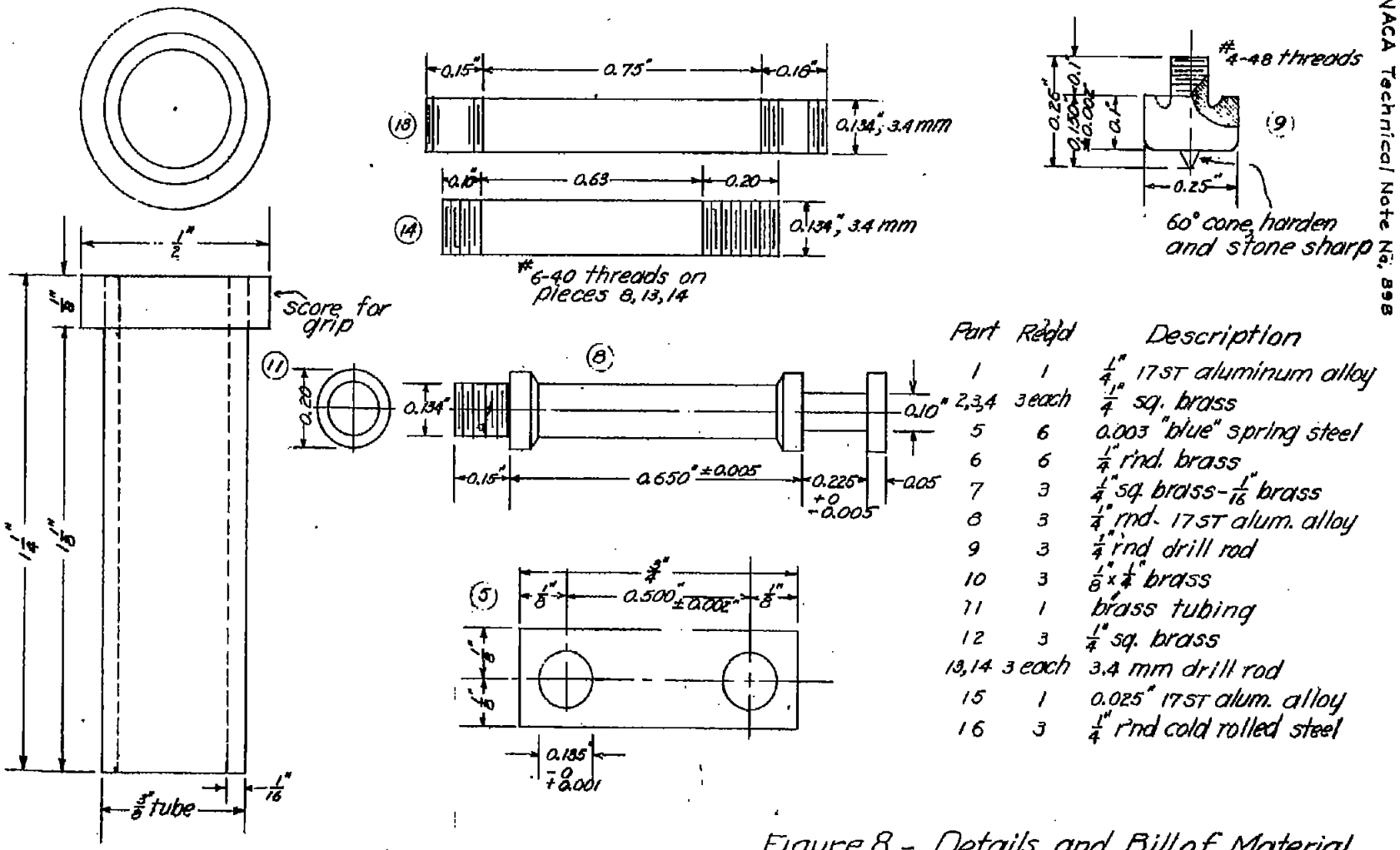

Part	Reqd	Description
1	1	1/4" 17ST aluminum alloy
2,3,4	3 each	1/4" sq. brass
5	6	0.003 "blue" spring steel
6	6	1/4" rnd. brass
7	3	1/4" sq. brass-1/16" brass
8	3	1/4" rnd. 17ST alum. alloy
9	3	1/4" rnd drill rod
10	3	1/8" x 1/4" brass
11	1	brass tubing
12	3	1/4" sq. brass
13,14	3 each	3.4 mm drill rod
15	1	0.025" 17ST alum. alloy
16	3	1/4" rnd cold rolled steel

Figure 8.- Details and Bill of Material

Adaptor for Principal Strains

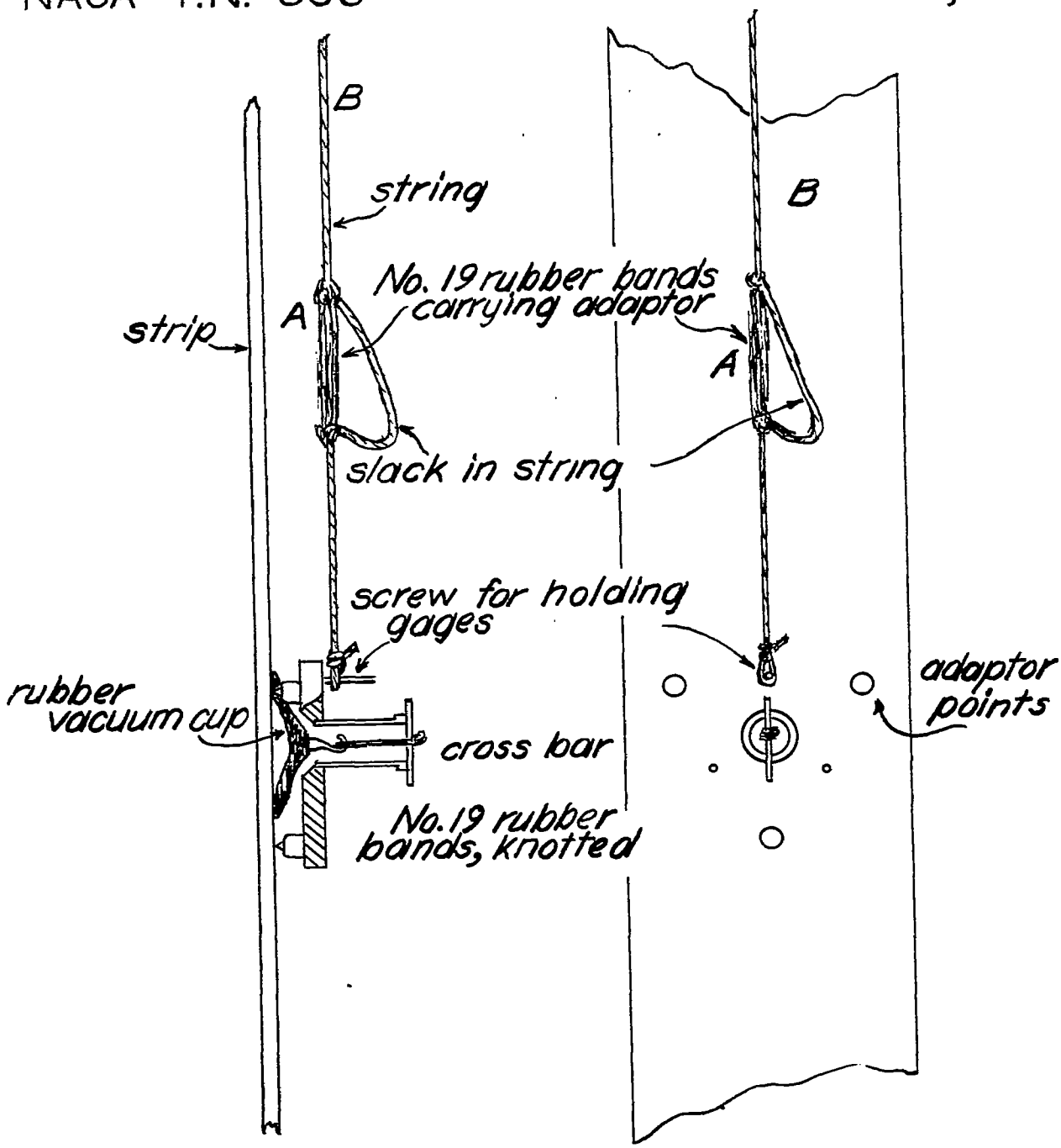

Schematic diagram of adaptor attached to strip
Figure 9.-

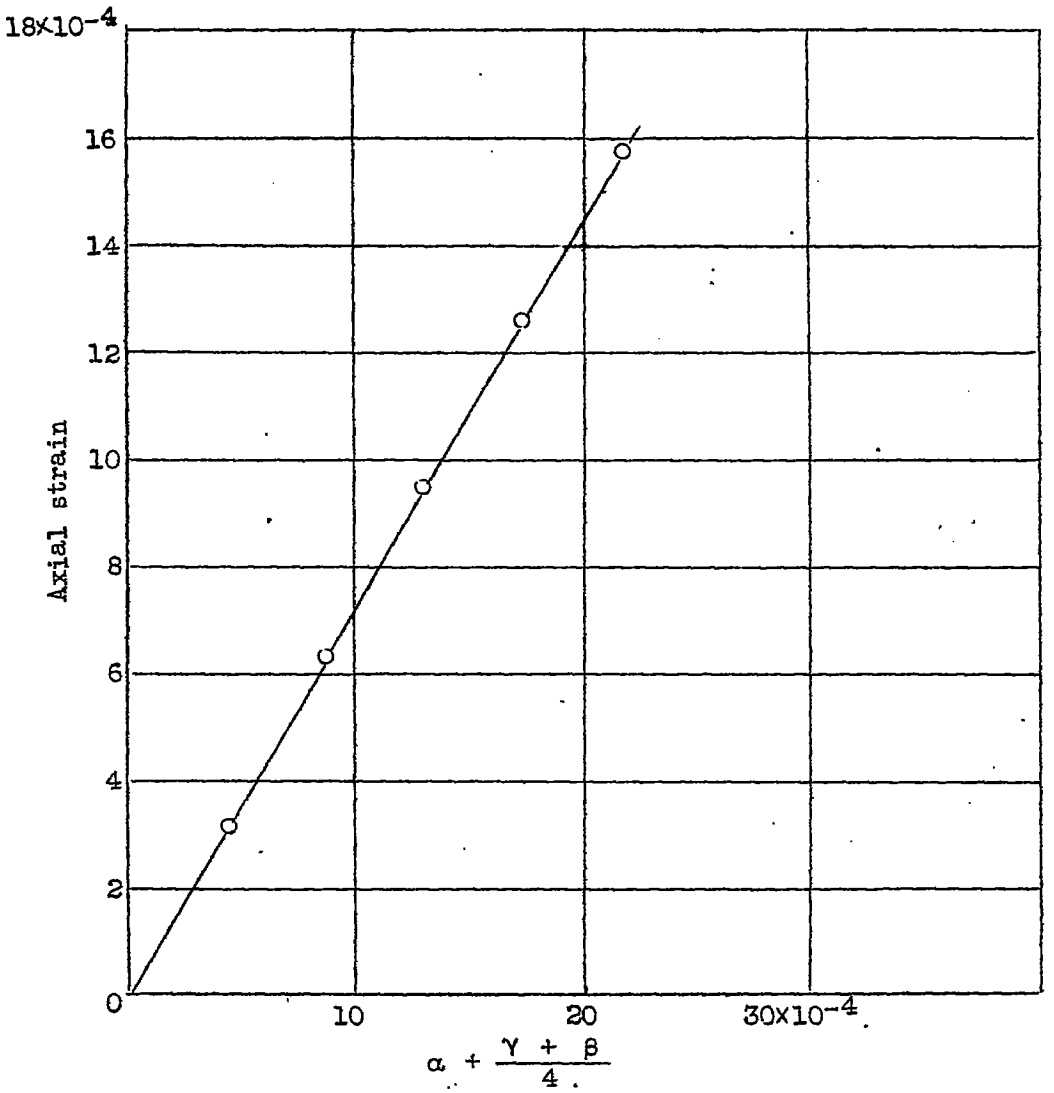

Figure 10.- Typical plot for determination of k.

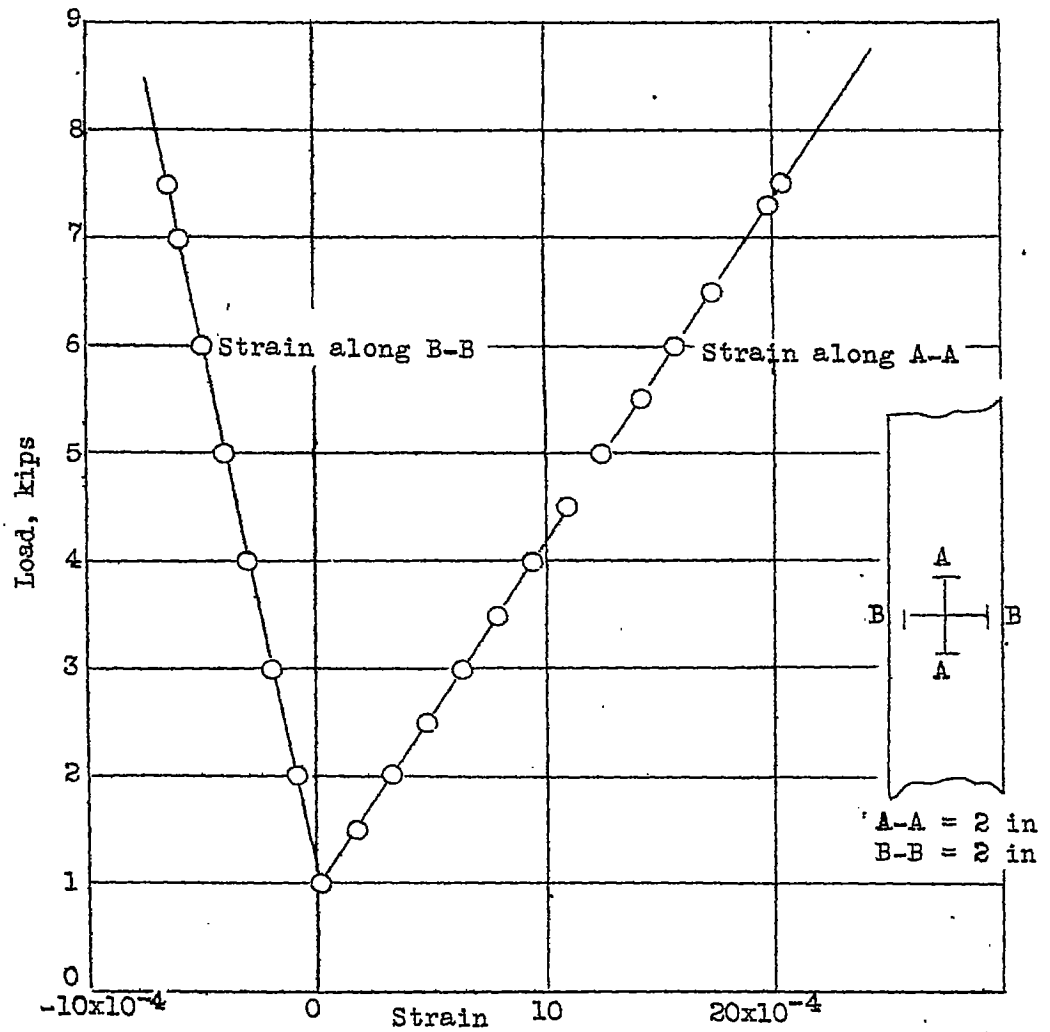

Figure 11.- Principal strains obtained with two-inch Tuckerman strain gages.

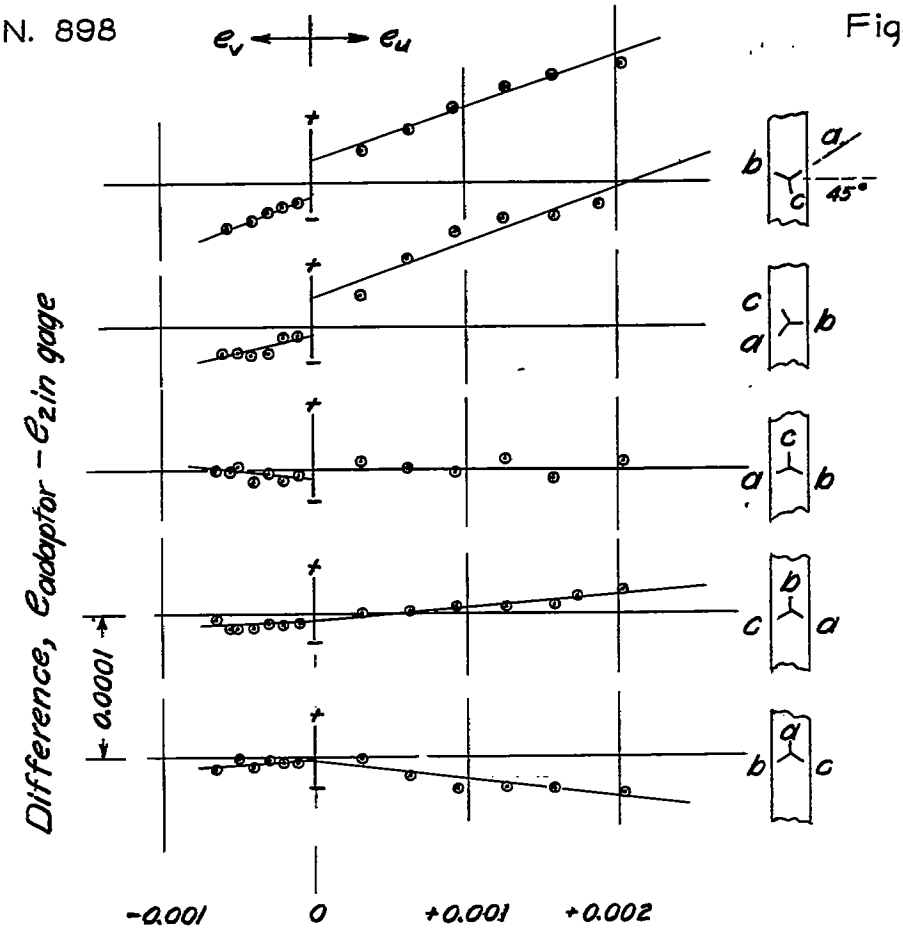

Figure 12.-Strain, from 2in gages

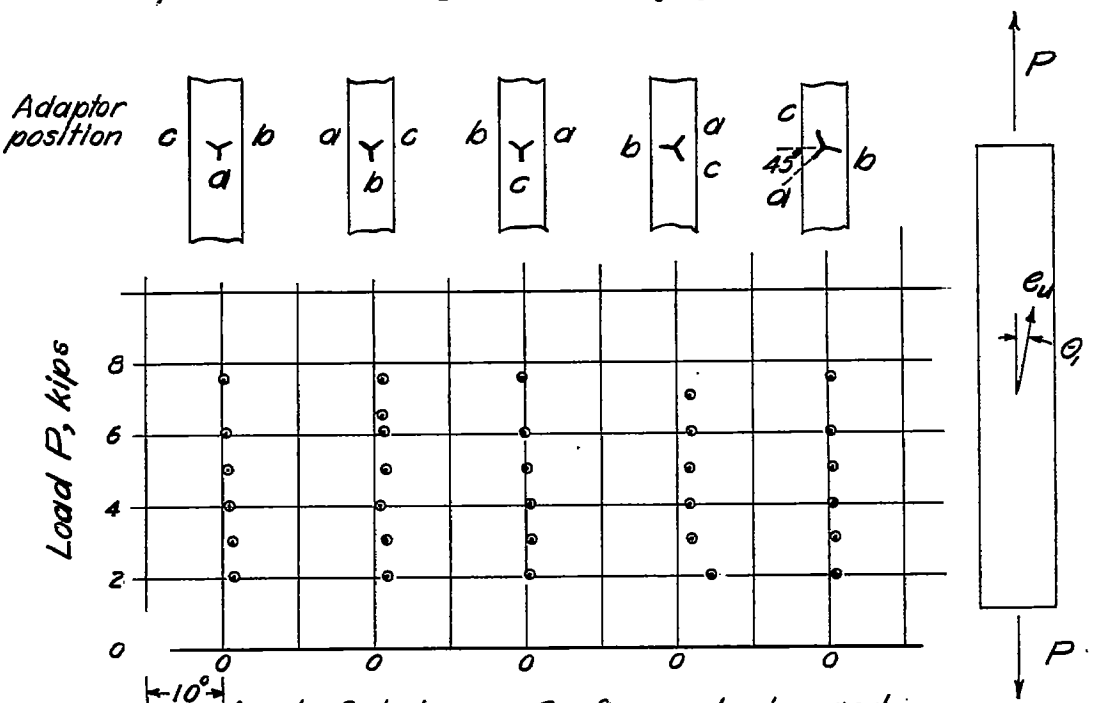

Figure 13.-Angle θ_1 between e_u from adaptor and edge of strip