NACA
CLASSIFICATION CANCELLED
OCT 12 1945

NATIONAL ADVISORY COMMITTEE FOR AERONAUTICS

TECHNICAL NOTE

No. 977

DEVELOPMENT OF A DETONATION DETECTOR SUITABLE FOR USE IN FLIGHT

By C. S. Draper, E. S. Taylor, J. H. Lancor
and R. T. Coffey
Massachusetts Institute of Technology

Washington
December 1944

(Reprint of ACR, November 1939)

LIBRARY

NASA Technical Library
3 1176 01433 2820

NATIONAL ADVISORY COMMITTEE FOR AERONAUTICS

TECHNICAL NOTE NO. 977

DEVELOPMENT OF A DETONATION DETECTOR SUITABLE FOR USE IN FLIGHT

By C. S. Draper, E. S. Taylor, J. H. Lancor, and R. T. Coffey

SUMMARY

Apparatus for making quantitative measurements of the vibrations excited by detonation in the cylinder head of an aircraft engine was designed and constructed. The apparatus consisted of: pick-up units designed to operate under engine conditions and to produce an electrical output proportional to the velocity of a small diaphragm, an amplifying system with uniform sensitivity from 5 to 40,000 cycles per second, and a cathode-ray oscillograph with a high-speed-camera recording system.

A large number of records were taken under various operating conditions in a single-cylinder aircraft engine. The final detonation detector was tested in two full-scale multicylinder engines. The instrument checked well with visual observations of the exhaust and could detect the occurrence of moderate knock as distinguished from the vibration caused by valve seating.

INTRODUCTION

Detonation measurements are required for the knock rating of fuels and for the determination of the detonation intensity present in a given engine under specific conditions. The magnitude of some physical quantity depending on detonation must be found and related to other values. The accepted reference scale is based on the detonating tendencies of mixtures of isooctane and heptane, which detonate under increasingly severe conditions as the composition is changed from pure heptane to pure isooctane.

Vibrations are always present in the combustion-chamber walls and the cylinder structure during engine operation. In the absence of detonation, these vibrations are set up by the closing of valves, the piston slap, the motions of other engine parts, and the pressure rise accompanying normal running. The effect of these single shocks will damp out after a few degrees of crankshaft travel and a vibration record appears as a series of discrete wave trains.

Detonation causes vibrations in the cylinder wall and head structure owing partly to the shock of the initial pressure rise and partly to forces exerted by pressure waves within the cylinder gases. The vibration due to detonation can be distinguished from purely mechanical effects because detonation occurs at a period in the cycle when the valves are closed and no other source of strong excitation is active.

Vibration of the combustion-chamber walls introduces a difficulty in the measurement of the pressure fluctuations accompanying detonation because any indicator sensitive to pressure will also be sensitive to vibration. The output from a pressure-pick-up unit will therefore be due partly to vibration and partly to actual pressure changes. It may be feasible to design a unit with automatic vibration compensation but such a device is not available at the present time.

The vibrations in the combustion-chamber wall that are troublesome in pressure measurements during detonation can be used to operate the pick-up unit of a detonation indicator. If a properly designed vibration pick-up unit is rigidly attached to the combustion-chamber wall and connected to an averaging indicator, it will give a residual reading in the absence of detonation owing to mechanical-vibration effects. When detonation occurs, the indicator reading will increase by an amount depending on the increase in vibration caused by the detonation. The usefulness of such an instrument will depend on the relative effects of the residual vibration and the smallest intensity of detonation it is desired to measure. Actual vibration measurements will probably be required to decide the possibilities in a given case.

Beale and Stansfield (reference 1) have recently described a detonation indicator actuated by vibrations in the cylinder wall. It consists of an electromagnetic generator mounted externally on the cylinder wall in such a manner that longitudinal strains cause a change in length of an air gap that controls the magnetic flux linking a coil of wire. A vacuum-tube arrangement amplifies and rectifies the output

voltage and a meter gives a reading proportional to the mean strain velocity. No attempt to use absolute motion of the cylinder head or wall to operate a pick-up unit is described in the reference.

When detonation occurs, the number of carbon particles carried by the gases increases with the result that a characteristic black smoke appears in the exhaust. The change in the appearance of the exhaust flames is definite but a skilled observer is required to base estimates of detonation intensity on this source. This method of estimating detonation is in common use by aircraft-engine manufacturers.

From considerations of general usefulness, the development of an instrument to measure detonation in terms of cylinder-head vibrations is very desirable. A small and rugged pick-up unit externally attached to the combustion-chamber wall and operating a proper indicator would form a system suitable for use under laboratory or flight conditions. The fundamental problem of such a device is the separation of the vibration due to detonation from the motion produced by normal cycle events.

DETONATION AS AN ENGINE PROBLEM

Definition of Detonation

Detonation or knocking in the internal combustion engine is associated with an abnormally rapid reaction in some part of the cylinder charge. This phenomenon is called "knocking" because of the characteristic ringing sounds that are audible in the free air near the engine if the general noise level is not too high. The term "detonation" has its origin in a series of experiments reported by Berthelot and Vieille (references 2, 3, and 4). The findings of these investigators, which have been checked by the results of many subsequent researches, showed that two general types of flame travel can occur in a combustible gas:

1. Normal combustion, in which the reaction proceeds by means of heat transfer and mechanical transport of burning particles into the active medium ahead of the flame front, resulting in flame speeds of a few meters per second; and

2. Detonation, in which combustion proceeds so rapidly that the reaction is completed before any substantial amount

of energy can leave the reaction zone either by mechanical expansion or by heat-transfer processes. Under this condition, a localized region of high pressure is produced which travels through the medium with the flame front at a speed often several times the speed of sound in the unburned gas. Experiments on flame propagation in closed vessels showed that detonating combustion was often accompanied by a ringing sound. This observation, coupled with the reasonable feeling that the ringing noises in engines could be due to a process similar to that occurring in closed vessels led to the general use of the term "detonation" to describe an engine phenomenon. Becker (reference 5) has given a discussion of the detonation wave in one dimension in which he summarized the work of previous investigators and extended their results to give a clear picture of the conditions that must be fulfilled in the wave front.

Combustion experiments in tubes and closed vessels received much attention from 1880 until the present time but did not yield results that could be directly applied to detonation in engines. The physical nature of detonation in engines was not definitely known until simultaneous records of flame travel and pressure development were made in actual engines. Using this general method, Marvin and his collaborators (references 6, 7, and 8) at the National Bureau of Standards and Withrow and Rassweiler (references 9, 10, and 11) in the General Motors research laboratories showed that detonation is characterized by extremely rapid flame movement in the last part of the charge to burn and a simultaneous sudden increase in pressure. The work at the National Bureau of Standards was done with stroboscopic methods suitable for giving values averaged over a number of cycles rather than continuously following the events of a single explosion. On the other hand, continuous recording methods with a transparent window in the combustion chamber were used in the General Motors laboratory. These experiments showed not only the general flame motion but also proved the existence of intense pressure waves within the engine cylinder after the initial "knock" had occurred. Figure 1 is a combination record of flame travel and cylinder pressure which shows that vibratory motions of luminous particles inside the chamber were accompanied by corresponding fluctuations in pressure. The indications of these records are confirmed by such a great amount of data from other sources that there is at present no doubt that detonation is characterized by a local rise of pressure in some part of the charge followed by standing waves within the combustion chamber.

Wawrziniok (reference 12) studied the longitudinal pressure waves following detonation in a closed chamber and in engine cylinders by means of a piezoelectric pressure indicator. He showed that the observed frequencies were in agreement with those predicted by the theory of sound on the assumption of resonant pressure waves within the chamber. Draper (references 13 and 14) analyzed the possible resonant wave systems for a circular cylinder with flat ends on the basis of the theory of sound. Experiments carried out on a CFR engine and an NACA universal test engine with a special head gave results in good agreement with theoretical predictions both with regard to general behavior of the wave systems and to specific frequency values. From the data supplied by instantaneous records taken at two or more points on the combustion-chamber walls, the theory makes it possible to give an approximate estimate of the energy density, the particle velocity, and the particle displacements associated with a given initial disturbance.

Fundamentally, detonation in the engine is identical with the process occurring in the reaction zone of a one-dimensional detonation wave in the sense that both are characterized by such a high rate of reaction that an intense local pressure disturbance is produced. All the data reported in the literature agree that considerable variation occurs between successive cycles under identical engine conditions but that the events always have the same general nature.

In the picture of detonation just given, pressure waves must always be present in the combustion chamber following the initial pressure rise. These waves are by-products of the energy-equalization process that follows any local disturbance and, in many cases, probably do not directly have a serious effect on engine operation. They do, however, offer a means for detecting or measuring detonation since their nature will always be a function of the magnitude of the initial disturbance.

The Effect of Detonation on Engine Operation

Detonation has several characteristic effects on engine operation and is often accompanied by other deviations from normal running which can be partly due to other causes. The immediate effects of detonation are:

1. A characteristic ringing sound outside the engine if masking noises are absent

2. An alteration in the power output due to a decrease in the total time required for complete combustion of the charge. This effect is equivalent to an increase in spark advance and varies in magnitude with engine conditions and the severity of detonation.

3. A change in the appearance of the exhaust flame

4. The appearance of carbon particle clouds in the exhaust

The characteristic sound is used in making estimates of detonation intensity either by trained observers or with the aid of a properly constructed noise meter. The change in power due to the increased average rate of burning under detonating conditions is usually small but can easily be measured if tests are made with abnormal spark advance settings. Items 3 and 4 are mentioned by Young (reference 15) in discussing means for detecting detonation in full-scale aircraft engines. It is common in present-day practice for a skilled observer to make estimates of detonation intensity by visual examination of the flame and particles issuing from short exhaust stacks.

The most serious effects associated with detonation are not characteristic of the phenomenon since it is well known that they do not necessarily occur in well-designed engines when detonation is present and that, under certain conditions, they may appear when detonation is absent. These effects are:

1. General overheating of surfaces bounding the combustion chamber

2. Local overheating of surfaces in contact with the knocking zone

3. Local overheating of parts not in contact with the knocking zone

4. Mechanical damage to parts exposed to the cylinder gases. In a properly designed engine, this damage appears to be due to a combination of thermal and pressure effects rather than to high pressure alone.

It is to be noted that increased heat transfer plays an essential role in each of the items mentioned. This fact is

in accord with common experience, which shows that an engine will withstand detonation of a given intensity for a period depending upon the spark plug used and the combustion-chamber design. In some cases the limiting factor is preignition due to some excessively hot surface in contact with the unburned mixture. When preignition takes place, the result is either a serious reduction in power output or a complete failure of engine operation. The period that intervenes between the start of detonation and the occurrence of preignition depends upon the time required for increased heat flow from the cylinder charge to raise the temperature of some solid part to the preignition level. Young cites evidence supporting this theory when he states that the resistance of an aircraft-engine cylinder to detonation can be improved by better cooling of hot spots and changes in construction of the spark plugs. An additional pertinent fact is that an engine such as the CFR will withstand severe detonation for long periods without apparent damage, while aircraft engines are quickly damaged by heavy detonation. It is not clear whether the difference is due to the fact that the CFR engine combustion chamber is made of cast iron, which is relatively strong at high temperatures as compared with the aluminum used in aircraft engines, or to the fact that aircraft engines normally operate at a relatively high temperature and, consequently, are more apt to fail with a small temperature increase.

It has been shown that the most serious effects accompanying detonation can be traced directly to high temperatures. If the abnormally heated part is seriously weakened by high temperatures, mechanical damage or failure will occur. On the other hand, if the part affected can mechanically withstand high temperatures, preignition will start whenever some lower temperature limit is exceeded. Abnormal pressures may play some part in the mechanical damage due to detonation. A like amount of chemical energy is released per cycle by combustion, however, whether or not detonation occurs; the average combustion-chamber pressure must therefore be the same in the two cases. This conclusion means that any effects due to pressure alone must be localized in the knocking zone where the initial disturbance occurs.

With the ill effects of detonation traced directly to an abnormally high temperature of some surface exposed to the cylinder charge, it remains to consider the mechanism responsible for this condition. Constant conditions in the external-dissipation system being assumed, the temperature of any part of the combustion-chamber boundary depends upon the average temperature difference between the hot gases and the

boundary and upon the resistance to heat flow across the gas film in immediate contact with the solid part. In the knocking zone, relatively high temperatures will coexist with high density during detonating combustion, the high density resulting in a higher heat-transfer coefficient, while the high particle velocities that accompany the rush of gas away from the region of high pressure will certainly tend to scrub away the protective coating of stagnant gas of almost molecular thickness from the wall and so reduce the film resistance to heat flow. It is thus to be expected that surfaces actually in contact with the detonating part of the charge will tend to reach excessive temperatures. If the external cooling system is insufficient to care for the increased heat flow, a hot spot will develop in the cylinder wall which may cause either preignition or mechanical failure. In addition to this effect, even if the external cooling system is able to prevent the development of a hot spot, the instantaneous temperature gradients near the surface of the metal combined with local pressure effects may lead to chipping off of small particles. Action of this type would account for the "moth-eaten" appearance of aluminum-alloy pistons taken from engines that have been subjected to detonation.

It is well known that preignition will often follow detonation induced by the addition of a small amount of some knock-inducing agent to the fuel-air mixture. The tendency to preignite is usually dependent upon the type of spark plug used. It follows that, in cases of this type, the overheated surface is definitely not exposed to the severe conditions of the knocking zone. As the amount of knock inducer required is definitely too small to make an appreciable change in the energy content of the charge, the average gas temperature must be substantially the same with detonation as with normal operation. For this reason, temperature difference cannot enter as an important variable in the overheating of a part remote from the knocking zone. The remaining effect, which could be responsible for increased heat flow, is a sufficiently violent disturbance of the gas particles near the walls to reduce the resistance to heat flow. Such a disturbance could be produced by the particle motions accompanying intense pressure waves within the combustion chamber. This scrubbing action would be intensified for surfaces near the opening of a cavity such as the space between the central electrode and outer shell of a spark plug. With the relatively high resistance to heat flow from spark-plug points to the cylinder wall, it is not surprising that overheating should occur after a period of detonating operation.

Withrow and Rassweiler (reference 16) have discussed the possibility that the scrubbing action due to particle disturbances accompanying detonation may cause a decrease in film resistance to heat flow and thus be responsible for a general increase in heat dissipation to the cooling medium. This explanation of increased heat transfer to the combustion-chamber walls is essentially similar to that given in the last paragraph for the overheating of spark-plug points and can reasonably be taken as correct. When practical cases are considered instead of the artificial example of detonation induced without modification in engine or mixture conditions, however, it is at once apparent that, in some instances, detonation appears as a result of changes which would in themselves cause increased temperature of parts exposed inside the combustion chamber. One specific case is that in which overheating occurs as a result of increasing intake pressure by supercharging. This overheating might occur in the absence of detonation owing to limitations of the cooling system. It would be unfair to attribute all the difficulty to detonation merely because it happened to coexist with the severe cylinder conditions produced by supercharging. A second instance is that of overheating induced by changing the mixture from rich to lean with other engine conditions held constant. Such an alteration in mixture strength is known to cause increased cylinder-head temperatures when no detonation occurs. On this account, any investigation of detonation based on the effect of mixture ratio on cylinder-head temperature should include some method of separating the change due to detonation from the change due directly to mixture-ratio effects. That the observed rise in cylinder-wall temperature does not always result directly from detonation is shown in reference 15.

Detonation as a Factor in Limiting Engine Performance

Power output from an internal-combustion engine is a function of the mass of air flowing through the engine in unit time, the specific energy content of the fuel-air mixture, the efficiency with which heat is converted into mechanical losses in the engine. The chemical energy content of the mixture varies somewhat with the fuel-air ratio but is substantially constant for all commercial fuels in use at the present time. For all modern engines of good design the mechanical efficiency is about the same so that this factor can be disregarded in a generalized discussion of engine performance. Air consumption in an engine of given size depends upon the number of cycles per unit time and the charge density

when the intake valve closes so that the output can be increased either by raising the speed or by supercharging. A more or less definite upper limit is placed on speed by mechanical considerations and the restriction to air flow in rapidly operating valves so that the most economical expedient for obtaining increased power at a given atmospheric pressure is to use a supercharger. The remaining possibility for improving the performance with a given piston displacement is to increase thermal efficiency by raising the compression ratio. This method is particularly desirable since the increased output is accompanied by better fuel economy.

Unfortunately for the spark-ignition engine, performance improvements achieved either by increasing the compression ratio or by supercharging lead, if carried too far, to detonation when present-day commercial fuels are used. Pye has given a discussion of the fundamental factors controlling engine performance in his textbook (reference 17). Pye outlines the reasoning behind the commonly accepted conclusion that detonation is the fundamental factor which limits both power output and fuel economy in modern engines. Quantitative data on the maximum engine performance obtainable with various fuels have been given by Barnard (reference 18), Veal (reference 19), and Rothrock and Biermann (reference 20).

Factors Controlling Detonation

Detonation has been studied by many investigators since this phenomenon was recognized as a major engineering problem during the early stages of aircraft-engine development. From the large amount of information collected, it has become certain that conditions existing in the last part of the charge to burn determine whether or not detonation will occur. C. F. Taylor and E. S. Taylor (reference 21), discussing the nature of detonation in 1934, noted the importance of the temperature of the last part of the charge to burn. These writers said: " . . . the significant temperature in determining whether or not a given mixture detonates, is the highest temperature reached by the last part of the charge before its combustion. If this is above its minimum 'self-ignition' temperature, and if the normal flame does not pass through it too soon, it will detonate." Rothrock and Biermann (see reference 20) have presented evidence to show that density must be added to temperature as a controlling factor in whether or not detonation occurs in some part of the cylinder charge. The reasoning used by these writers to develop a system for knock-rating fuels is outlined in the following quotation:

"Since knock is a phenomenon of combustion, it must be controlled by the physical state of the gases in the combustion chamber as well as by the chemical composition of the gases. It seems most reasonable to believe that the gas density and the temperature immediately preceding knock are the controlling physical properties. The engine conditions which control these two properties are:

1. Compression ratio R

2. Spark advance

3. Inlet-air temperature T_1

4. Inlet-air pressure P_1

5. Cylinder-wall and combustion-chamber-wall temperature

6. Engine speed

7. Air-fuel ratio

8. Exhaust-gas dilution

The first five factors are the major independent variables. The last three factors also affect the density and the temperature of the gas, but the other effects they have on the combustion may be of more importance. The effect of air-fuel ratio can be eliminated by considering that, for any given set of conditions for factors 1 to 4, any air-fuel ratio that causes knocking is being considered. Exhaust gas dilution does not vary much over the normal full-throttle range of engine-operating conditions and will not be considered in this analysis. The effect of engine speed will be discussed later in more detail.

"If the assumption is accepted that the two physical properties controlling knock are the gas density and the gas temperature, it can be said that, for each gas density, there is a minimum gas temperature at which knock will occur. If this contention is true, it follows that a fuel can be accurately rated by determining the relationship between the gas temperature and the gas density that results in knock. A second, and equally important, contention is that it will be impossible to rate a fuel accurately by determining one and only temperature at which knock occurs. A fuel should be rated, then, not by octane number, highest useful compression ratio, compression pressure, or any other single value, but by a curve of density against temperature.

"The gas density ρ and the gas temperature that are the immediate causes of knock are the density and the temperature of that portion of the charge in the knocking region of the combustion chamber the instant before knock occurs. This density can be measured fairly easily and accurately but the temperature cannot. The feasibility of using the temperature and density at some other time in the cycle must be determined. Since all fuels burn with approximately the same flame speed, the density and temperature at the start of combustion or at top center (assuming no combustion before top center) should provide a satisfactory measure of the conditions in the knocking region. The density at top center, if it is assumed that all the fuel is vaporized, depends on the compression ratio, the inlet-air pressure (including volumetric efficiency), the inlet-air temperature, and the heat of vaporization of the fuel. Inasmuch as the heat of vaporization of all hydrocarbon fuels is about the same, the speed of combustion and the heat of vaporization need not be considered. If a constant spark advance is assumed, it can be stated that

$$\rho \propto R\ P_1 \frac{1}{T_1}$$

From this relationship, $R\ P_1/T_1$ can be substituted for the air density."

A further discussion of the factors controlling detonation can be found in the original reference. Rothrock and Biermann checked the usefulness of the plot of $R\ P_1/T_1$ against T in knock rating by a series of experiments carried out with a single-cylinder engine. Engine speed and coolant temperature were held constant and the spark advance was adjusted for maximum power under certain standard conditions at each compression ratio. Compression ratio, inlet-air pressure, and inlet-air temperature were chosen as independent variables for investigating detonation with the mixture ratios for maximum power and maximum economy. In each case, the independent variables were adjusted until a certain level of detonation intensity was reached. The detonation intensities used were audible detonation as determined by ear, and incipient detonation as determined by means of the pickup unit from an M.I.T. knockmeter (reference 22) with a cathode-ray oscillograph as the indicating element. Six fuels were investigated over the practical range of each operating variable. The results showed that the proposed method gave consistent results and was suitable for the practical knock rating of aviation-engine fuels.

Rothrock and Biermann made no attempt to apply their results to full-scale aviation engines but they gave the opinion that the observed tendency for the allowable value of the air-density factor to decrease with increasing inlet-air temperature would hold in service engines. Quantitative estimates of the limiting values of output and efficiency were given for several fuels.

Conclusions on the Detonation Problem

The material discussed shows that the factors controlling detonation and the general nature of the phenomenon itself are known.

It is certain that the maximum performance possible with present-day engines is limited by the effects which accompany detonation.

The principal factors controlling detonation in normal operation are combustion-chamber design, compression ratio, conditions in the air-fuel mixture supplied to the engine, and the chemical nature of the fuel.

DESIGN OF EQUIPMENT TO STUDY PRESSURE WAVES AND VIBRATION ACCOMPANYING DETONATION

The measurement of detonation has two practical aspects. It may be sufficient to know that the existing detonation intensity is below some predetermined level, or quantitative information on the intensity level may be required for various conditions of engine operation. The first case arises when it is desired to protect an engine by insuring that the detonation intensity never exceeds an established "maximum allowable limit" during an endurance test or in actual flight. The second case will usually occur as a problem in laboratory tests of fuels or engines. This natural division of the problem leads to two corresponding instrument types:

1. Detonation detectors designed to show whether or not the existing detonation intensity exceeds some established limit

2. Detonation indicators designed to give quantitative information on detonation intensity over a continuous range of levels

The immediate object of the work described in the present report was to study the possibility of designing a detonation detector suitable for use in flight under service conditions.

The advantages of an instrument that could be installed without engine modifications were recognized. On this account it was decided to develop, if possible, a compact vibration pick-up unit for external mounting that would be capable of operating a small electrical indicating unit.

Before intelligent design work could be started on an instrument, it was essential to have quantitative information on the vibration produced by detonation and by mechanical excitations in a service type of aircraft-engine cylinder. In order to obtain this data, a high-speed indicating system was developed for making continuous records over the entire frequency range likely to be encountered in the engine. As a means of separating detonation effects from disturbances caused by mechanical vibration, the apparatus was designed to take simultaneous records from a pressure-sensitive pick-up unit and a vibration-sensitive pick-up unit.

General Features of High-Speed Indicators

In the following treatment, the terms "pick-up" or "pick-up unit" will be used to designate that element of an indicator which is directly exposed to the pressure or vibration to be measured. Vibration-measuring instruments for studying detonation will differ essentially from pressure-measuring instruments only in certain features of the pick-up unit; that is, the elastic system of a pressure indicator will be sensitive to vibration, and the elastic system of a vibration indicator could be used in a pressure indicator. In the following discussion, the two instrument types will be considered together in terms of pressure indicators until a distinction is finally necessary in the form of the pick-up unit.

Equipment for quantitative studies of the pressure disturbances accompanying detonation must meet two main requirements. It must give an accurate representation of pressure changes with components extending from about 5 cycles per second to a high limit at least equal to 15,000 cycles per second, and it must be able to withstand extended periods of continuous operation under severe engine conditions. For convenience in the interpretation of complicated records, the

over-all sensitivity of the apparatus should be substantially constant over the range of operation. Installation will be facilitated if the pick-up unit actually exposed to the cylinder pressures is small and adapted to fit into openings of spark-plug size in the cylinder head.

Electromagnetic generators are simple, rugged, and give a relatively high output with low internal impedance. Such generators produce an induced voltage proportional to the velocity of the diaphragm, which is a definite advantage for studies of high-frequency pressure waves. Another important factor is that thermal deflection effects in the diaphragm are minimized since a rate-of-change indicator does not require an accurate adjustment of the zero position.

Cathode-ray oscillographs have all the characteristics required for recording the pressure variations that accompany detonation. The electron beam does not introduce any difficulties at either high or low frequencies. A high-frequency limit for recording is established, however, by the combination of spot intensity, photographic-emulsion speed, and lens aperture. With modern motion-picture film and a standard cathode-ray tube, the recording problem can be satisfactorily solved by adjustments of anode potential in the tube. The oscillograph system used in the present investigation was essentially a conventional installation.

Amplifiers are required to raise the pick-up unit output voltage to the level necessary for operation of the oscillograph. In practice, the performance of this coupling system established both the high and the low frequency limits for satisfactory operation of the complete indicator. The problem can be considered as solved only if the photographic record is a faithful representation of the rate of change of pressure inside the cylinder. It has been found from experience that the pressure waves accompanying detonation are damped so slightly between cycles that the analysis methods of steady-state theory give satisfactory results.

Selection of the Generator Type for a Rate of Change of Pressure Indicator

A rate of change of pressure indicator having been decided upon, it was necessary to choose between several possible schemes in designing the electromagnetic generator system.

Under the restrictions of size and form imposed by the engine, three generator types are feasible:

1. A cylindrical coil moving perpendicularly to a radial magnetic field, as indicated in figure 2

2. A cylindrical shell of magnetic material located in a radial magnetic field and arranged to shift flux from one side to the other of a stationary coil when moved in the axial direction. The essential parts of such a shell inductor-type generator are shown in the diagram of figure 3.

3. A flat diaphragm of magnetic material so arranged that its motion varies the reluctance of a magnetic circuit in which the flux links a stationary coil. Generators of this type are fundamentally similar in construction to the conventional telephone receiver. The parts of such a generator are indicated in figure 4 and figure 5 shows a large-scale representation of the diaphragm shape produced by a deflection.

The selection of one of the three generator types as the best choice for the indicator problem can reasonably be based on three criteria:

1. Simplicity and ruggedness of construction

2. Voltage output for a given diaphragm velocity

3. Susceptibility to mechanical vibration

Flat-diaphragm generators do not require mechanical attachments to the diaphragm and for this reason are definitely superior to the other two types on the basis of simplicity.

Figure 6 shows curves that compare the output voltages from the shell-inductor generator and the flat-diaphragm generator. In this case, the voltage ratio depends upon the gap length used for the flat-diaphragm generator. The ratio of this gap length to diaphragm radius is taken as the independent variable in figure 6, with the ratio of flat-diaphragm-generator output to shell-inductor-generator voltage as ordinates. For all gap lengths less than about 1/20 the diaphragm radius, the flat-diaphragm unit is seen to be definitely superior. In practice, the gap length will be limited by the necessity of keeping diaphragm deflections small compared with

the gap length in order to prevent distortion between the diaphragm velocity and the voltage output. In pressure-sensitive pick-up units, however, strength and cooling considerations force the use of such heavy diaphragms that the radius-gap ratio can easily reach 100. This consideration means that the flat-diaphragm type of generator is superior to the other two types by a wide margin.

Effect of Vibration on Indicator Performance

Many experiments in the internal-combustion engine laboratory have shown that the moving systems of diaphragm-type high-speed indicators have substantially no damping in operation, which means that mechanical shocks, such as valve closings, can cause transients in the diaphragm which complete many cycles at the natural frequency of the indicator after each excitation. Also, if the natural frequency of the indicator is near the forcing frequency owing to detonation, the indicator records will be distorted by resonance-curve effects and by large transients following the initial shock. This situation can be improved by the use of electrical filters but such a procedure obviously makes it impossible to obtain a true picture of all the effects produced by detonation. A number of attempts were made to introduce damping in the diaphragm system but, with the small motions available, the results were unsatisfactory. The remaining possibility of eliminating natural-frequency effects from the records of a high-speed indicator is to use a sufficiently high natural frequency.

Natural-frequency vibrations in indicators will be excited for the most part by sudden mechanical displacements of the diaphragm boundaries. Thereafter, vibration in the supporting structure will act more in the manner of a steady-state forcing motion than a source of transients. The factors controlling the magnitude of transients in an indicator can therefore be conveniently studied by the use of a motion that starts from rest, produces a displacement ζ_{am} in a time τ_f and thereafter maintains this displacement. Such a motion can be approximated by a half cycle of the cosine function, as shown in the diagram of figure 7. The speed with which the displacement occurs can be varied by changing the half period π/ω_f. An equivalent system is indicated in figure 8 where the motion of the mass is taken as the motion of the center of the diaphragm and the motion of the upper end of the spring is taken as the motion of the edge of the diaphragm.

The motion of the center of the diaphragm under the forcing motion of figure 7 is given in figure 9 for two values of the ratio $\bar{\beta} = T_n/2\tau_f$ where T_n is the natural period of the diaphragm and τ_f is the length of time required for the applied displacement to be completed. The analysis was carried out for an undamped system since the effect of damping in the actual diaphragm would not be appreciable during the first few cycles. For $\bar{\beta} = 0.5$, the transient amplitude is a considerable fraction of the forcing motion and, for $\bar{\beta} = 0.1$, the transient amplitude is reduced to about 1 percent of the forcing displacement. In practice, only the motion of the center of the diaphragm with respect to the edges can affect the electrical output from a pick-up unit; so the relative motion rather than the absolute displacement is important. Figure 10 shows this relative displacement for the cases illustrated in figure 9. It is apparent that the mechanical transient effects will be much smaller for $\bar{\beta} = 0.1$ than for $\bar{\beta} = 0.5$. Figure 11 is a plot showing the amplitude of the mechanically excited transient as a function of $\bar{\beta}$. For values of β smaller than 0.4, the transient amplitude is relatively small but increases rapidly for larger values of $\bar{\beta}$. This curve makes it evident that mechanical transient effects can be substantially eliminated by using a sufficiently small value of $\bar{\beta}$. With no analytical method for determining the time interval corresponding to τ_f, it is necessary to find by experiment the natural frequency required in the elastic system of a pressure pick-up to enter the range of $\bar{\beta}$ values, which substantially eliminates natural-frequency disturbances. The general requirement is merely that the natural period of the indicater system must be short compared with the time in which the exiting displacement takes place. An additional benefit from this use of a high natural frequency is that, since the transient which actually occurs is damped about the same amount per cycle, a smaller time is required for the transient to disappear as the natural frequency is increased.

The shock due to the sudden pressure rise of detonation is known to occur in less than 0.001 second; so the argument outlined demonstrates the need for a high natural frequency in the elastic system of an indicator to record detonation effects. The sensitivity of the instrument (expressed as diaphragm deflection per unit applied pressure), however, will decrease as the elastic coefficient of the diaphragm increases. It is therefore desirable to use the smallest elastic coefficient possible in a diaphragm strong enough to withstand the pressures of engine operation. Combining the

natural frequency and strength requirements, it is obvious that the best arrangement is the one which produces the highest possible natural frequency for a given elasticity. In general, the natural frequency of any simple system will be proportional to the square root of the ratio of the elastic coefficient to the effective mass. For a diaphragm, the elasticity will depend upon linear dimensions and the effective mass will depend on both the size and the mass attached to the center of the diaphragm. Obviously, the natural frequency of a plain diaphragm will be higher than that for the same diaphragm with a coil form or inductor attached. The results of a quantitative study of this phase of the problem are given in figure 12. The ratios of flat-diaphragm frequency to frequency for the other types are taken as ordinates and diaphragm radius to thickness as abscissas. In any actual unit, the diaphragm radius will probably be at least seven times the thickness; so a reduction of natural frequency to less than one-half that for a flat diaphragm can be expected with either the shell-inductor or the moving-coil generator types as compared with the flat-diaphragm type.

Diaphragm Theory

Figure 13 is a plot of the elastic coefficient for steel diaphragms of one-half-inch diameter expressed as a function of thickness. The half-inch diameter is chosen because it is the largest practical size for indicators to fit into openings designed for conventional 18-millimeter spark plugs.

Figure 14 shows plots of natural frequency as a function of thickness for steel diaphragms of different diameters with either the first or the second modes excited. A diaphragm one-half inch in diameter and 0.060 inch thick will have a natural frequency in the lowest mode of about 95,000 cycles per second.

Figure 15 shows the results of derivations plotted with the ratio of relative-motion amplitude to forcing-motion amplitude as ordinates and ratios β [(forcing frequency)/(natural frequency of diaphragm)] as abscissas. It will be noted that each point on the exact-theory curve is higher than the corresponding point of the equivalent-system curve. The constant ratio of 1.62 that appears from elastic theory considerations has been independently checked by two methods.

Motion of a diaphragm subjected to a sinusoidally varying pressure was studied and the results are summarized in

figure 16, in which the ratio of actual relative motion between the edge and the center of the diaphragm to this same relative motion at zero frequency is plotted as ordinates and values of the variable β as abscissas. In this case, there is no difference between the results of the exact theory and the equivalent-system theory. The plotted curve shows that, for low values of β, the diaphragm deflections will be equal to those for static conditions but that amplitude distortion will occur as the forcing frequency approaches the diaphragm natural frequency.

Diaphragms are sensitive to both pressure and vibration according to known equations. It is therefore possible to establish a relationship between the pressure amplitude and the vibration amplitude necessary to produce the same relative motion between the edge and the center of the diaphragm at a given frequency. This problem has been treated with the following result:

$$\zeta_{am}/P_{vm} = \frac{3\ (1 - \sigma^2)\ a^4}{(1.62)\ (16)Eh^3\ B^2} \tag{1}$$

where

ζ_{am} amplitude of vibration at frequency ν_f applied to edge diaphragm

P_{vm} amplitude of sinusoidal pressure variation of frequency ν_f that will produce the same diaphragm deflection as the vibration amplitude ζ_{am}

σ Poisson's ratio ($\sigma = 0.28$ for steel)

E modulus of elasticity ($E = 30 \times 10^6$ lb/sq in. for steel)

a radius of diaphragm

h thickness of diaphragm

$\beta = \nu_f/\nu_n$

ν_n natural frequency of the diaphragm vibrating in the first symmetrical mode

For steel diaphragms the relation becomes

$$\zeta_{am}/P_{vm} = (0.356)\ (10^{-8})\ (a^4/h^3)\ (1/\beta^2) \qquad (2)$$

THE EFFECT OF TEMPERATURE ON A FLAT-DIAPHRAGM GENERATOR

Mechanical and electrical aspects of the flat-diaphragm generator have been considered without regard to the effects of temperature. These effects may take several forms:

1. Damage to the insulation
2. Damage to connections
3. Increase in resistance of the winding
4. Decrease in the elastic coefficient of the diaphragm due to a change in the modulus of elasticity
5. Change in magnetic permeability of the diaphragm
6. Deflection of the diaphragm due to uneven expansion between inner and outer surfaces under thermal gradients

Temperature estimates based on temper colors of the diaphragm, thermocouple measurements, and occasional damage to soldered connections have shown that, under severe conditions the diaphragm and coil system is subjected to temperatures between 350° and 500° F. These values are certainly near the practical upper limit of resistance for enamel insulation. With carefully wound coils, however, pick-up units have been used for 25 to 50 hours in engine tests without indications of failure. Difficulties have usually been due to shutting off the air blast on air-cooled cylinders too soon after stopping the engine. Soldered connections have been damaged in this way, a source of trouble that can be eliminated by the use of solder with a higher melting point.

Pick-up units are always connected in series with a resistance many times greater than the winding impedance in order to obtain proper electrical characteristics. In such a circuit, any resistance changes due to thermal effects in the winding will have a negligible effect on performance of the system.

Elastic properties of a diaphragm depend upon Poisson's ratio and the modulus of elasticity. Both of these fundamental properties vary with temperature. Figure 17, taken from reference 23, shows the magnitudes of these variations for a steel similar to that used in constructing the pick-up units. With the estimate of operating temperature about 500° F, it is seen that the maximum variation in the modulus of elasticity will be about 10 percent and the change in Poisson's ratio will be somewhat greater. These changes will correspond to about a 10-percent change in the elastic coefficient of the diaphragm system with about half of this change in natural frequency.

In a flat-diaphragm generator, the diaphragm necessarily carries the working flux so that any change in permeability of the diaphragm material will be reflected as a change in reluctance of the magnetic circuit. The curve of figure 18 taken from reference 24 shows that, over the temperature range involved, the permeability of a steel diaphragm will decrease but not by a large percentage. In a practical design, the diaphragm reluctance will be small compared with the air-gap reluctance, so that the net effect of temperature on total flux in the circuit will probably not be serious.

Temperature gradients in the diaphragm will necessarily exist under working conditions. These gradients produce a measurable but indefinite effect on the air-gap length. With the over-all sensitivity dependent upon the equilibrium-gap length, it follows that thermal effects in the diaphragm will affect the performance of the pick-up unit. This difficulty can be reduced by using a longer equilibrium gap but this method is undesirable because the pick-up sensitivity is also reduced. No quantitative estimate of the effect of thermal deflections on indicator operation can be made from the data now available.

The foregoing discussion has shown that thermal effects on indicator sensitivity are too large to be neglected and are difficult to estimate analytically. This state of affairs leaves calibration under actual operating conditions in the engine as the only reliable method for accurately determining the over-all sensitivity of an electromagnetic indicator.

Complete Pick-Up Unit

Several models of electromagnetic pick-up units were constructed and tested in order to establish reasonable solu-

tions for the design problems that could not be treated by analysis. Two types of these preliminary models have been described in reference 14. Figure 19 is a cross-sectional diagram of the pressure-sensitive pick-up unit designed for use in air-cooled aircraft engine cylinders. The permanent magnet of Alnico supplies flux to the air gap through the cold-rolled-steel core. The magnetic circuit is completed through the diaphragm, the external shell, and the retaining head. All these parts are of cold-rolled steel. The clamping nut holds the magnet and the pole piece tightly against a shoulder in the shell through a bronze disk. The assembly is prevented from turning during assembly by the pin and is finally locked by means of the screw. An aluminum collar with a tapered internal hole serves to prevent longitudinal vibrations of the pole piece and to protect the generating coil from excessive temperatures. This collar is slightly crushed during the process of assembly to insure intimate contact with the inner and the outer surfaces. The turns of the generating coil are rigidly held in place between a shoulder on the disk and the retaining collar by means of a special baking enamel. The generating coil is connected to the external terminals by means of the wires. The electrical system is completely insulated from the metal parts.

It was found by experiment that a diaphragm 0.5 inch in diameter and 0.060 inch thick (which gives a natural frequency of about 95,000 cycles per second) eliminated transient excitation effects in the indicator and had sufficient strength to operate indefinitely under engine conditions.

Figure 20 is a cross-sectional diagram of the experimental vibration pick-up unit designed for external attachment to the cylinder head. In this case, the external shell is a permanent magnet of cobalt steel and supplies flux to the air gap through the cold-rolled-steel core and the diaphragm. The generating coil is mounted on the core in a manner similar to that used in the pressure-sensitive pick-up unit. Insulated connections are carried out to a bakelite terminal block which mechanically supports the external wires leading to the amplifier system. A cold-rolled-steel nut serves to clamp the generating system rigidly together. The pick-up unit is mechanically connected to a boss on the engine cylinder head by means of the bronze fitting and the bronze nut. The diaphragm used in this unit was 0.03 inch thick and 0.5 inch in diameter, which gives a natural frequency of slightly over 45,000 cycles per second.

It was found that the output voltages available in practice from both types of pick-up unit ranged from 0.001 to 0.1 volt with full-scale deflection desired on the oscillograph.

Cathode-Ray Oscillograph and Recording System

Three component units are required for a complete cathode-ray recording system: a cathode-ray tube, a power supply for the tube, and a camera designed for continuous film motion. Visual inspection of the oscillograph trace requires the addition of a sweep oscillator to supply the time axis. The first of these required components was available as a commercial article, and the others were specially adapted to the work at hand.

Commercial cathode-ray tubes specifically designed for photographic recording at high spot speeds were obtained. After an extended trial of tubes having 3-inch and 5-inch screens, it was decided to use the RCA type 907 tube with a 5-inch screen. This decision was based on the smaller ratio of spot diameter to spot deflection and the greater spot intensity available with the larger tube. The spot intensity was found too low for satisfactory recording at the highest spot speeds encountered when the recommended anode potential of 2,000 volts was used. In practice, this anode potential was increased to 3,000 volts to give satisfactory results. Other controlling potentials of the tube were adjusted to limit the power dissipated by the screen to a noninjurious level. With this accelerating potential, a voltage swing of 660 volts on the deflecting plates was necessary to produce the full-spot motion of 4 inches.

Potentials for the cathode-ray-tube elements were furnished by a power supply especially designed for this application. A feature of this unit was the use of a General Radio Variac on the primary of the high-voltage transformer to control the focusing and accelerating anode potentials. The circuit diagram of the two cathode-ray tubes and the power supply is given in figure 21. Transformers with special high-voltage insulation and low interwinding capacity were used, which were especially built by the Raytheon Manufacturing Company. The total range of anode potentials available from the unit was 0 to 6500 volts. Anode potential was read by a voltmeter incorporated as a permanent part of the unit.

A sweep oscillator was used to supply a time axis for visual inspection of the cathode-ray trace before making photographic records. This unit was built as part of the power-supply assembly. The electrical circuit of the sweep oscillator is that recommended by the cathode-ray tube manufacturer. (See reference 25.) The circuit is shown diagrammatically in figure 22.

Photographic records were taken on 35-millimeter motion-picture film with a camera already available. This camera had been used for making the flame photographs described by Bouchard and his collaborators in reference 26. A film speed of 400 inches per second permitted accurate measurements of frequencies below about 15,000 cycles per second and the identification of frequencies up to 50,000 cycles per second.

The two cathod-ray tubes were mounted side by side with their axes vertical. The fluorescent screens were placed with the rounded edges of the glass in contact. The distance between the camera and the tube faces was adjusted so that a 4-inch deflection of the spot produced a 1/2-inch image on the film.

Satisfactory photographic density for observations from the negatives with about three-quarters of the maximum swing was obtained; a lens aperture of 1.9 and 3000 volts anode potential were used.

Amplifiers

From the output of the pick-up unit, it was assumed that for average conditions an instantaneous potential of 0.01 volt would be available as input to the amplifying system. The cathode-ray tubes required a swing of 660 volts for full-spot deflection. From these data, it was estimated that the amplifiers should produce an over-all gain of about 10^5. A safety factor of 10 was introduced and the goal in the amplifier design was placed at a gain of 10^6.

In order to meet the requirements of accurate records over the entire range of frequency components encountered in engine work, the amplifiers were designed for a sensitivity variation of less than 5 percent from 5 to 40,000 cycles per second. The allowable time delay for the complete system was placed at less than 10^{-5} second in any part of the frequency range.

Vacuum tubes capable of producing a high amplification are not well suited to a large swing in output voltage. For this reason it was found necessary to divide the amplifiers into two sections, one to give a high-voltage amplification with a normal-output voltage swing and the other to produce the output-voltage range required to cause full-scale deflection of the cathode-ray spots. Figure 23 shows the single triode stage used as the high-voltage amplifier. The output terminals were connected to the cathode-ray-tube deflecting plates and the input terminals were connected to the high-gain amplifier. A special power supply was used for the high-voltage section, as shown in the diagram of figure 24. The direct-current output potential of this unit was about 1200 volts.

Figure 25 is a circuit diagram of the high-gain amplifier. This unit was designed with resistance-capacitance interstage coupling in accord with the conventional principles of amplifier design (reference 27). Pentode connections were used for the first two stages because the characteristic low interelectrode capacity was favorable to a wide frequency response. The third tube was connected as a triode because it was impossible to obtain a sufficiently great undistorted voltage swing with the pentode arrangement. "Decoupling" circuits between stages were required to permit operation of the complete amplifier from a common plate battery. The condensers and resistors used in the decoupling circuits were adjusted to compensate for the normal decrease in sensitivity and phase distortion at low frequencies. A precision wire-wound attenuator was placed between the first and the second stages.

INDICATOR CALIBRATIONS AND ENGINE TESTS

The process of calibration of the indicator consisted of two parts:

1. A demonstration that the electrical sensitivity of the complete system is independent of frequency over the required range

2. An over-all calibration of the indicator by comparison of the integrated curve from a rate of change of pressure card with a pressure card recorded simultaneously by means of an accurate pressure indicator

Integration from an enlarged dP/dt record was used in the second step because this process produced more consistent results than a direct comparison of the oscillograph trace with the necessarily somewhat uncertain slope from a pressure card. The integrated curves were similar in shape to the pressure cards except for inaccuracies in the low-pressure regions. Calibration constants were determined by combining the enlargement factors required to make an integrated curve coincide with its corresponding pressure card.

Firing cycles in the CFR engine were used for the first calibration runs with pressure cards from the M.I.T. point-by-point indicator for comparison purposes. Troublesome uncertainty was introduced, however, by the fact that the engine cycles were not identical even with the most careful control of conditions. This variation produced a spread of points on the combustion line of the pressure cards and differences between cycles in the dP/dt record. It was impossible to associate a particular dP/dt record with a definite line on the pressure card, and considerable uncertainty was therefore introduced in the calibration. Trials using pressure cards taken without firing the engine gave measured sensitivities substantially equal to those found from firing cycles. These results could be closely checked since there were no measurable differences between successive cycles. From this evidence, it was concluded that the inaccuracies which would be introduced by calibrations carried out under improper temperature conditions would be no greater than the uncertainties due to variations between firing cycles in the engine. With no advantage to be gained by calibrating under engine conditions, it was decided to construct a calibrating machine without provision for firing cycles. This machine consisted of a special high-compression cylinder mounted on a two-cylinder motorcycle engine driven by an electric motor. The rate of change of pressure available from a given motor speed was increased by using a compression ratio of 12:1.

Vibration calibrations could have been carried out with the aid of a mechanical system capable of subjecting the pick-up unit to a known amplitude and frequency of motion. With the particular sensitivity characteristic designed into the vibration unit, a special calibrating machine would have been required. A simpler procedure in the present case was to expose the diaphragm of the vibration-sensitive pick-up unit to pressures in the pressure-type calibrator and to convert the pressure sensitivity thus determined into vibration sensitivity. It would be very desirable to check the results of this procedure by a direct vibration calibration at some future time.

Electrical Calibration

Electrical calibrations of the amplifier-oscillograph system were carried out by means of a General Radio beat frequency oscillator capable of covering a range from 5 to 40,000 cycles per second. Voltages from the oscillator were applied to the amplifiers by means of a precision drop-wire arrangement. Root mean square values of the input were measured with the voltmeter incorporated in the oscillator. Figure 26 shows the results from electrical calibrations of the amplifier-oscillograph systems alone, taken before and after the equipment had been used for tests during 10 hours of engine operation. Numerical data and a block diagram of connections are given on the figure.

Pick-up units introduce modifications in the electrical properties of the input circuits. Inductance is present in the generating coils and there is always some capacity in the connecting leads, especially if long lengths of wire are required. The resulting changes in impedance will usually have negligible effects at low frequencies, but it is always desirable to make final electrical calibrations with the pick-up unit connected to the input terminals through the wire to be actually used in engine tests. Figure 27 shows the results of such a calibration for the pressure unit and the vibration unit connected to amplifier channel 1 and amplifier channel 2, respectively. It is apparent that the sensitivity of both units is substantially constant up to about 15,000 cycles per second. For higher frequencies, the pressure-sensitive system falls off rapidly in sensitivity; whereas the vibration-sensitive system is only about 20 percent less sensitive at 40,000 cycles per second than it is at low frequencies.

Over-All Calibration of Indicators

Tests with preliminary models using cobalt steel for the permanent-magnet material showed a continuous slow reduction in sensitivity of pressure-type units due to operation in the engine. During about 60 hours of test operation, the general design of the units was found to be satisfactory. These earlier units had the length of threads equal to one-half inch as required for the CFR engine and consequently did not locate the diaphragm flush with the combustion-chamber wall in an air-cooled cylinder. The pressure-sensitive unit of figure 19 was designed with an Alnico magnet to reduce variations in magnetizing force and incorporated certain other features dictated by conditions in the Wright Cyclone cylinder. After

some 10 hours of operation in the Wright cylinder, it was decided to make a controlled series of tests to determine quantitatively the effect of use on the indicator sensitivity. These tests included both the pressure- and vibration-sensitive units and were divided into three parts:

1. Pressure calibrations in the special compression cylinder

2. About 10 hours of test operation in the Wright Cyclone cylinder, during which the records shown later in the present report were taken

3. Pressure calibrations reproducing part 1

Contact prints from the oscillograph records taken before and after the engine tests with the pressure-sensitive unit are shown in the upper pair of films of figure 28. Corresponding records for the vibration-sensitive unit are given in the lower pair of films.

Figure 29 shows the result of integrating dP/dt records from the pressure unit. The direct-pressure line as drawn fits the experimental curve from the M.I.T. point-by-point indicator. It is apparent that the points resulting from graphical integration of the oscillograph records give substantially the same card shape as the pressure indicator. No essential difference in sensitivity before and after the engine tests was observed.

Calibration results from the vibration-sensitive unit are given in figure 30. As in the case of the other pick-up unit, the sensitivity was not affected by 10 hours of engine operation.

ENGINE INSTALLATION

Evidence accumulated during several years of work on detonation has shown that the conditions encountered in aircraft-engine cylinders are quite different from those found in laboratory engines such as the CFR engine. It was therefore decided before starting the present research that any valid conclusions would have to be based on tests made with a full-scale air-cooled engine cylinder. As a contribution to the detonation-research project, the Wright Aeronautical Corporation furnished a single-cylinder Wright Cyclone engine (model 1820-G) for the test work.

The single-cylinder Wright Cyclone was installed in the M.I.T. internal-combustion engine laboratory. The power output was absorbed by a Froude hydraulic dynamometer. Cooling air was supplied by a centrifugal blower. Fuel was injected into the intake manifold near the inlet valve by a standard Bosch pump. The injection nozzle was of a special design developed at M.I.T. Air for the engine was supplied by the laboratory compressor.

A pressure drop of 8 inches of water was maintained across the standard Cyclone baffles used around the cylinder. Cylinder-head temperatures were measured under both the front and the rear spark plugs by standard washer-type thermocouples connected to a direct-reading meter.

Engine Conditions

Detonation is a serious problem in aircraft engines under two conditions of operation, take-off and cruising. During take-off, the maximum power output is required without particular regard to fuel economy. For cruising, the lowest possible specific fuel consumption is important. These two types of operation were selected for particular study during the instrument tests.

Under normal engine conditions, a gear-driven supercharger will heat the intake air approximately 100° F. Cooling due to evaporation of the fuel will reduce this value by about 50° F so that, with an outside-air temperature of 70° F, the actual intake to the cylinder will be at about 120° F. This condition was approximated in the single-cylinder engine by heating the intake air to a temperature between 170° and 180° F before the fuel was added.

During the calibration runs, the engine was operated with the mixture as lean as possible for safe head temperatures or freedom from detonation. For speeds in excess of 1800 rpm, the head temperature was usually the controlling factor. As take-off conditions were approached while using 87 octane fuel, it was impossible to stop detonation even by the use of very rich mixtures. In these cases, the mixture was made as lean as possible for a limiting head temperature of 400° F. Figure 31 shows the general performance characteristics of the single-cylinder engine over the range of speeds and manifold pressures used in the laboratory.

Certain points spotted on the general field of operation correspond to conditions used for various intensities of detonation. With no other method available, these intensities were based on qualitative judgments of the amount of characteristic detonation present in each case. The general noise level near the engine was relatively low so that this procedure gave results which could be repeated with reasonable certainty.

Detonation Tests

A complete series of runs was carried out to demonstrate the operation of the indicators over a range of engine conditions and to determine the vibration effects available for operation of detonation-sensitive instruments. Interest was centered in the possibility of constructing a "detonation detector" for use in flight and the experiments were arranged to demonstrate the performance of the externally mounted vibration-sensitive indicator. Records from the pressure-sensitive pick-up were included in every case to prove the ability of the unit to withstand considerable periods of engine operation and to furnish an approximate check on the effect of pressure waves inside the combustion chamber in causing cylinder-head vibration. No method of separating components of the record displacements due to pressure from the components due to mechanical vibration was available. For this reason, no attempt was made to use the results for a quantitative analysis of the pressure-wave phenomena.

Figure 32 is a top view of the cylinder showing the pressure-sensitive unit mounted in one of the regular spark-plug holes. The spark plug was placed in a special hole between the indicator and the intake valve. Figure 33 shows the vibration-sensitive unit of figure 20 as it was installed just below the rear spark plug of the engine. Fortunately, a boss with a tapped hole designed for use in clamping thermocouple wires is located at this place in the standard Cyclone cylinder. The only modification necessary was to enlarge this hole and to insert a bronze bushing, which in turn was tapped for the 1/4-28 thread of the attachment fitting of the pick-up unit.

Specifically, the engine tests with the indicator equipment were designed for three general purposes:

1. To prove the ability of the equipment to perform satisfactorily over a reasonable period of operation in an air-cooled aircraft-engine cylinder

2. To determine the characteristics of cylinder-head vibration produced by valve events and the manner in which this vibration is affected by engine speed and supercharging

3. To determine the general features of cylinder-head vibration produced by detonation at various intensity levels

The oscillograph records taken during the engine tests are shown as four groups of contact prints in figures 34 to 37. A brief summary of the essential information for these runs follows:

Figure	Engine speed (rpm)	Octane rating of fuel	Manifold pressure (in. Hg abs.)	Mixture	Detonation
34	Varied	87	26	Rich	None
35	1900	87	Varied	do	Do.
36	1900	87	36	Varied	Varying
37	2100-2400	Varied	48-50	Rich	Do.

Details of the engine conditions for each case are given in table I. It was very difficult to obtain a precise adjustment of speed or load with the dynamometer used and, since small variations in these quantities were not important for the purpose at hand, no great effort was expended to maintain exactly constant conditions.

The records of figures 34 and 35 were taken to determine the effects of speed and supercharging without detonation. The runs of figure 36 correspond roughly to cruising conditions in a full-scale engine and show the increase of detonation intensity as the mixture is changed from rich to lean. Conditions approximating those for take-off power existed while the records of figure 37 were taken.

DISCUSSION OF INDICATOR RECORDS

General

One striking feature of the indicator records displayed in figures 34 to 37 is that strong vibration does not appear

throughout the cycle but occurs in sharply defined "bursts," which soon start to decrease in amplitude. This behavior proves that the corresponding motion of the cylinder head consists of a series of transients due to various sources of excitation. For example, consider the upper pair of records in figure 37 taken with a fuel of 87-octane rating under take-off conditions. The upper record of the pair is the trace from the pressure-sensitive pick-up unit exposed to the combustion-chamber gases which was, of course, also affected by vibrations of the cylinder wall. The lower record of the pair was produced by the oscillograph connected to the externally mounted vibration-sensitive pick-up unit. Starting from the left-hand side of the record, the instant of the ignition spark is marked by the first of a series of small "jogs" in the line. Top dead center on the firing stroke has been identified from a knowledge of engine speed and the spark advance. Shortly after top center, a series of strong oscillations is produced by detonation which persist during most of the expansion stroke. The portion of the cycle in which these oscillations occur, when detonation is present, will be referred to in the following discussion as the "detonation period" of the cycle. There is no definite evidence of exhaust-valve opening at 69 crank degrees before bottom center but the exhaust closing at 36° after top center is plainly visible. Inlet-valve opening at 5° before top center is not visible but inlet closing at 48° after bottom center has a definite effect on the records.

After this last valve event, the combustion-chamber wall is substantially free from vibration until detonation occurs in the next cycle. It is apparent that the records from the vibration-sensitive unit are, in general, identical with those from the pressure-sensitive unit as far as general features are concerned.

Several hundred engine cycles with various conditions were recorded and examined during the course of the work described in the present report. It was a universally true observation that considerable variation appeared in the vibration trains produced by detonation in successive engine cycles. For obvious reasons, a large number of records could not be included for inspection but the lower three pairs of traces in figure 36 illustrate typical differences between detonation effects in successive cycles. These cyclical variations make it necessary to express in terms of averages or trends any conclusions that may be drawn from indicator records. This fact will be kept in mind during the following discussion of results.

In general, the effects of detonation on traces from the pressure-sensitive unit are more marked than the corresponding effects on records from the vibration-sensitive unit. This result is to be expected because the pressure-sensitive unit is directly acted upon by the pressure waves, which are strong enough to force the whole cylinder head to vibrate. The valve events are also more pronounced on the pressure-unit traces than on the vibration-unit records. It is interesting to note that the presence of vibration effects in the output from the pressure-sensitive unit would probably not impair the performance of this unit as a pressure-indicating device if some system of electrical integration could be used. Since the present pressure unit has shown its ability to work consistently over long periods of engine operation, there seems to be a good possibility of developing a useful pressure indicator with the present pick-up unit as the sensitive element.

Throughout the entire series of records, the valve events were characterized by somewhat complicated damped vibrations that could be resolved into two principal frequency components. One of these components was too high for accurate measurement but appeared to be included in the range between 40,000 and 50,000 cycles per second. This frequency might well be the natural frequency of the vibration-sensitive unit with its diaphragm of 0.030-inch thickness but the thickness of the diaphragm in the pressure-sensitive unit was 0.060 inch, corresponding to a natural frequency of 95,000 cycles per second. Actually the 40,000-cycle-per-second vibration was less pronounced on the pressure-unit records but this result might have been due to the reduced sensitivity of the pressure unit at this frequency, as shown by the curve of figure 27. Whether or not the 40,000-cycle-per-second component has a real existence in the combustion-chamber wall is of no importance, since it can easily be excluded from an indicating system by proper design. The second prominent vibration component excited when the valves close has a frequency near 10,000 cycles per second. It will appear later that the presence of this component introduces a serious difficulty in the design of a detonation detector.

The records of figures 36 and 37, which show detonation, have rather complicated oscillations in the detonation zone. It is certain, from a more or less erratic tendency to form beats, that frequency components in the same range are present. A minor component of the high frequency mentioned in the last paragraph also runs through most of the records. On account of the nature of the records, no precise estimates of

frequency were possible but the general frequency range of the more prominent components could be found by means of a magnifying glass and a scale. Frequencies determined in this way are marked on each of the records showing detonation. A general survey of the data given in this way shows that deto-
nation. A general survey of the data given in this way shows
that detonation was characterized by frequencies in a range roughly limited by 6500 and 15,000 cycles per second. There seems to be a tendency for the vibration-sensitive unit to show lower frequencies than the pressure-sensitive unit. This effect could be apparent owing to inaccuracies in measurements, or it could be due to a tendency of the combustion-chamber wall to resonate at the lower frequencies. A further examination of this matter would be interesting but not particularly important in the design of a detonation detector that must operate on whatever frequency may actually be present.

Although unknown vibration effects and the complexity of the traces prevent an accurate calculation of the pressure-wave amplitudes from the records, it is interesting to make an estimate of maximum pressure change in the waves associated with detonation. As an illustration of the general procedure, the record taken under take-off conditions with 87-octane fuel will be considered (Record No. D34 from fig. 37). As measured from the trace, the amplitude was about 0.2 inch and the most prominent frequency was about 11,000 cycles per second.

If it is assumed that a pressure variation has the form of a simple sinusoidal wave, the instantaneous pressure can be expressed as

$$P = P_a \sin \omega_f t \tag{3}$$

where

P_a amplitude of the pressure change

$\omega_f = 2\pi \nu_f$

ν_f frequency of the pressure variation

From equation (3), the rate of change of pressure will be

$$\frac{dP}{dt} = \left(\frac{dP}{dt}\right)_a \cos \omega_f t = P_a \omega_f \cos \omega_f t \tag{4}$$

The expression for dP/dt in terms of indicator settings is given in figure 29 as

$$\frac{dP}{dt} = S\ KV\ A\ d \tag{5}$$

where

S sensitivity constant (given in figs. 29 and 30)

KV anode potential of cathode-ray tube, kilovolts

A multiplying factor determined by attenuator setting of the amplifier (the attenuator setting)

d deflection measured on the oscillograph trace, inches

A combination of equations (4) and (5) gives the expression for pressure amplitudes in terms of displacements on the records as

$$P_a = \frac{S\ KV\ A}{\omega_f}\ d_a \tag{6}$$

In this equation, d_a is the amplitude of the vibration as measured directly on the film.

The essential data for detonation record D34 are

$$S = (3.2)\ (10^4)\ \frac{(\text{lb/sq in.})/\text{sec}}{(\text{in.})\ (\text{KV})}$$

KV = 3 kilovolts

A = 50

$\omega_f = 2\pi\ (11{,}000)$ radians/second

d_a = 0.2 inch

Substituting these data in equation (6) gives an approximate value for the pressure amplitude as 15 pounds per square inch. This amplitude has the same order of magnitude as the pressure amplitudes found by Draper (reference 14) for severe detonation in the CFR engine and therefore appears to be reasonable.

Effect of Speed on Mechanically Excited Vibration

Combining equation (6) with equation (2) gives an expression for mechanical vibration amplitudes in terms of oscillograph deflections

$$\zeta_{am} = 0.356 \times 10^{-8} \frac{a^4}{h^3} S \ KV \ A \frac{d_a}{\beta^2 \omega_f} \tag{7}$$

For the pressure-sensitive unit with $a = 0.25$ inch and $h = 0.060$ inch, the vibration-sensitivity equation is

$$\zeta_{am} = 0.64 \times 10^{-7} S \ KV \ A \frac{d_a}{\beta^2 \omega_f} \tag{8}$$

The diaphragm diameter for the vibration-sensitive unit is identical with that for the pressure-sensitive unit but the thickness was reduced to 0.030 inch so that the equation corresponding to (8) is

$$\zeta_{am} = 0.515 \times 10^{-6} S \ KV \ A \frac{d_a}{\beta^2 \omega_f} \tag{9}$$

These expressions can be used to estimate the maximum amplitude of the vibrations excited by valve events. If record D23 of figure 34 is taken and exhaust-valve closing is selected as an example, the record amplitudes are about 0.11 inch and 0.07 inch for the pressure-sensitive unit and the vibration-sensitive units, respectively. In both cases, these amplitudes are for the lower-frequency component of 10,000 cycles per second. With the given indicator conditions, the vibration amplitude at the pressure-sensitive-unit location was found to be about 0.0005 inch and, at the vibration-sensitive unit, the amplitude was about 0.0002 inch.

Examination of the three records of figure 34 shows that the detonation period is substantially free from vibration in all cases. The disturbances due to valve events become greater as the engine speed is increased. Changing the engine speed from 1600 to 2200 rpm caused an increase in the amplitude due to valve events of about five times. The frequency of vibration was not affected by the change in speed. These results are to be expected because the frequency will be determined by the cylinder-head structure and the amplitude of

vibration will depend upon the speed with which the values strike their seats.

Effect of Supercharging on Mechanically Excited Vibration

Figure 35 is a display of three records taken at approximately cruising speed (1900 rpm) with the intake manifold pressure varied from 26 to 44 inches of mercury absolute. It is apparent that this change in supercharging did not affect the vibration due to valve events in any essential way. This result is fortunate since the effect of changing output at constant engine speed will not need to be considered in designing equipment for measuring detonation.

Effect of Varying Detonation Intensity

The records of figure 36 were taken with engine conditions similar to those of normal cruising operation. The mixture ratio was varied from rich to lean to obtain four detonation intensities as judged by ear. With no detonation, the records were similar to those already discussed in connection with mechanical-vibration effects and showed practically no vibration during the detonation period.

Incipient detonation was judged as the point at which the characteristic sound occurred irregularly with the minimum audible intensity. In this case vibrations appear on both records during the detonation period but the amplitudes are definitely less than the amplitudes due to valve events.

Medium detonation was characterized by sounds clearly audible in a substantial number of the cycles. The records show more vibration than for incipient detonation with the maximum amplitude approximately equal to the amplitude produced by valve events.

Heavy detonation was accompanied by sounds of considerable intensity easily audible over the general noise level at some distance from the engine. In this case, the detonation period has vibration with a greater maximum amplitude than that for valve events, which continues for a definitely longer time than the mechanically excited disturbances.

A semiquantitative survey of the situation is outlined in the following tabulation of data taken from the test records. The voltages given refer to output measured at the

terminals of the externally mounted vibration pick-up unit under cruising conditions.

TABLE II

Detonation intensity judged by ear	Maximum voltage swing during the detonation period	Maximum voltage swing due to valve events
None	0	0.06
Incipient	.03	.06
Medium	.07	.06
Heavy	.12	.06
Severe (take-off conditions with 87-octane fuel)	.40	.08

Record D34 of figure 37 shows the effect of take-of conditions on vibration in the detonation period. In this case, the characteristic noise was of almost painful intensity near the engine. The vibration due to detonation is much greater than that caused by mechanical effects both in amplitude and in the number of cycles before damping out.

The lower pair of records in figure 37 show that the use of 100-octane instead of 80-octane fuel for take-off conditions had the effect of reducing severe detonation to a level approximating that of incipient detonation under cruising conditions.

Conclusions Concerning Detonation Indicator

The experiments lead to the following conclusions:

1. The indicators described will withstand engine operation for a considerable period of time and produce consistent results under any conditions likely to be encountered in use.

2. Vibrations due to mechanical excitations and to pressure waves within the combustion chamber are recorded by the pressure-sensitive indicator when the pick-up unit is screwed into an opening in the cylinder head.

3. Vibrations in the cylinder head are produced both when the valves seat and when detonation occurs and these vibrations can be recorded by means of a sensitive vibration pick-

up unit rigidly attached to the outside of the cylinder head.

4. Detonation and valve events affect records from the pressure-sensitive pick-up unit and the externally mounted vibration pick-up unit in substantially the same manner.

5. The mechanical disturbances excited in the cylinder head by valve events become greater as the engine speed increases.

6. Variations in inlet manifold pressure at constant speed have substantially no effect on mechanical vibrations excited by valve events.

7. The time interval near the end of combustion (the detonation period) is substantially free from vibration if no audible detonation is present.

8. Vibration appears during the detonation period when incipient detonation is reached. This vibration is of less amplitude than the vibration due to valve events.

9. With detonation of medium intensity as judged by ear, the amplitude of vibration during the detonation period is approximately equal to that produced by valve events.

10. For detonation intensities higher than medium detonation, the vibrations occurring during the detonation period are of greater amplitude than the vibrations produced by valve events.

DESIGN AND TESTS OF AN EXPERIMENTAL DETONATION DETECTOR

General Considerations

The function of a detonation detector is not to give continuous readings of detonation intensity but to show in some positive fashion the presence of detonation when the intensity exceeds some arbitrarily established level. If the instrument is to be used in flight, it must be reliable in operation, low in weight, and small in size. The matter of cost is important but not necessarily a controlling factor since a satisfactory device could easily be the means of saving lives and valuable equipment. Actual indications should be in the form of a visual signal designed to fit into the "warning light" system of indication now coming into general

use for aircraft. A practical instrument will probably be electrically operated and composed of three parts.

1. A pick-up unit designed to be mounted on some part part of the cylinder

2. A visual indicating element preferably in the form of a small lamp.

3. A coupling system designed to transform the output of the pick-up unit into a form suitable for operating the indicating element.

One serious limitation to the performance of a detonation detector using either of the pick-up units in their present state of development is introduced by the fact that they respond to the cylinder-head vibration produced by valve events. The frequencies excited by detonation range from 6500 to 15,000 cycles per second. Valve closings excite vibrations with one strong component at about 10,000 cycles per second and another in the vicinity of 40,000 cycles per second. It is easily possible to eliminate the higher frequency by properly designing the coupling system but the lower frequency is in the range of detonation frequencies and consequently cannot be eliminated by filtering.

It is evident from table II that a detonation detector using the vibration-sensitive unit without any means to differentiate between detonation effects and valve-closing effects will be entirely inoperative for incipient detonation in the sense that any system sensitive enough to respond to detonation would give indications due to valve events. For a medium detonation intensity with the voltage due to detonation approximately equal to that produced by valve events, the response of the detector would be erratic. With heavy detonation as judged by ear, the differential between detonation effects and valve effects is great enough to give reliable results with a properly designed instrument. It follows from these observations that it should be a simple matter to construct an instrument to detect a sufficiently high level of detonation intensity. Some special provision must be incorporated, however, to eliminate effects due to valve events if it is necessary for the instrument to operate on lower intensities.

If the function of a flight instrument to detect detonation is to determine whether or not the "maximum allowable detonation" level has been exceeded, the possibility of designing an amplifier system to operate with the vibration-

sensitive pick-up unit depends upon the relationship between the maximum allowable level and medium detonation as used in the engine experiments. This problem could be settled only by trials of an actual working instrument on full-scale engines operating with known detonation intensities. This conclusion formed the basis for a decision to construct an experimental detonation detector using the vibration-sensitive pick-up unit and to conduct a series of experiments on both the single-cylinder and the full-scale engines.

Indicating Elements

Gaseous-discharge tubes give reasonably great amounts of light with low currents and high applied voltages. These operating characteristics make the discharge tube well suited for operation by vacuum-tube amplifiers. Neon tubes are commercially available and have the advantage of producing a red light, which is naturally associated with dangerous conditions. Tubes of this sort usually reach the breakdown point and flash when the applied potential reaches about 70 volts. Voltage changes of this magnitude can easily be obtained from a simple amplifier and power supply. For these reasons it was decided to use a neon tube for the indicating element of the experimental detonation detector.

Although the neon tube has the property of responding only when the breakdown potential is exceeded, its action is somewhat erratic because this potential is subject to changes of about 10 percent between different tubes of identical design. The breakdown potential is also modified to some extent by temperature effects. The effects of this uncertainty can be greatly reduced by incorporating a "trigger action" in the amplifier, which causes the gain to increase sharply when a certain input level is exceeded.

Amplifier

It is evident from the preceding discussion that an amplifier sensitivity greater than that necessary for operation on voltage inputs less than that produced by the pick-up for medium detonation will be of no practical use. It follows that the minimum useful input voltage is about 0.03 volt to produce breakdown of the indicating tube. If a safety factor of 3 is introduced for design purposes, the coupling system between the vibration-sensitive pick-up unit and the neon-tube indicator must produce a change of 70 volts in the

output voltage for a change of 0.01 volt on the input. This condition requires an over-all voltage gain ratio of about 7000 times.

Complete Detonation Detector

Circuits of an amplifier designed, built, and tested to determine the feasibility of the detonation-detection scheme outlined are shown in the diagram of figure 38. The vacuum tubes used achieve the desired compactness and the required gain. The first stage is a pentode amplifier, which contributes a voltage gain of about 75. The triode second stage amplifies about 10 times and furnishes the small amount of power required by the grid circuit of the third stage. This required grid power is the result of the use of the third stage as a "trigger" device, which will be discussed later. In addition to this action, the third stage approximately doubles the signal voltage level. The input transformer supplies the rest of the required gain and the gain control or attenuator connected directly to its secondary terminals.

Frequency discrimination in the amplifier has been attained by adjustment of the values of the coupling parameters. Attenuation of the frequencies above 15,000 cycles per second is the result of the input-transformer high-frequency characteristic. Low frequencies (below 6500 cps) are removed by the coupling-condenser and grid-leak combinations shown in the diagram. This pass-band effect is emphasized by the grid network of the third stage, which is broadly resonant in the desired band.

Triggering action of the third stage results from the following type of operation. The grid bias of the tube has been adjusted to a value twice that required to reduce the plate current to zero. When a signal voltage appears that has a positive voltage excursion in excess of the applied grid bias, a sharp rise in plate current will occur. A corresponding sharp rise in voltage across the output of the tube will follow and, if the breakdown potential of the neon-glow tube is approximately equal to one-half the maximum output voltage obtainable, it is obvious that a very small percentage increase in signal voltage above a predetermined level will cause the tube to glow. The effect of the possible 10-percent change in breakdown potential of the glow tube previously mentioned is reduced by the trigger circuit so that variations in the critical signal level are substantially eliminated.

Commercial neon-glow lamps operated satisfactorily as visual indicators but, in an effort to obtain more illumination for a given amplifier power output, the Strobotron circuit, labeled "Option 2" in the diagram, was included. This device gave greater illumination but its intensity was independent of the applied signal after the breakdown potential was exceeded.

Figure 39 shows the complete instrument with the amplifier housed in a 4- by 4- by 8-inch case. At the lower right, the Strobotron (Option 2) visual indicator may be seen and the simple neon-glow tube of Option 1 is seen on the amplifier panel. The attenuator control is at the lower left of the panel. Two vibration-type pick-up units will be seen lower left in the photograph. In the foreground is a modified type and the smaller unit to the rear is the one previously described. The weight of the equipment is approximately 4 pounds 8 ounces. The amplifier without its cast-aluminum case weighs 25 ounces, and the pick-up unit alone weighs 5 ounces.

Single-Cylinder-Engine Tests

The instrument was installed on the single cylinder of the previous tests. Familiarity with the engine conditions and the output of the pick-up unit gave a firm basis for judging the performance of the instrument. It was found that below 2000 rpm with no detonation, the neon tube would just stop flashing at an attenuator setting of 65. When the conditions designated "medium detonation" were reached, the lamp was seen to flash occasionally. As the detonation intensity was increased, the light flashed more regularly and more brilliantly. The attenuator was then set at about 75 with nondetonating engine conditions. Valve events caused the lamp to flash regularly and dimly. As the engine condition corresponding to incipient or light detonation was reached, the lamp appeared to flash more rapidly and the flashes were of greater duration. With some practice an operator could detect incipient detonation in the presence of the flashes due to valve motion.

Full-Scale Aircraft-Engine Tests

Unknown factors regarding the practicability of the instrument under test were as follows:

1. How does the scale of detonation intensity tentatively adopted in the single-cylinder tests compare with the empirical scale set up by aircraft engine manufacturers in their laboratories

2. Will the level of valve-event disturbances be higher or lower in full-scale engines than in the single-cylinder engine used for previous tests

In order to answer these questions, the equipment was taken to the test laboratories of the Wright Aeronautical Corporation and of the Pratt & Whitney Aircraft Company. At both places the apparatus was installed and tested on full-scale engines.

At the Wright Company, installation was made on a nine-cylinder Cyclone engine. Nondetonating conditions were established by the use of 95-octane fuel in a rich mixture. The critical attenuator setting was found to be 69. Mixture was leaned and the action of the detector was compared with independent exhaust-flame observations. The lamp was out until the condition of medium detonation was reached and here the lamp flashed occasionally. Repeat runs were made with 87-octane fuel with similar results except that higher detonation intensities were possible. The response to heavy and severe detonation was brilliant and regular.

Installation was made in the laboratory of the Pratt & Whitney Company on a high-performance twin-row fourteen-cylinder engine. It was found here that the critical attenuator setting was about 62. As the mixture was leaned, the lamp consistently flashed brightly before the condition known as "maximum allowable detonation" was reached.

From these tests, it was determined that the valve-event level and the detonation-intensity levels experienced in the single-cylinder test engine are not appreciably different from those found in full-scale aircraft engines.

CONCLUSION

An instrument has been designed, constructed, and tested for the purpose of detecting a phenomenon which has first been carefully analyzed. This equipment was built to demonstrate a principle of operation to which engineering could be applied to produce a finished flight instrument. From the engine tests

outlined, it is concluded that this type of equipment may be applied to routine operation of a high-performance aircraft engine and will detect with certainty the presence of dangerous conditions of detonation. Observations of the extent of valve-event disturbances in representative engines lead to the belief that the detection of lower intensities of detonation will require further discrimination against these disturbances. This result will be most effectively accomplished by a synchronizing device that renders the amplifier operative only during the detonation period. Two schemes are proposed: The first is to couple a voltage from the radiation of the ignition system into the amplifier to produce a cyclic variation of gain; the second device is a simple mechanical commutator that will act on the amplifier in the same manner. The first of these proposed methods is preferable since it requires no mechanical attachment to the engine. Engineers representing the engine manufacturers who have witnessed operation of the detector have agreed that the proposed device is simple, rugged, and definitely detects the presence of serious detonation.

Massachusetts Institute of Technology,
Cambridge, Mass., October 21, 1938.

REFERENCES

1. Beale, E. S. L., and Stansfield, R.: Principle of the Sunbury Knock Indicator. SAE Jour., vol. 41, no. 3, Sept. 1937, p. 436.

2. Berthelot and Vieille: Ann. de Phys. et Chim., vol. 28, ser. V, 1881, pp. 289-322.

3. Berthelot and Vieille: Nouvelle recherches sur la propagation des phenomenes explosifs dans les gas. Comptes Rendus, vol. 95, 1882, pp. 151-157.

4. Berthelot and Vieille: Vitesse relative de combustion des melanges tarzeux detonants. Comptes Rendus, vol. 98, 1884, pp. 646-651.

5. Becker, R.: Impact Waves and Detonation. Pts. I and II. NACA TM Nos. 505 and 506, 1929.

6. Marvin, Charles F., Jr., and Best, Robert D.: Flame Movement and Pressure Development in an Engine Cylinder. NACA Rep. No. 399, 1931.

7. Marvin, Charles F., Jr.: Observations of Flame in an Engine. SAE Jour., vol. 35, no. 5, Nov. 1934, pp. 391-398.

8. Marvin, Charles F., Jr., Wharton, Armistead, and Roeder, Carl H.: Further Studies of Flame Movement and Pressure Development in an Engine Cylinder. NACA Rep. No. 556, 1936.

9. Withrow, Lloyd, and Boyd, T. A.: Photographic Flame Studies in the Gasoline Engine. Ind. and Eng. Chem., vol. 23, no. 5, May 1931, pp. 539-547.

10. Withrow, Lloyd, and Rassweiler, Gerald M.: Engine Knock. The Automobile Engineer, vol. XXIV, no. 322, Aug. 1934, pp. 281-284.

11. Withrow, Lloyd, and Rassweiler, Gerald M.: Emission Spectra of Engine Flames. Ind. and Eng. Chem., vol. 24, no. 5, May 1932, pp. 528-538.

12. Wawrziniok, Professor: Pressure Rise, Gas Vibrations, and Combustion Noises during the Explosion of Fuels. NACA TM No. 711, 1933.

13. Draper, C. S.: The Physical Effects of Detonation in a Closed Cylindrical Chamber. NACA Rep. No. 493, 1934.

14. Draper, C. S.: Pressure Waves Accompanying Detonation in the Internal Combustion Engine. Jour. Aero. Sci., vol. 5, no. 6, April 1938, pp. 219-226.

15. Young, Raymond W.: Air-Cooled Radial Aircraft-Engine Performance Possibilities. SAE Jour., vol. 38, no. 6, June 1936, pp. 234-256.

16. Withrow, Lloyd, and Rassweiler, Gerald M.: Slow Motion Shows Knocking and Non-Knocking Explosions. SAE Jour., vol. 39, no. 2, Aug. 1936, pp. 297-303, 312.

17. Pye, D. R.: The Internal Combustion Engine. The Clarendon Press (Oxford), 1931

18. Barnard, D. P.: Value of Octane Numbers in Flying. SAE Jour., vol. 41, no. 3, Sept. 1937, pp. 415–420.

19. Veal, C. B.: Rating Aviation Fuels in Full-Scale Aircraft Engines. SAE Jour., vol. 38, no. 5, May 1936, pp. 161–175.

20. Rothrock, A. M., and Biermann, Arnold E.: Engine Performance and Knock Rating of Fuels for High-Output Aircraft Engines. NACA TN No. 647, 1938.

21. Taylor, C. F., and Taylor, E. S.: Present Views on the Nature of Detonation in the Otto Cycle Engine. Jour. Aero. Sci., vol. 1, July 1934, p. 135.

22. Taylor, C. F., Draper, C. S., Taylor, E. S., and Williams, G. L.: A New Instrument Devised for the Study of Combustion. SAE Jour., vol. 34, no. 2, Feb. 1934, pp. 59–62.

23. Sisco, F. T.: The Alloys of Iron and Carbon. Vol. II – Properties. The Engineering Foundation. McGraw-Hill Book Co., Inc., 1937.

24. Messkin-Kussman: Die Ferromagnetischen Legierungen. Julius Springer (Berlin), 1932.

25. RCA Manufacturing Co.: Cathode-Ray Tubes and Allied Types. TS-2, 1935.

26. Bouchard, C. L., Taylor, C. Fayette, and Taylor, E. S.: Variables Affecting Flame Speed in the Otto-Cycle Engine. SAE Jour., vol. 41, no. 5, Nov. 1937, pp. 514–520.

27. Terman, H. E.: Radio Engineering. McGraw-Hill Book Co., Inc., 1937, ch. V, secs. 41–44.

TABLE I - Log Sheet of Detonation Runs

(M.I.T. Aero Engine Laboratory, May 25, 1938. Wright Cyclone G engine; 87-octane fuel (except run 15); specific gravity, 0.73; wet bulb, 58; dry bulb, 73; bore, 6-1/8 in.; stroke, 6-7/8 in.; compression ratio, 6.5; spark advance, 15°; barometer (corrected), 768 mm; pressure attenuator, 50; vibration attenuator, 100; oil pressure, 60 lb per sq in.)

Run	Engine speed (rpm)	bmep (lb per sq in.)	bhp	Brake specific fuel consumption (lb per bhp per hr)	Oil temperature (°F)	Manometer (in. Hg abs.)	Air temperature (°F)	Head temperature (°F)	Record	Remarks
1	1,600	88	36.0	0.502	150	26	190	325	D21	
2	1,900	88	42.8	.463	140	26	180	350	D22	
3	2,200	81.5	45.9	.485	150	26	185	350	D23	
4	1,600	137	56.0	.510	190	34	175	350	[a]D24	
5	1,900	137	66.5	.572	140	34	180	350	[a]D25	
6	2,200	137	77.0	.758	140	37	190	350	[a]D26	
7	1,600	163	66.7	.736	120	40	180	325	[a]D27	
8	1,960	182.5	91.4	.680	140	44	180	350	D28	
9	2,200	182.5	102.8	.850	140	47	180	350	[a]D29	Light detonation.
10	1,920	143.5	70.5	.540	140	36	185	350	D30	No detonation.
11	2,040	143.5	74.8	.490	140	36	180	350	D31	Incipient detonation.
12	1,980	140	71.0	.467	140	36	185	350	D32	Medium detonation.
13	1,910	137	66.8	.448	140	36	180	350	D33	Heavy detonation.
14	2,370	182.5	111.0	.825	140	48	175	350	D34	Do.
15	2,140	204	111.2	.760	140	50	170	375	D35	(b)

[a]Records not included in report.
[b]100-octane fuel; no detonation.

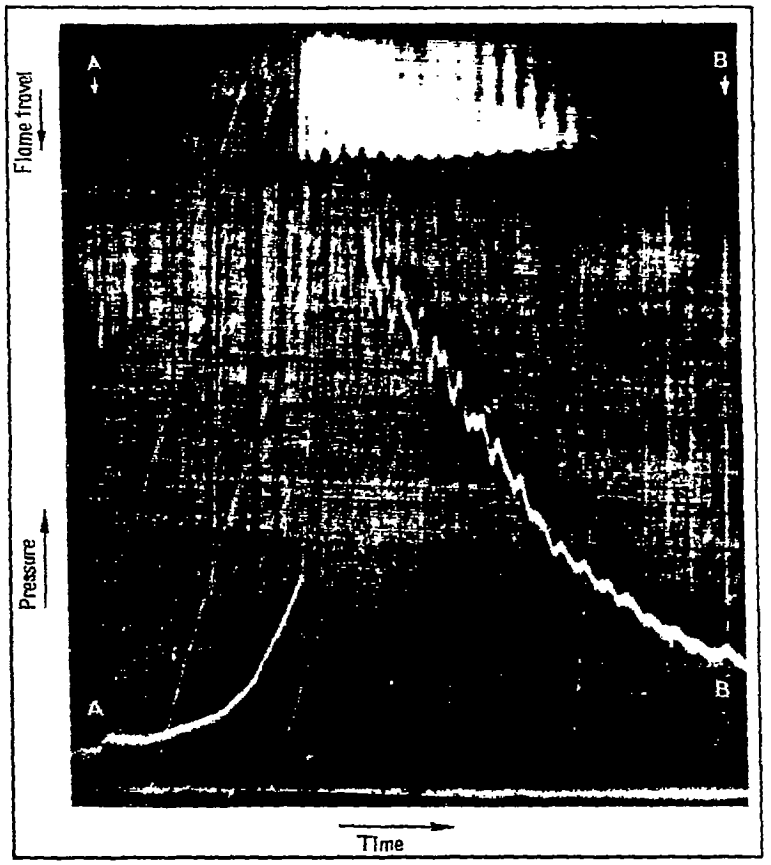

Figure 1.- The relationship between the frequencies of the shock waves on the flame photographs and the vibrations recorded on the pressure cards at an engine speed of 1,500 r.p.m. Knock induced with isopropyl nitrite.

Fuel, petrol, Full throttle, Spark advance, 30 deg.; A, ignition, B, 91 deg. after ignition.

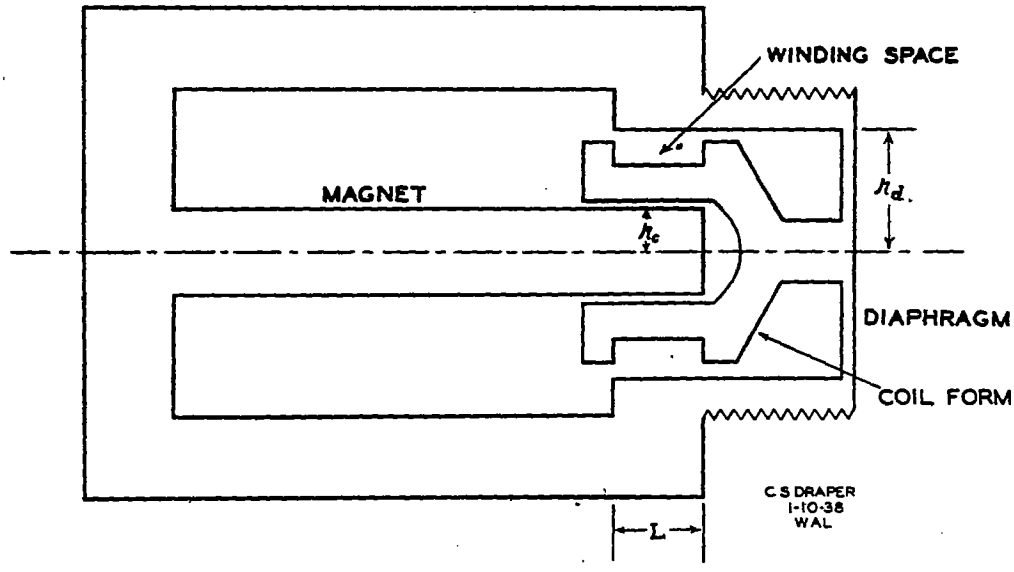

ELEMENTS OF INDICATOR WITH MOVING-COIL GENERATOR

FIG. 2

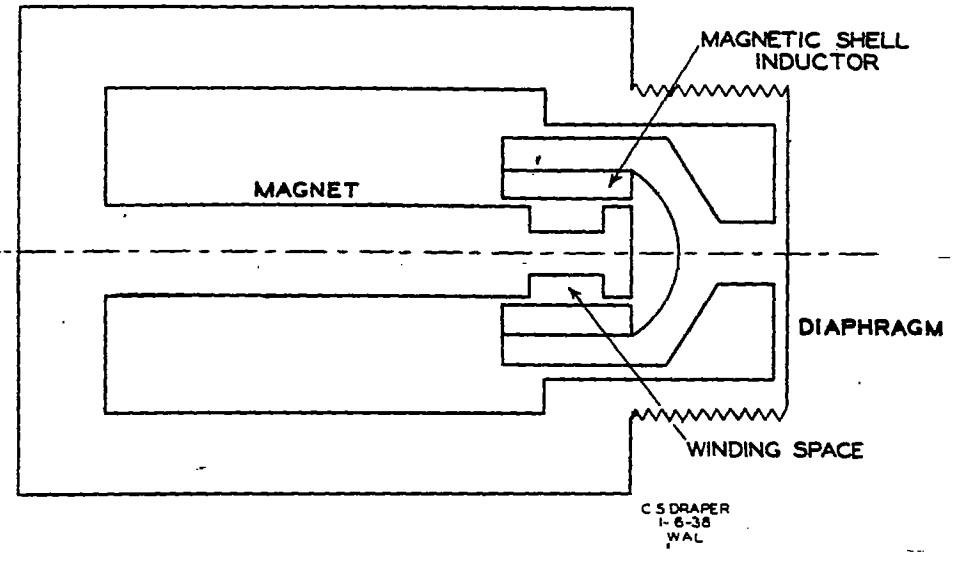

ELEMENTS OF INDICATOR WITH SHELL INDUCTOR GENERATOR

FIG. 3

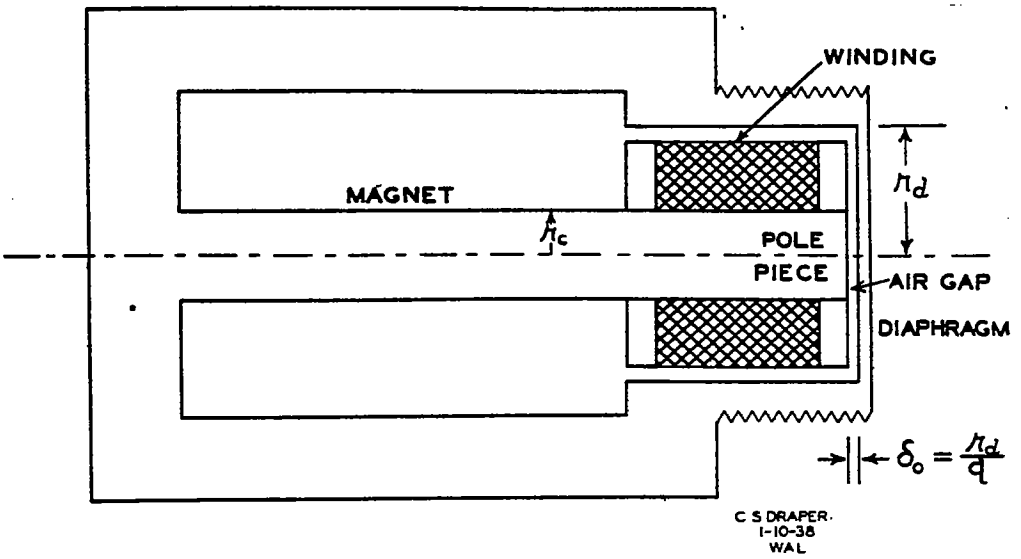

ELEMENTS OF INDICATOR WITH FLAT-DIAPHRAGM GENERATOR.

FIG. 4

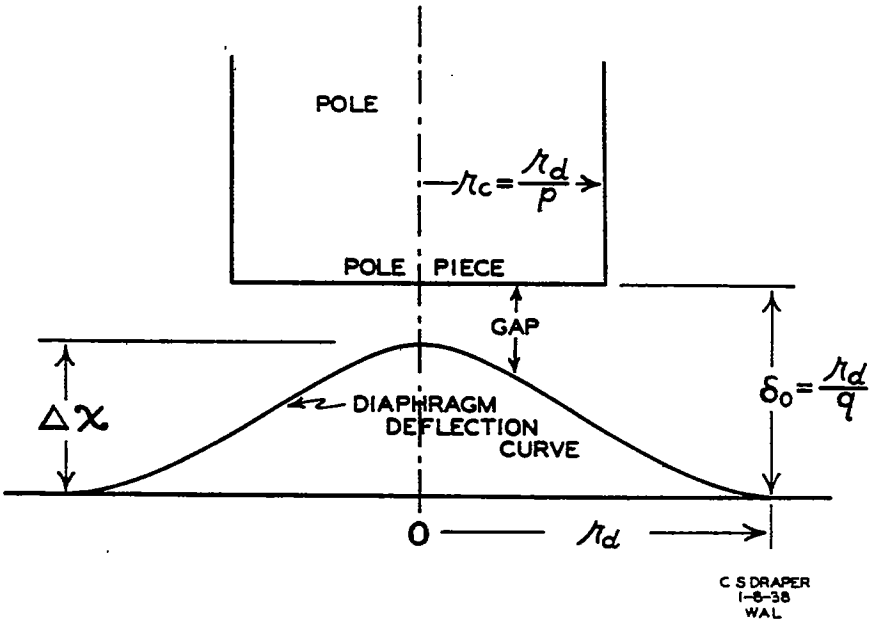

AIR GAP BETWEEN DIAPHRAGM AND FLAT POLE PIECE.

FIG. 5

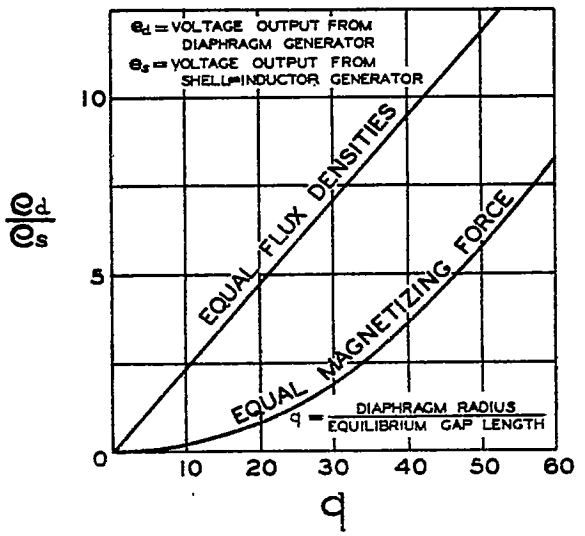

FIGURE 6.- RATIO BETWEEN GENERATED VOLTAGE FROM DIAPHRAGM AND SHELL INDUCTOR GENERATORS FOR EQUAL VELOCITIES.

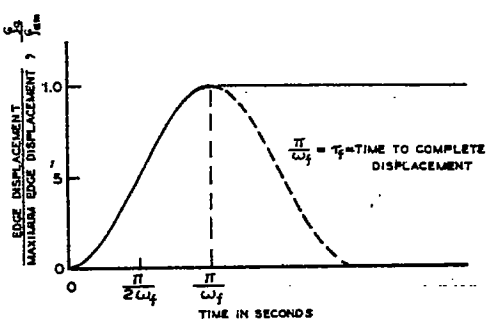

FIGURE 7.- TYPICAL FORCING DISPLACEMENT VS. TIME.

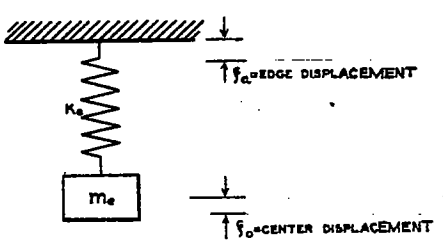

FIGURE 8.- EQUIVALENT SYSTEM FOR DIAPHRAGM.

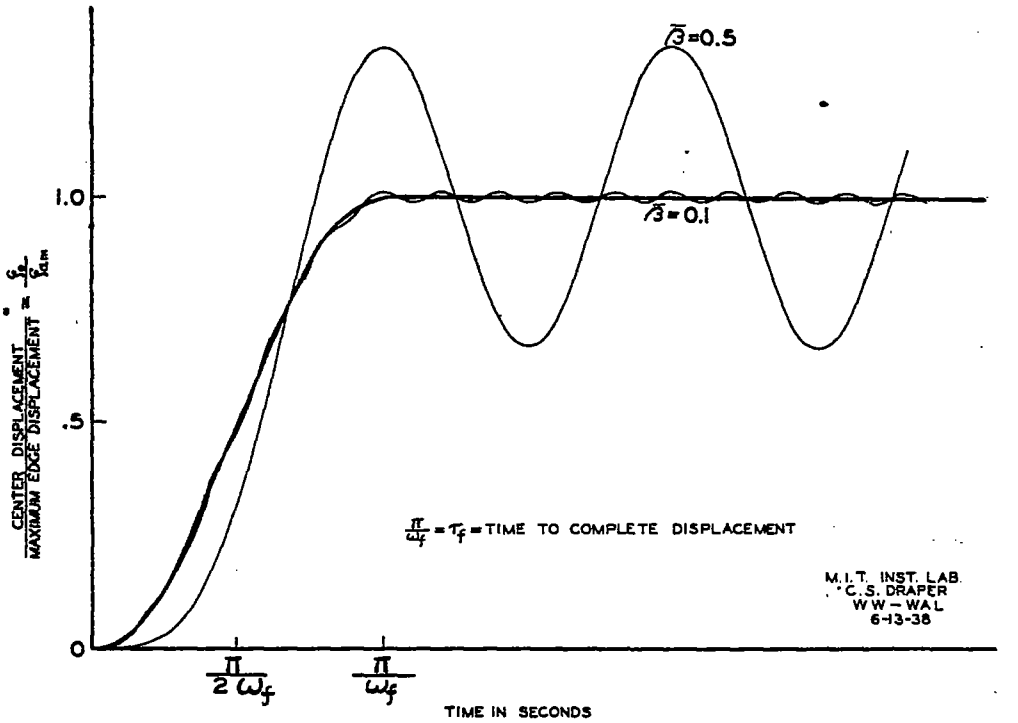

ABSOLUTE DISPLACEMENT OF DIAPHRAGM CENTER VS. TIME.

FIG. 9

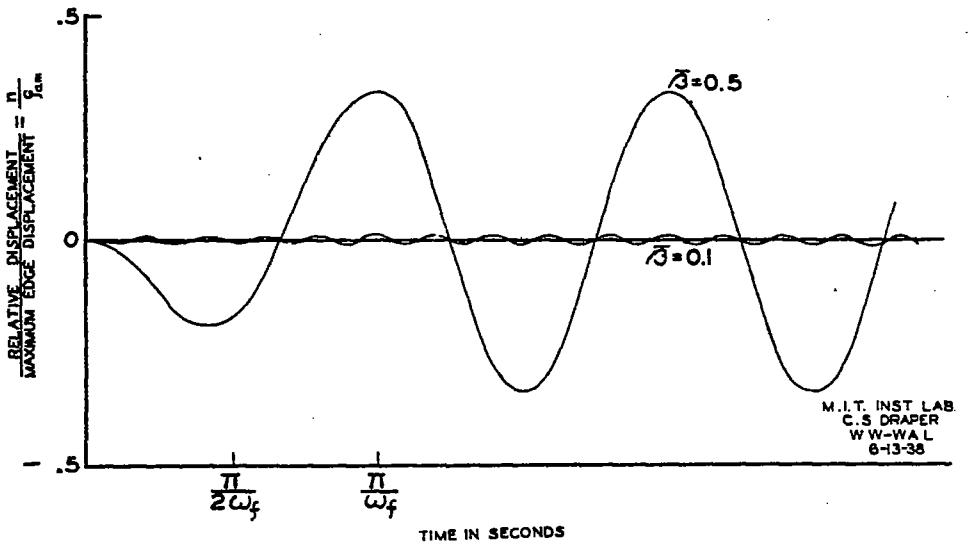

DISPLACEMENT OF DIAPHRAGM CENTER RELATIVE TO ITS EDGES VS. TIME.

FIG. 10

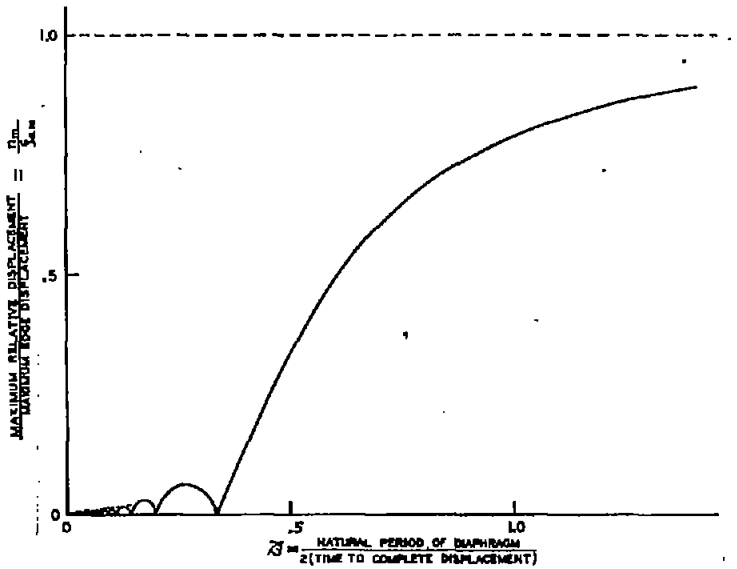

MAXIMUM AMPLITUDE OF TRANSIENT VS. NATURAL FREQUENCY.

FIG. 11

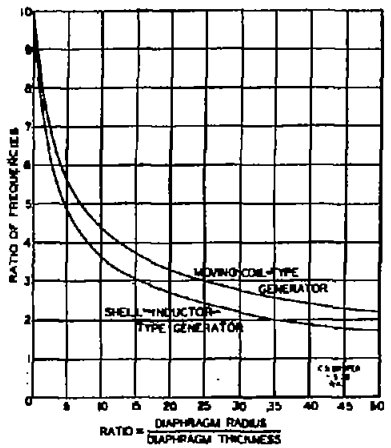

EFFECT OF ATTACHED PARTS ON NATURAL FREQUENCY OF GENERATING SYSTEM, COMPARISON WITH FLAT DIAPHRAGM.

FIG. 12

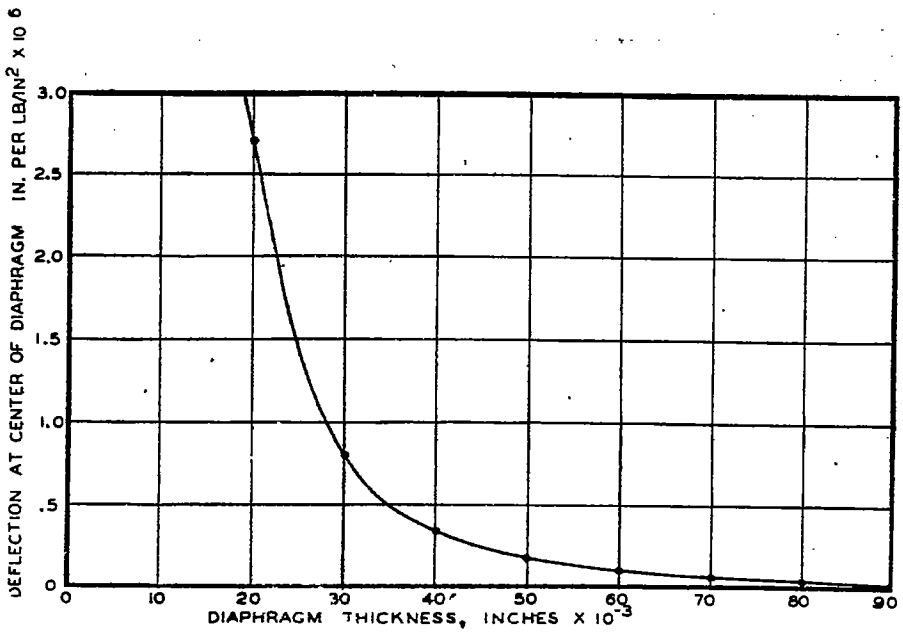

ELASTIC COEFFICIENT
OF
CIRCULAR STEEL DIAPHRAGMS.

FIGURE 13

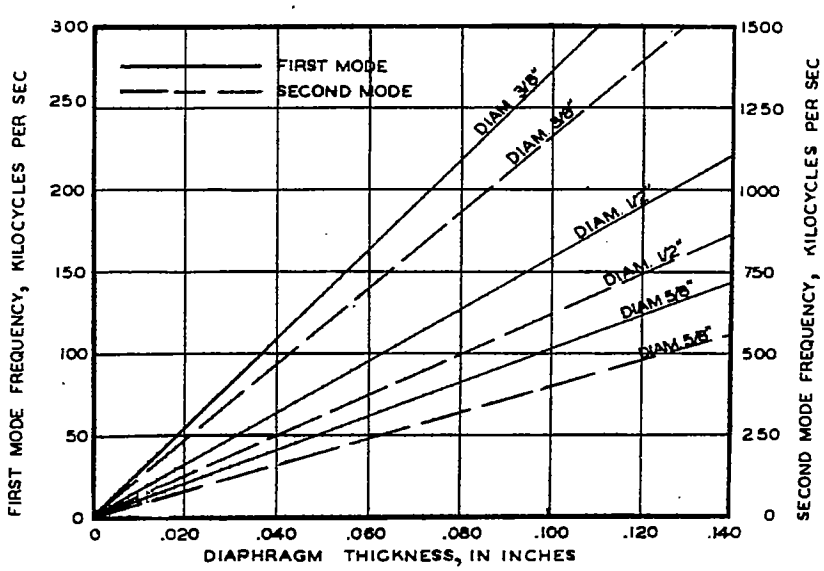

NATURAL FREQUENCY vs. THICKNESS
FOR CIRCULAR STEEL DIAPHRAGMS.

FIGURE 14

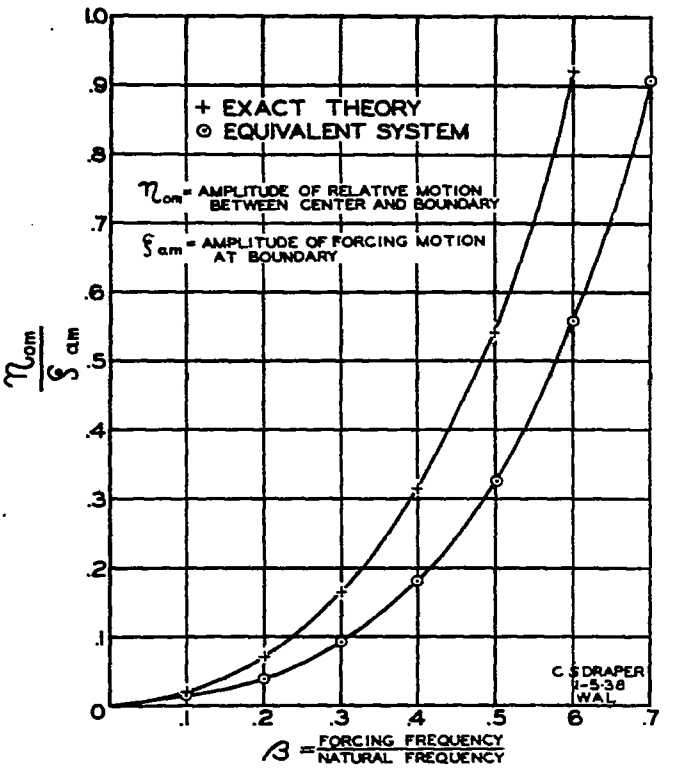

MOTION OF CLAMPED DIAPHRAGM DUE TO SIMPLE HARMONIC MOTION OF BOUNDARY.

FIG. 15

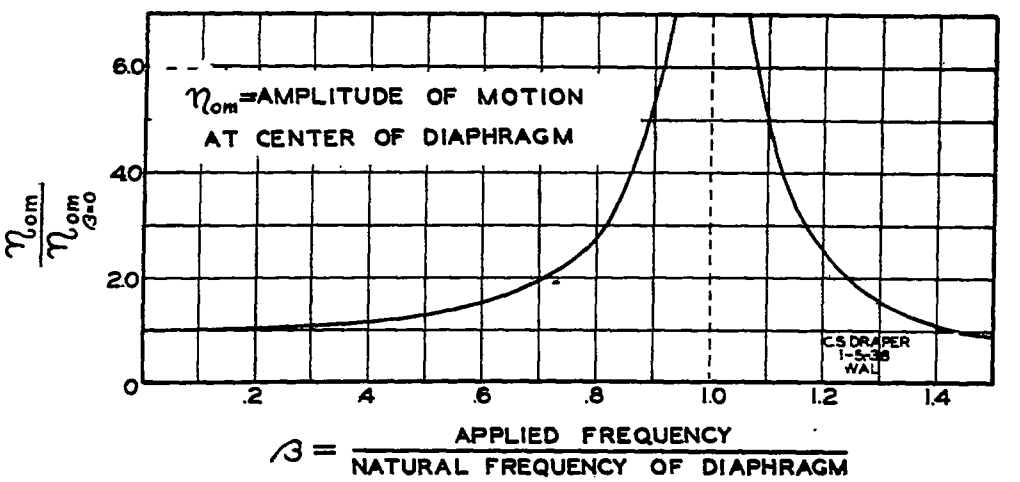

EFFECT OF FREQUENCY ON DIAPHRAGM DEFLECTION UNDER UNIFORM PRESSURE VARYING SINUSOIDALLY.

FIG. 16

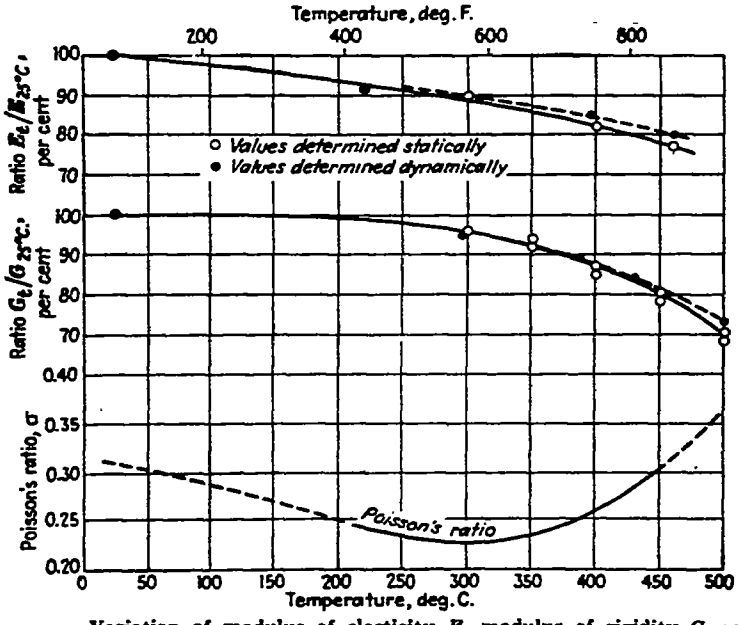

Variation of modulus of elasticity E, modulus of rigidity G, and Poisson's ratio σ with temperature, for a medium-carbon steel.

REF. 23

FIG. 17

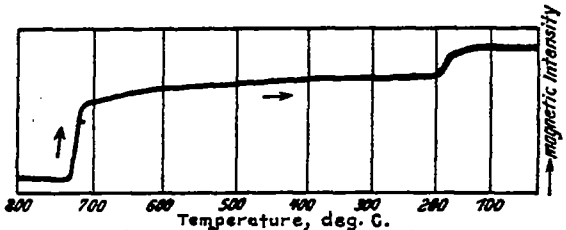

Magnetisierungs-Temperaturkurve für Stahl mit 1,2% C (Esser).

REF. 24

FIG. 18

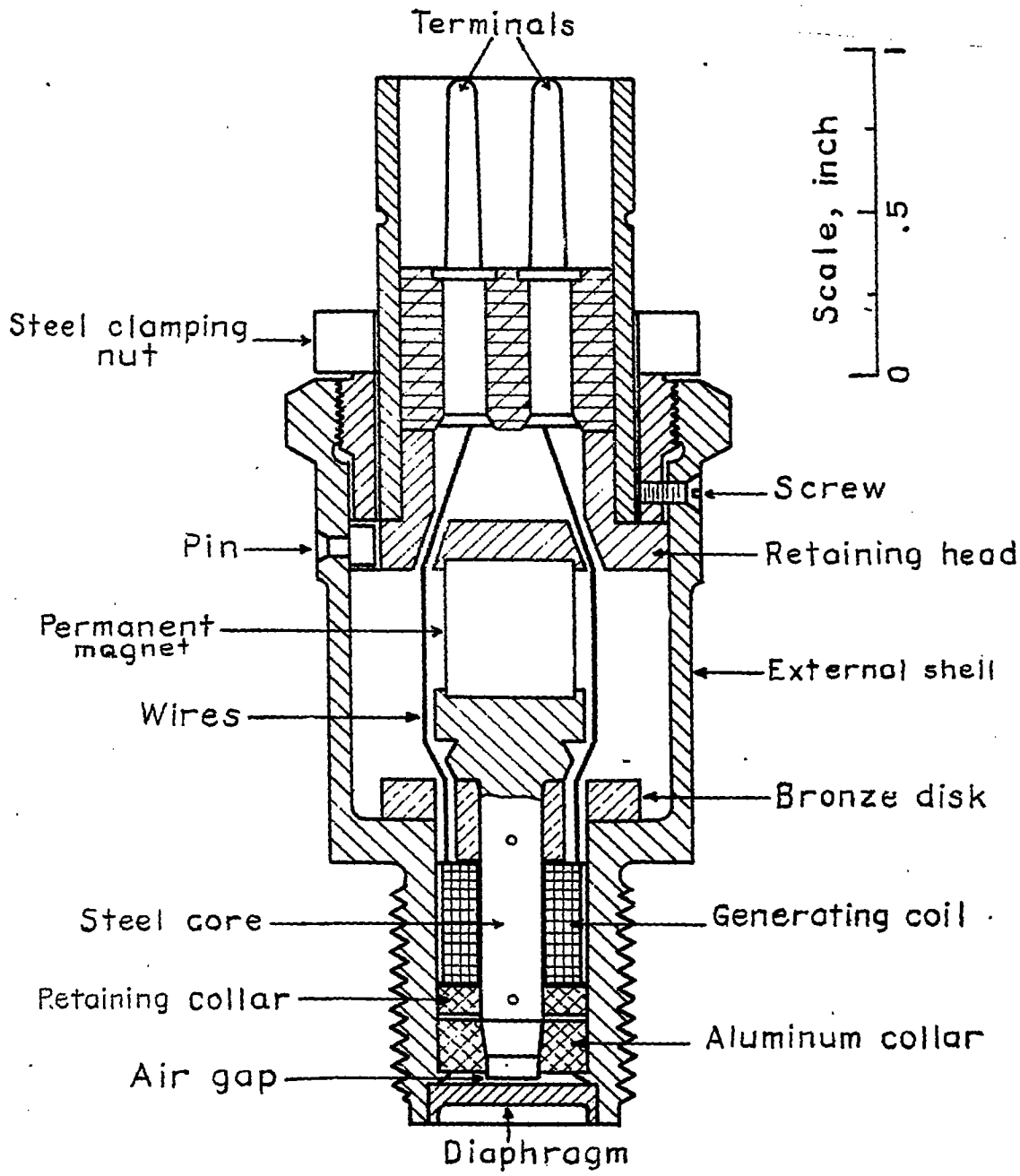

PICK UP UNIT FOR RATE OF CHANGE OF PRESSURE

FIG. 19

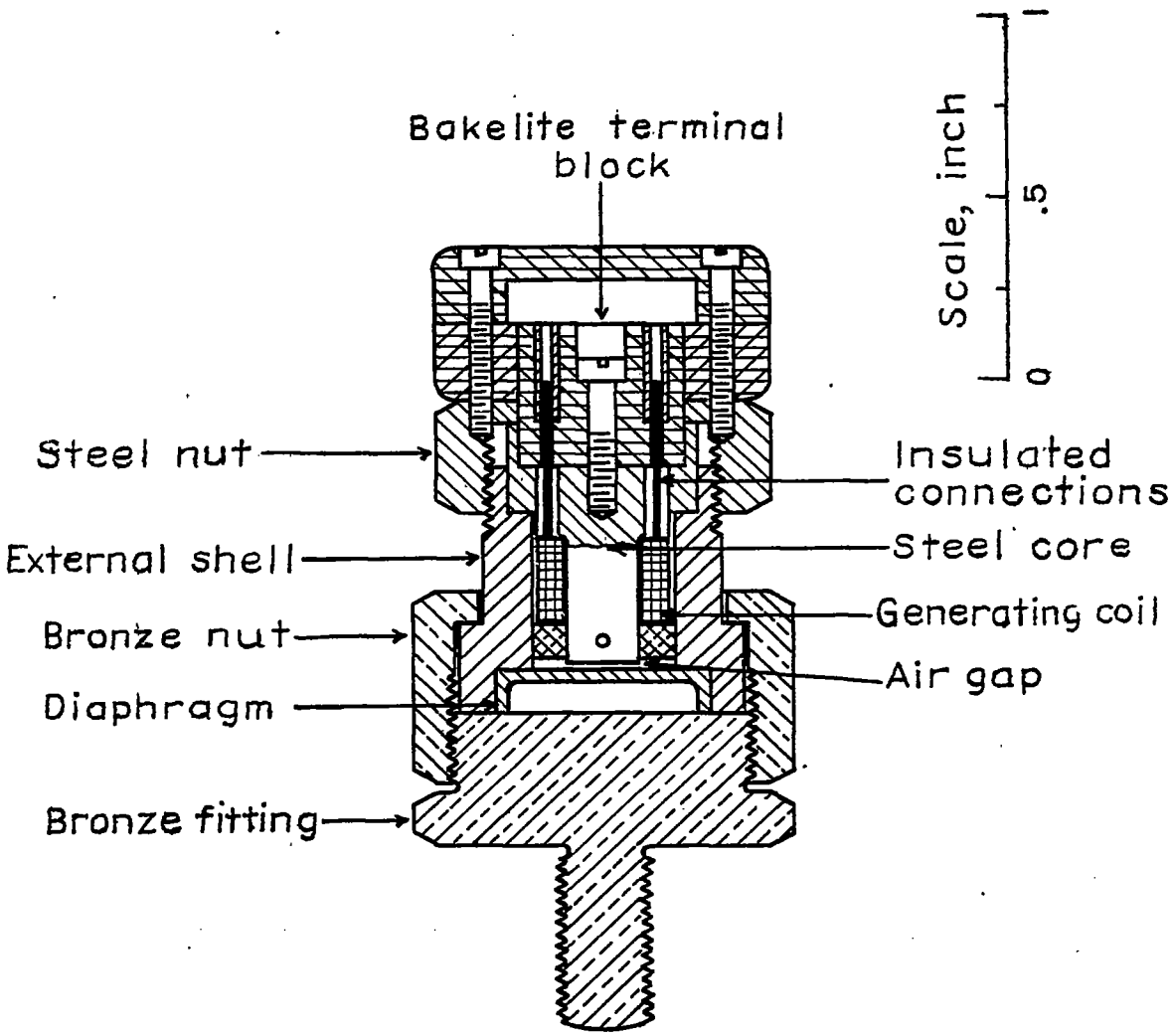

PICK UP UNIT FOR MECHANICAL VIBRATION.

FIG. 20

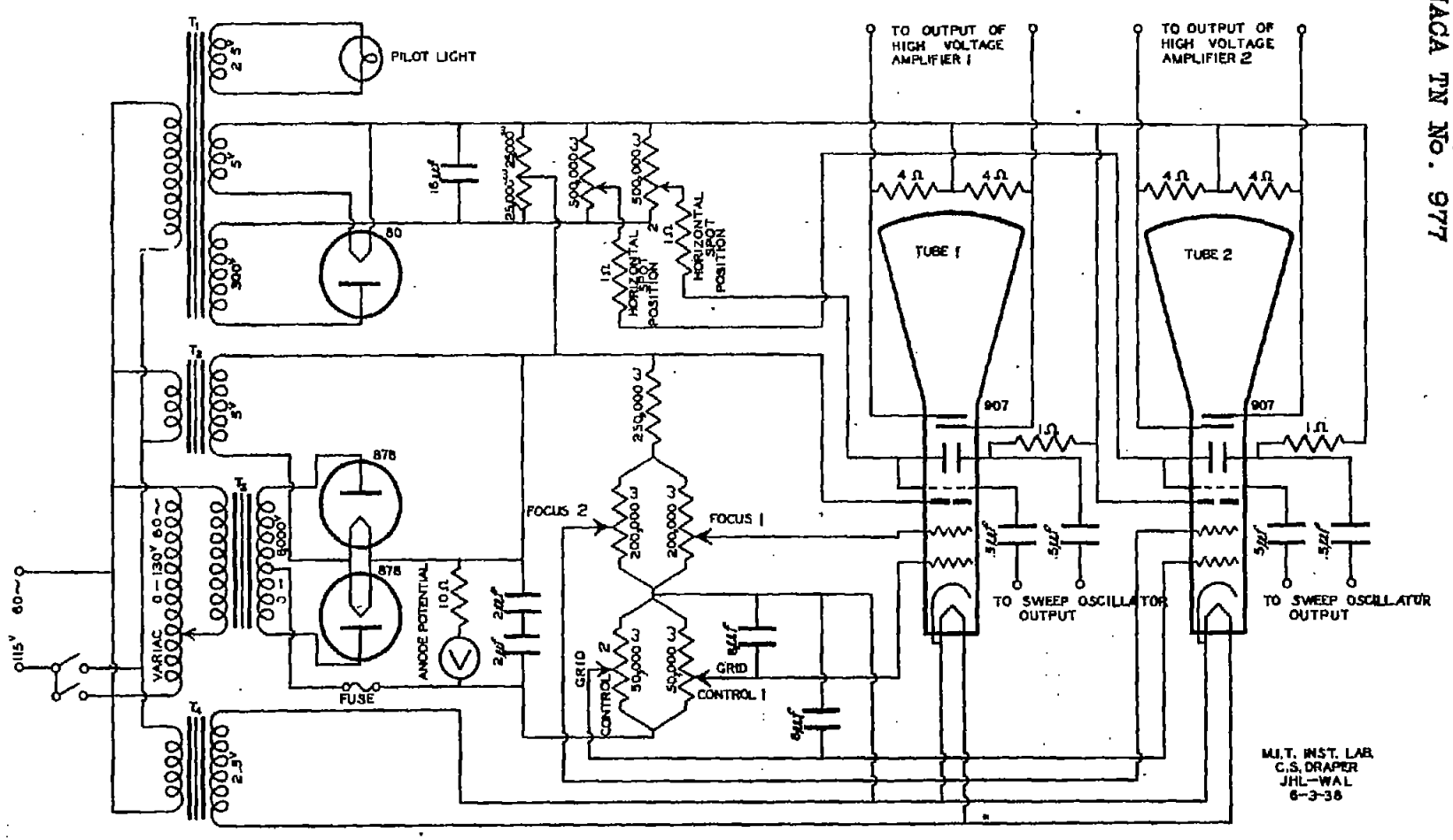

NOTE: MAXIMUM CAPACITY BETWEEN WINDINGS OF T_3 AND T_4 IS 100 $\mu\mu f$.

CIRCUIT DIAGRAM OF TWO-ELEMENT CATHODE-RAY OSCILLOGRAPH AND POWER SUPPLY.

FIG. 21

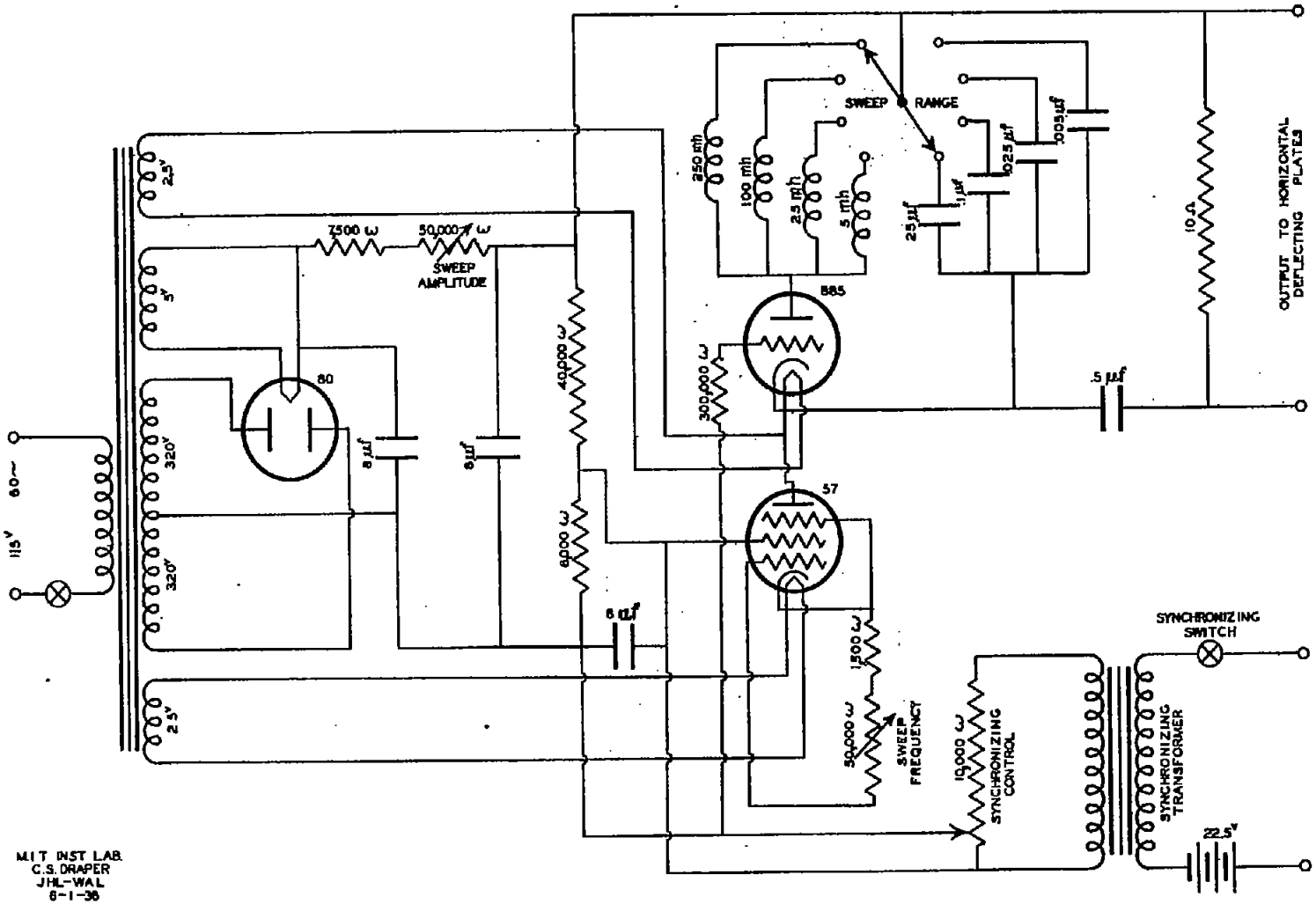

CIRCUIT DIAGRAM OF SWEEP OSCILLATOR.

FIG. 22

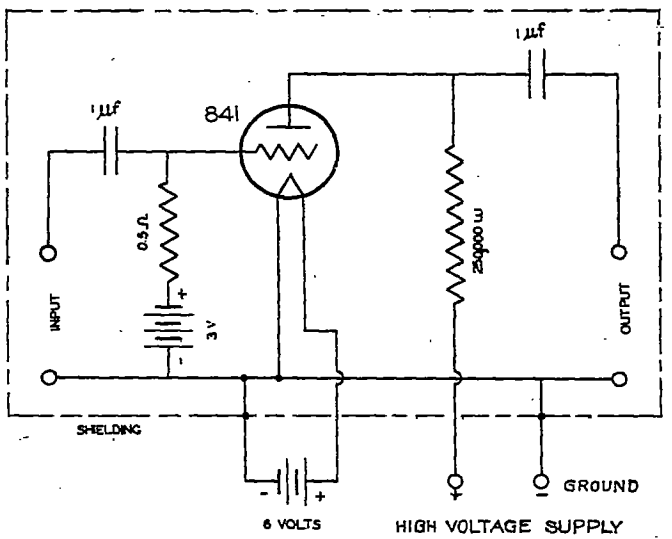

CIRCUIT DIAGRAM OF HIGH VOLTAGE AMPLIFIER.

FIG. 23

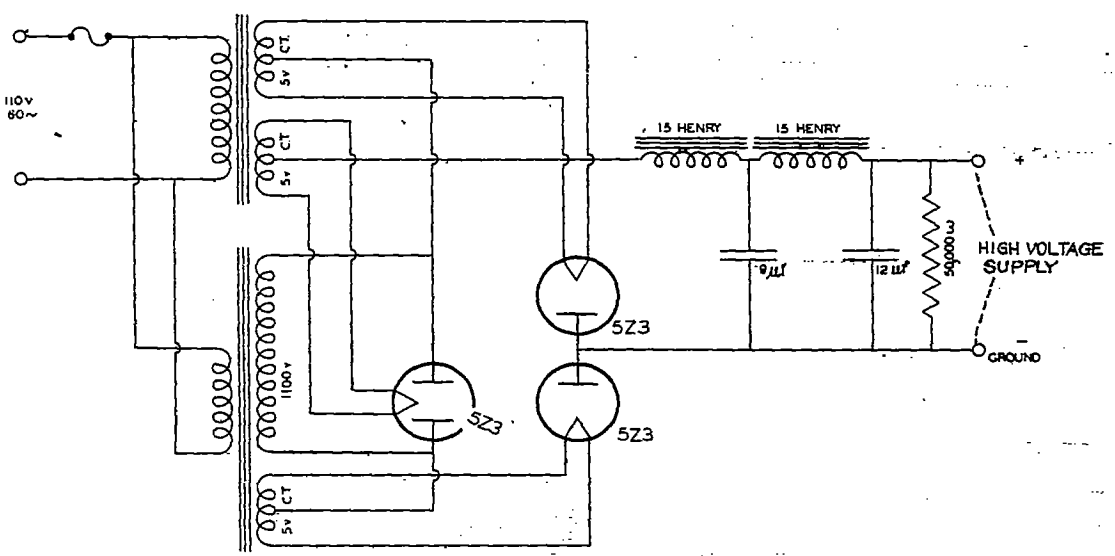

CIRCUIT DIAGRAM OF HIGH-VOLTAGE POWER SUPPLY.

FIG. 24

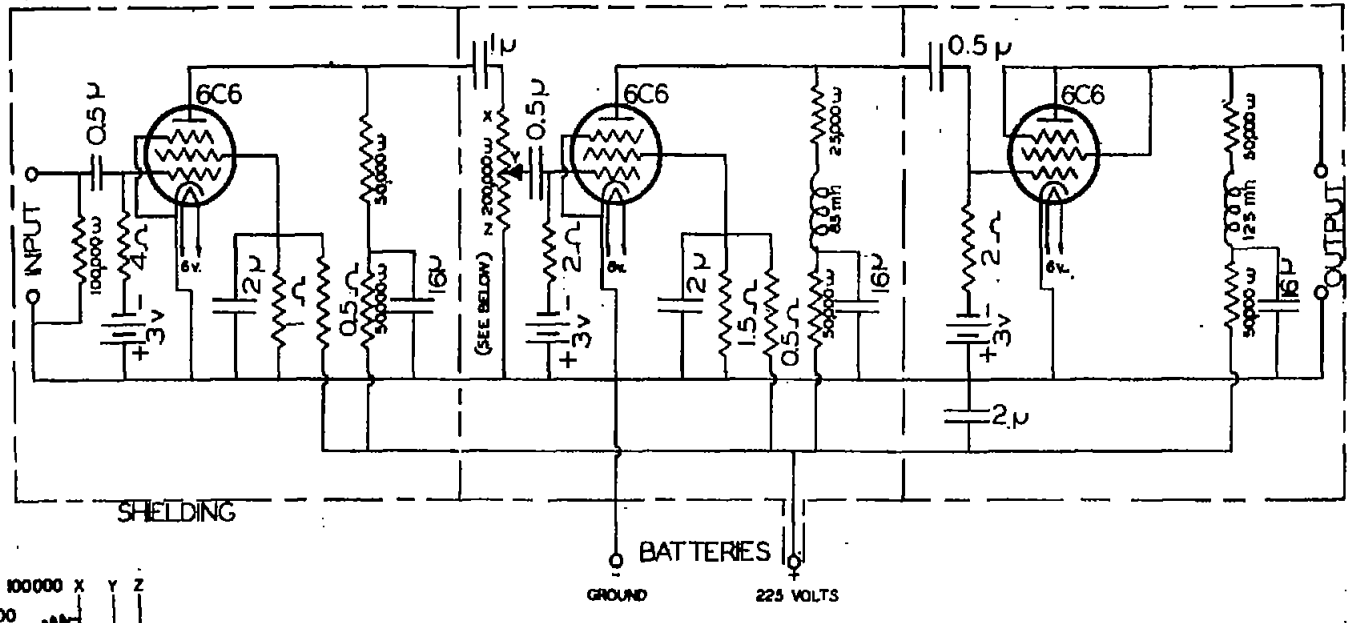

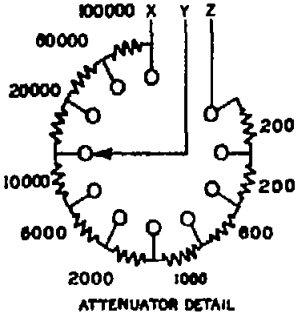

CIRCUIT DIAGRAM OF HIGH-GAIN AMPLIFIER.

FIG. 25

W A S JUNE 1937

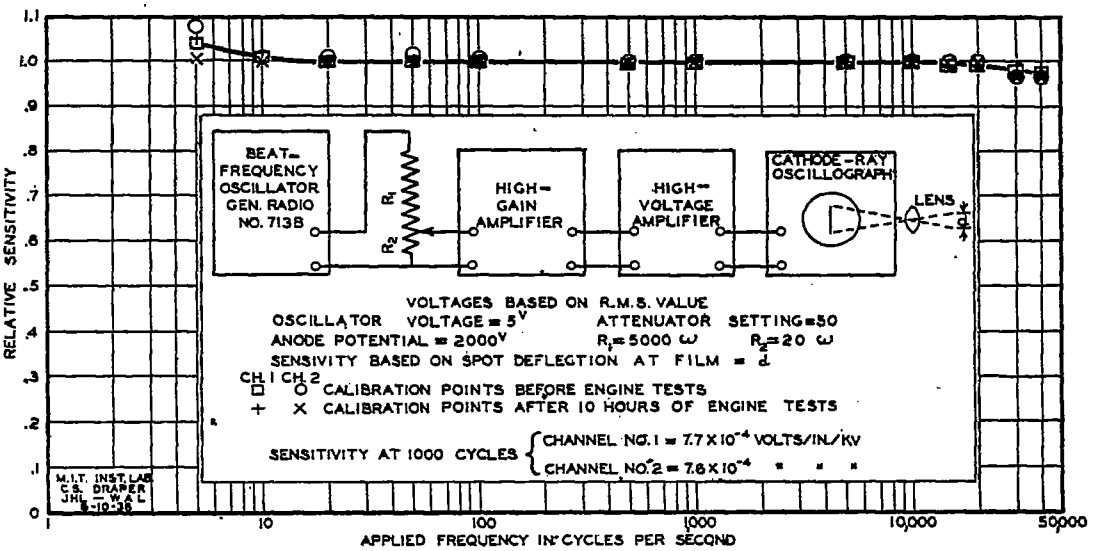

ELECTRICAL CALIBRATION OF AMPLIFIER-OSCILLOGRAPH SYSTEM.
FIG.26

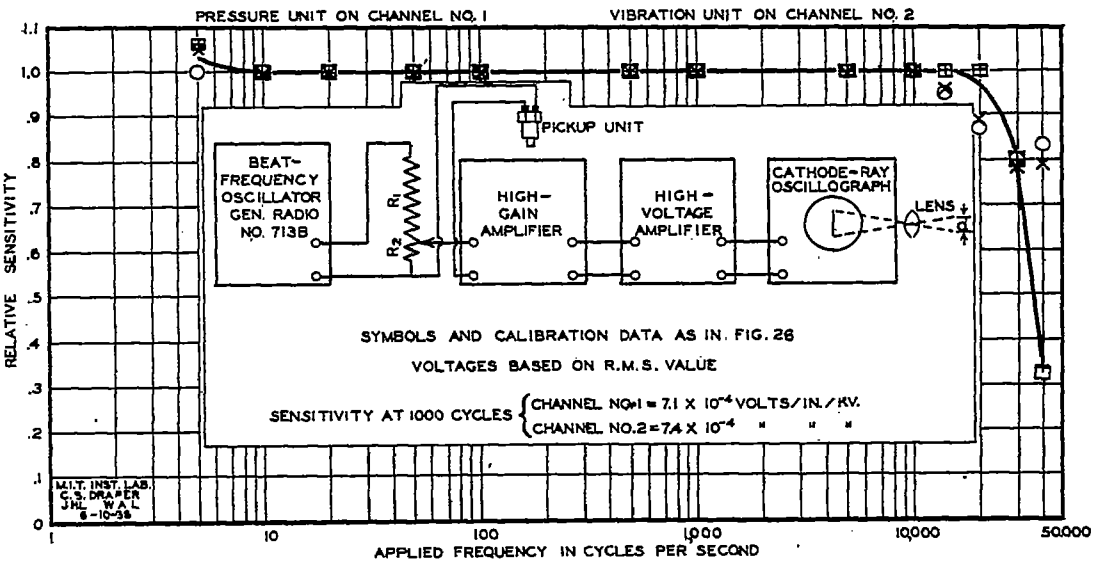

ELECTRICAL CALIBRATION OF AMPLIFIER-OSCILLOGRAPH SYSTEM WITH PICKUP UNITS.
FIG.27

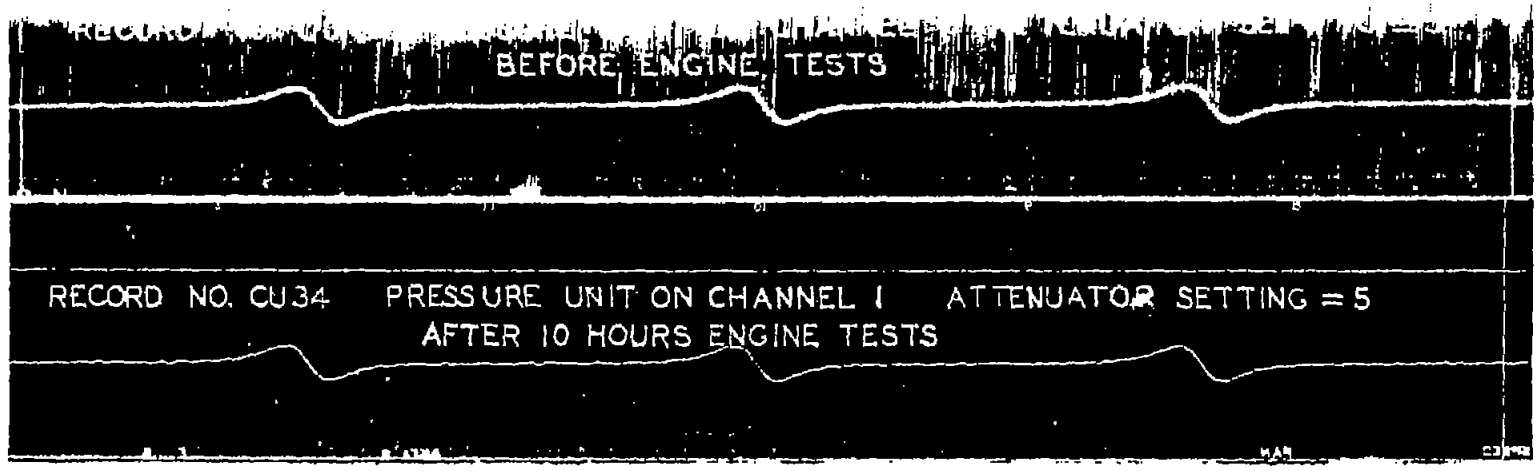

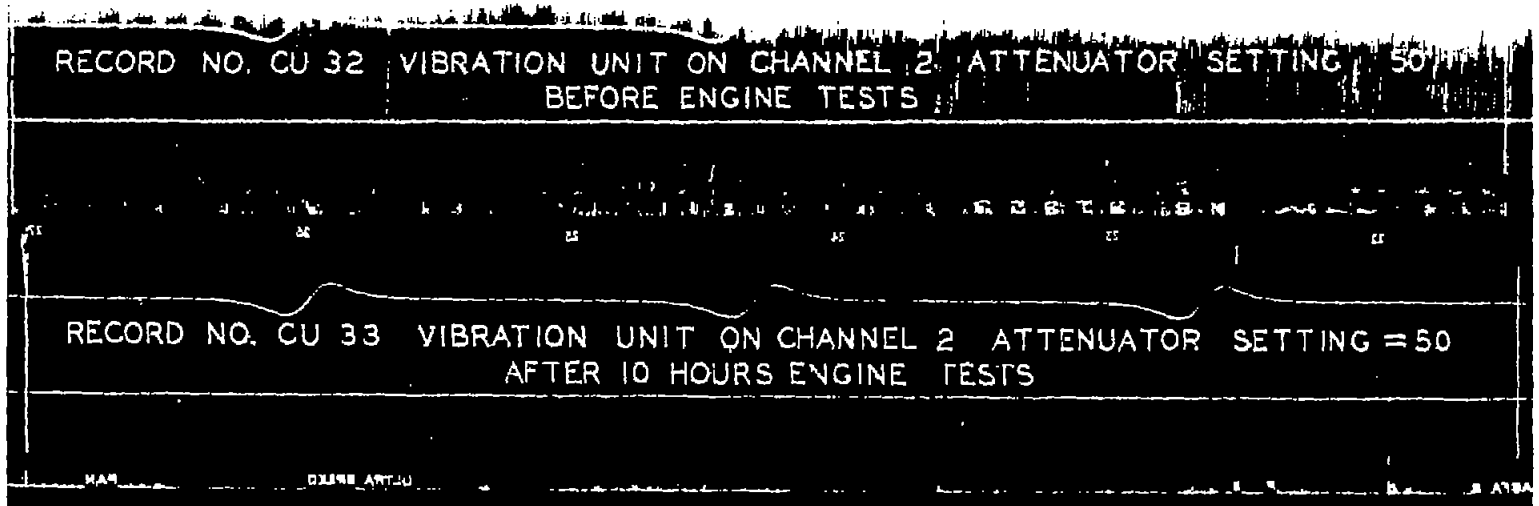

FIG. 28 $\frac{dP}{dt}$ RECORDS FOR OVERALL CALIBRATION TAKEN ON SPECIAL PRESSURE CALIBRATOR AT 1200 R.P.M. FILM SPEED, 50 INCHES PER SECOND

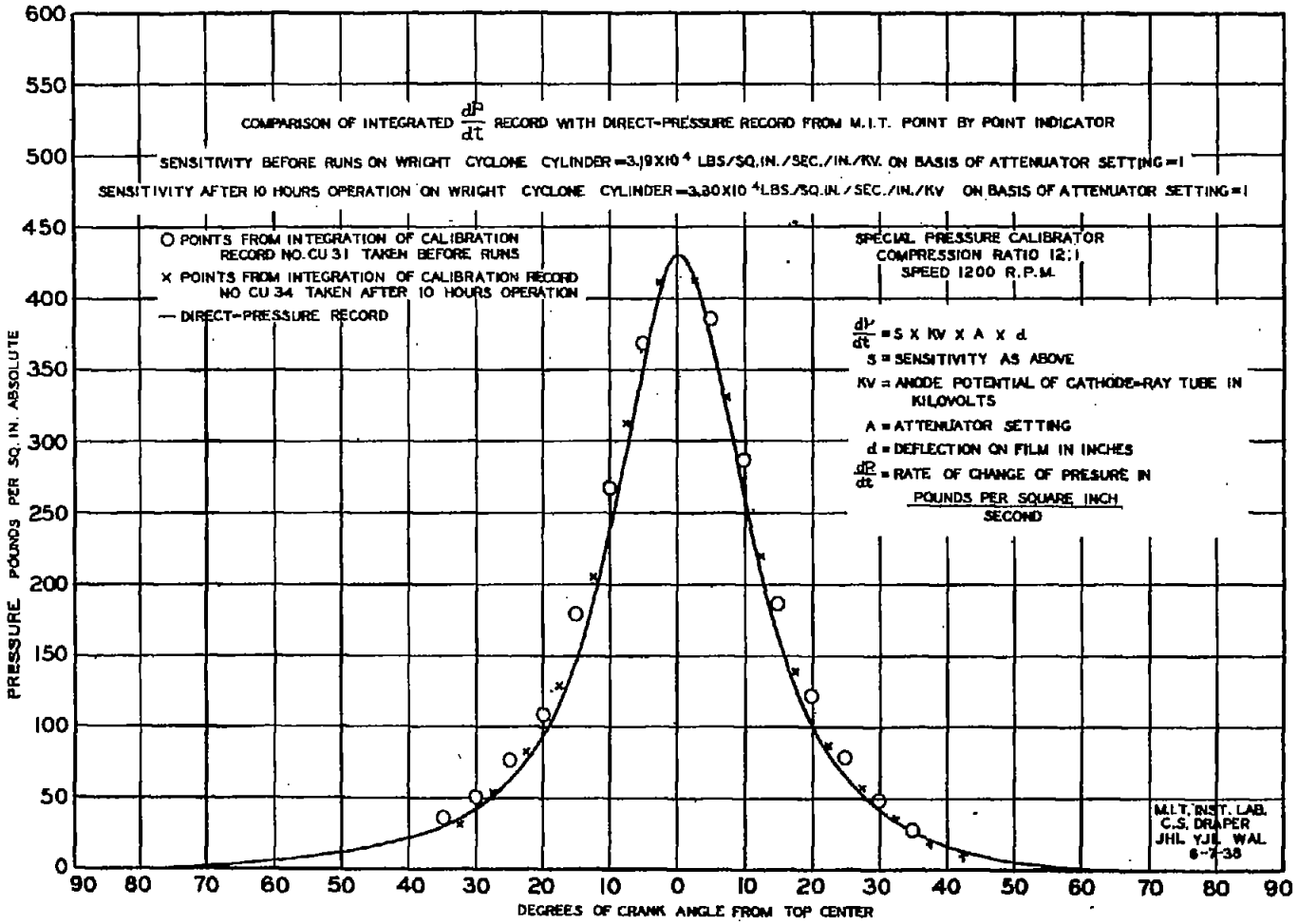

OVERALL CALIBRATION OF PRESSURE UNIT CONNECTED TO AMPLIFIER CHANNEL NO. 1.

FIG. 29

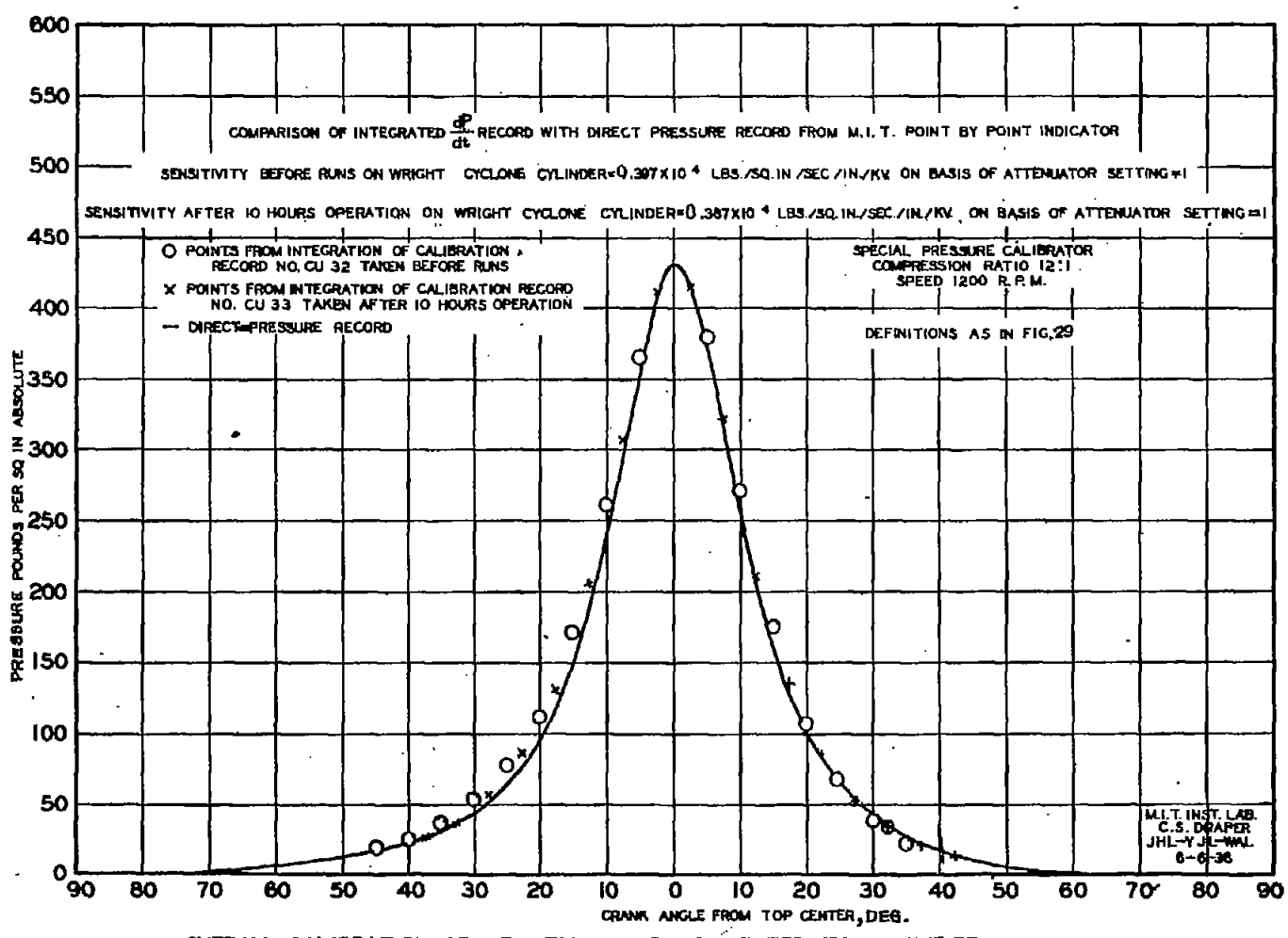

OVERALL CALIBRATION OF VIBRATION UNIT CONNECTED TO AMPLIFIER CHANNEL NO. 2
FIG.30

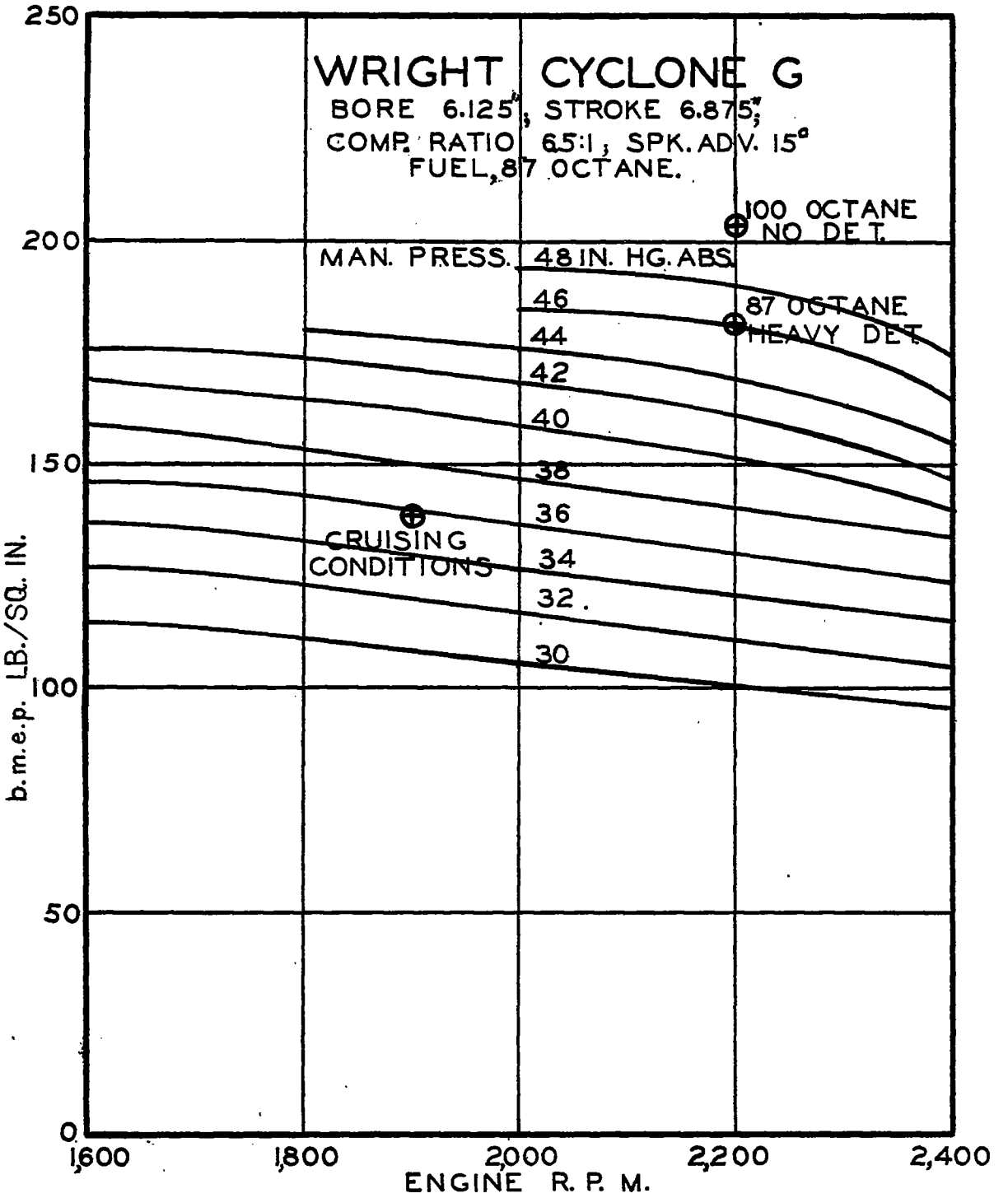

PERFORMANCE CURVES.

FIG. 31

FIG. 32.- INSTALLATION OF PRESSURE UNIT "A" IN A REGULAR SPARK-PLUG HOLE.

FIGURE 33.- INSTALLATION OF VIBRATION UNIT.

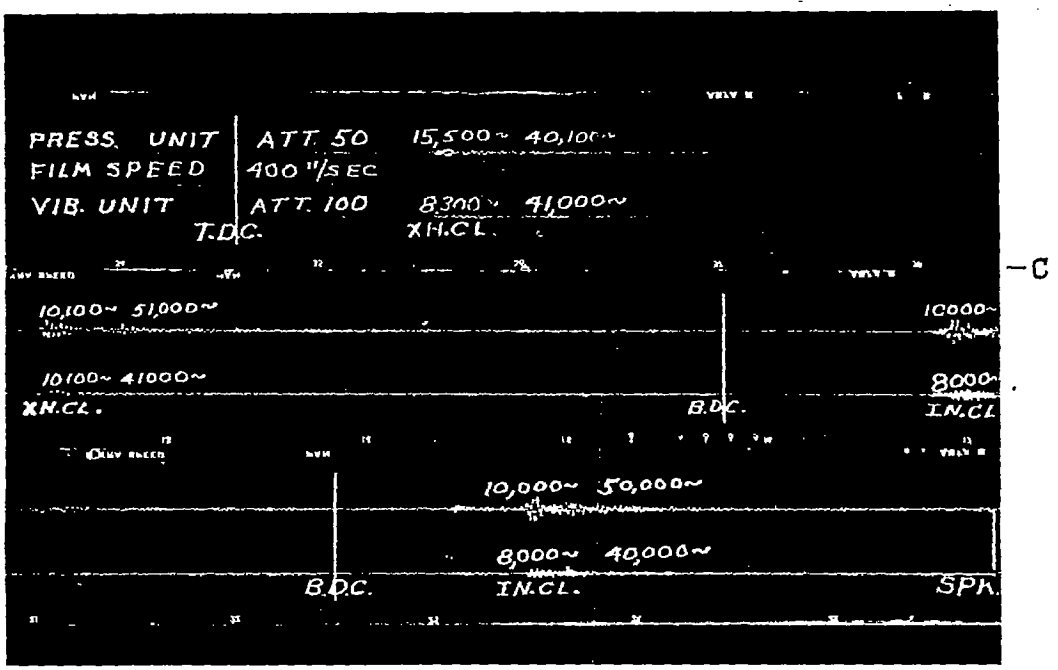

(Continued below)

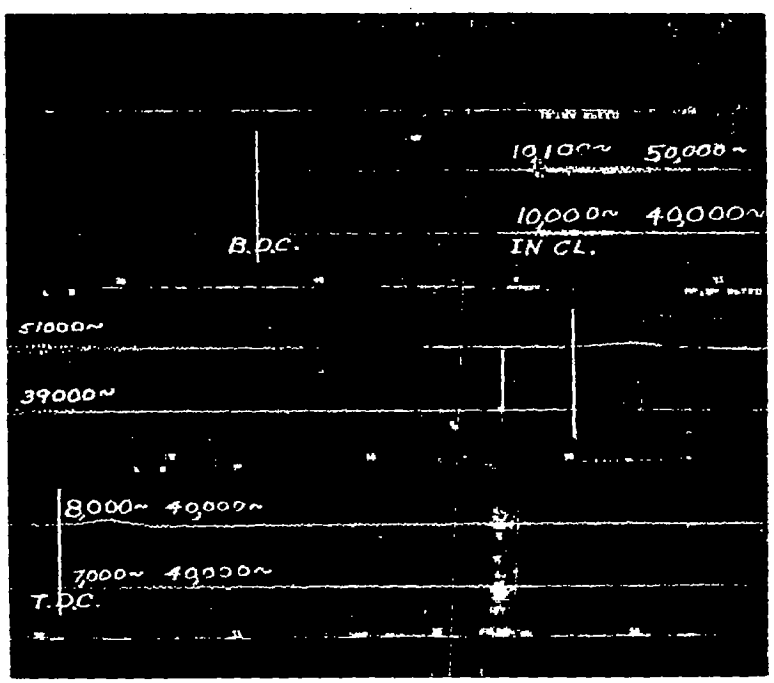

Fig. 34.- Effect of speed.

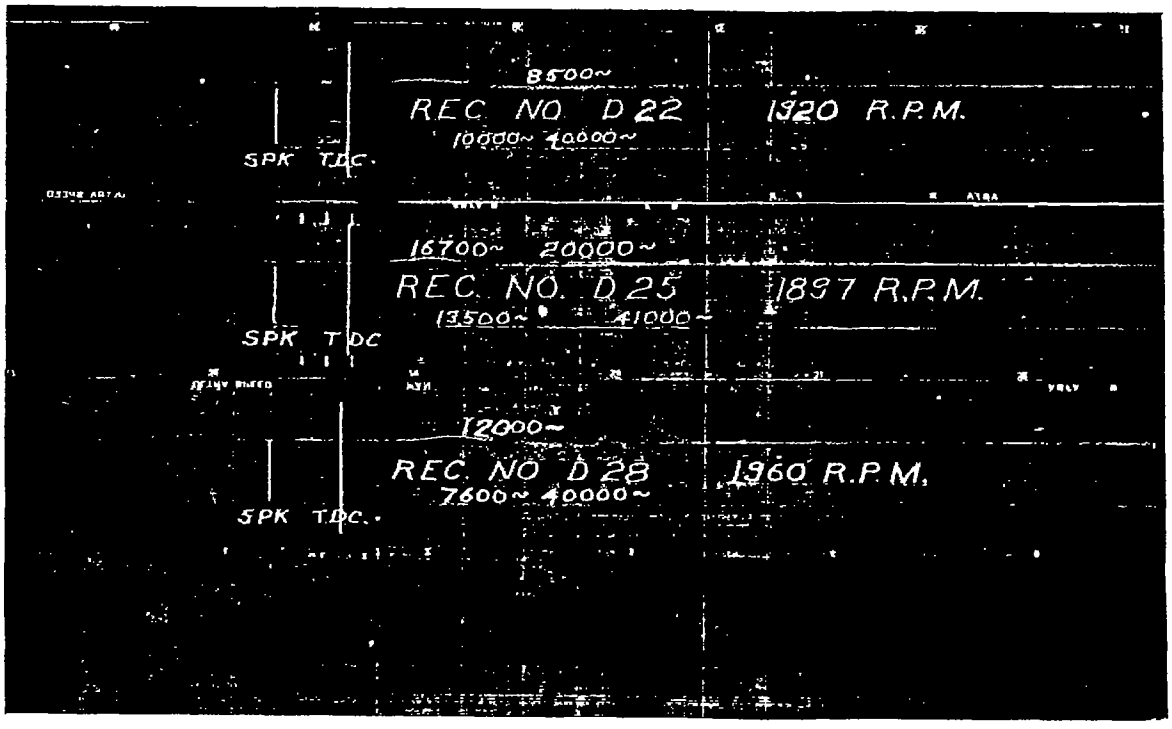

(Continued below)

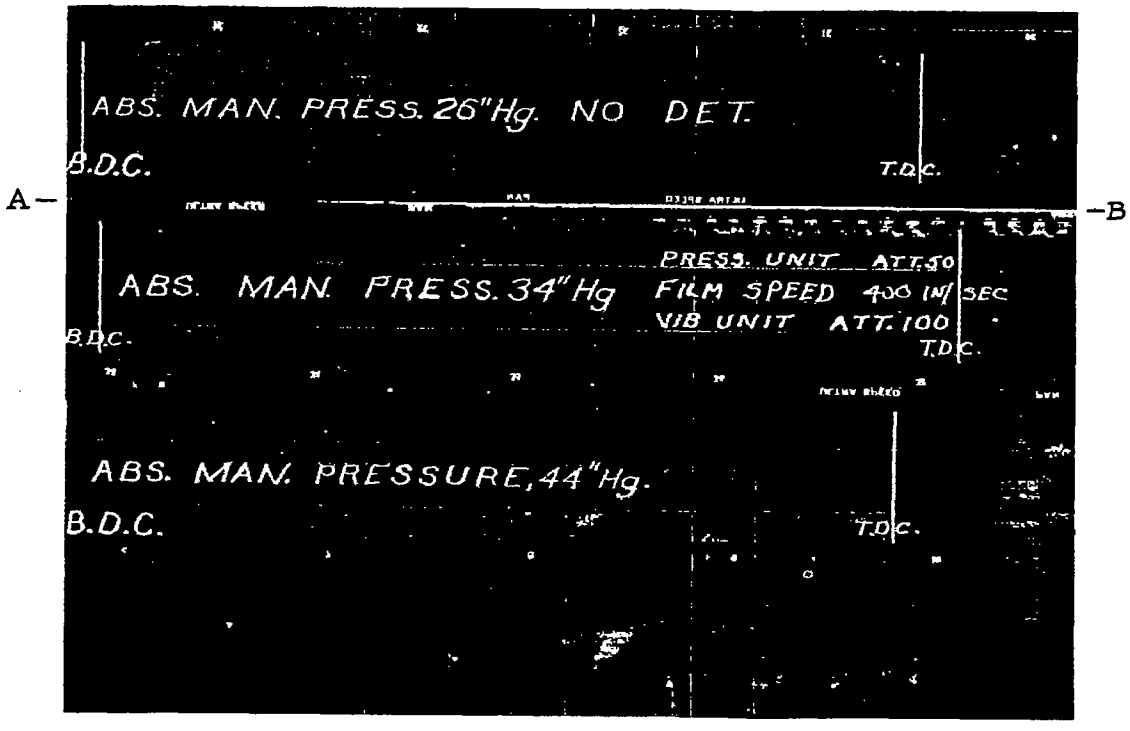

Fig. 35.- Effect of supercharging. (Continued on following page)

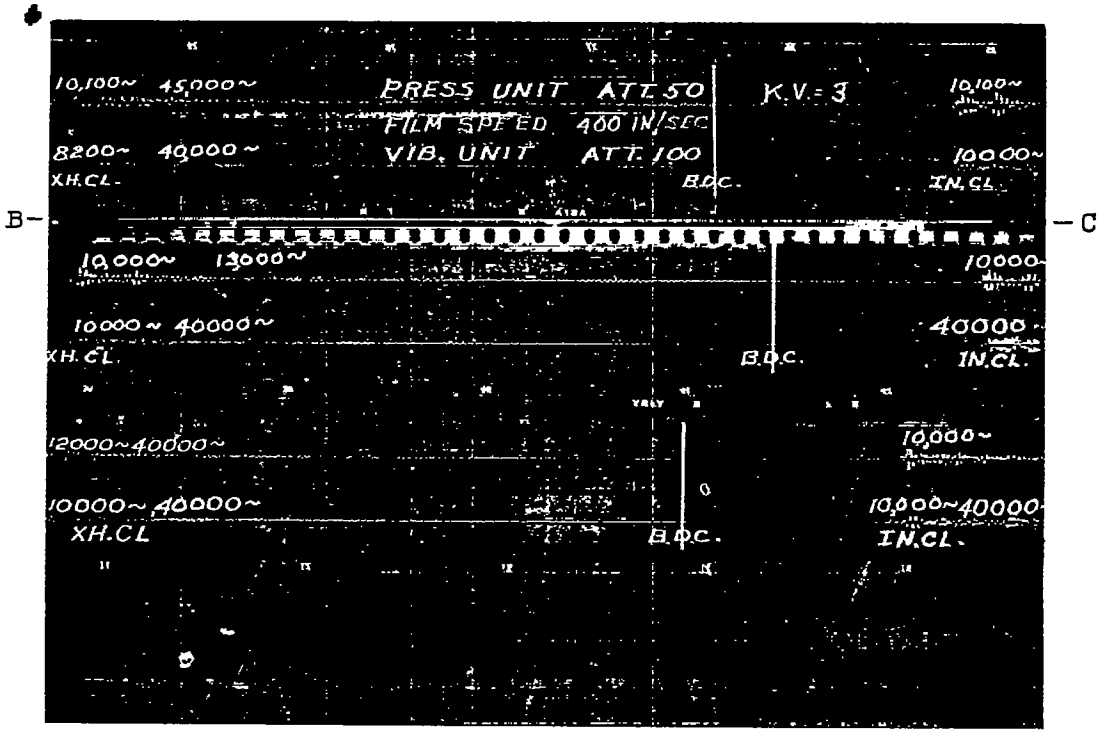

(Continued below)

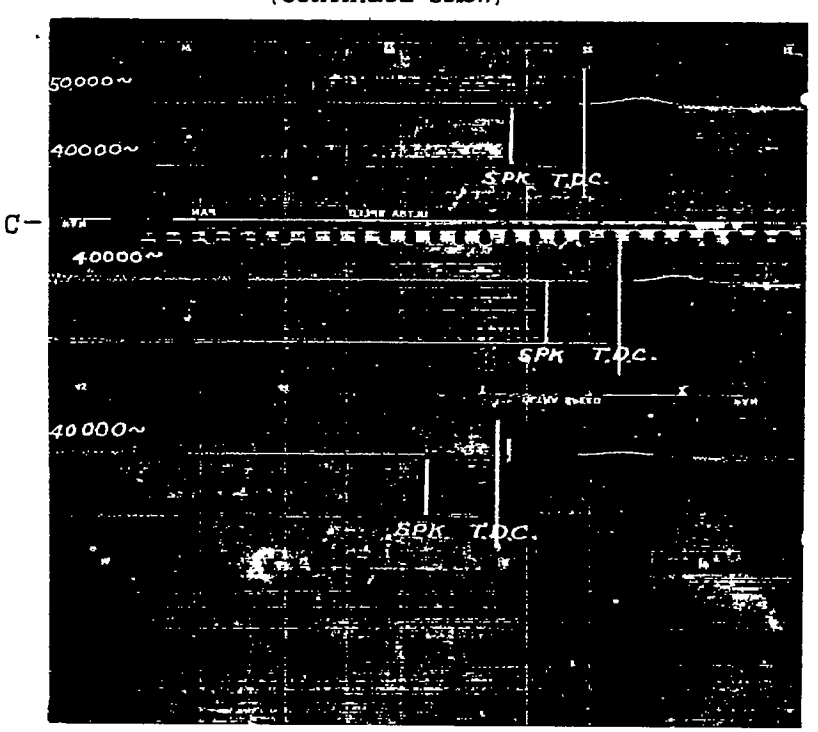

Fig. 35.- Effect of supercharging.

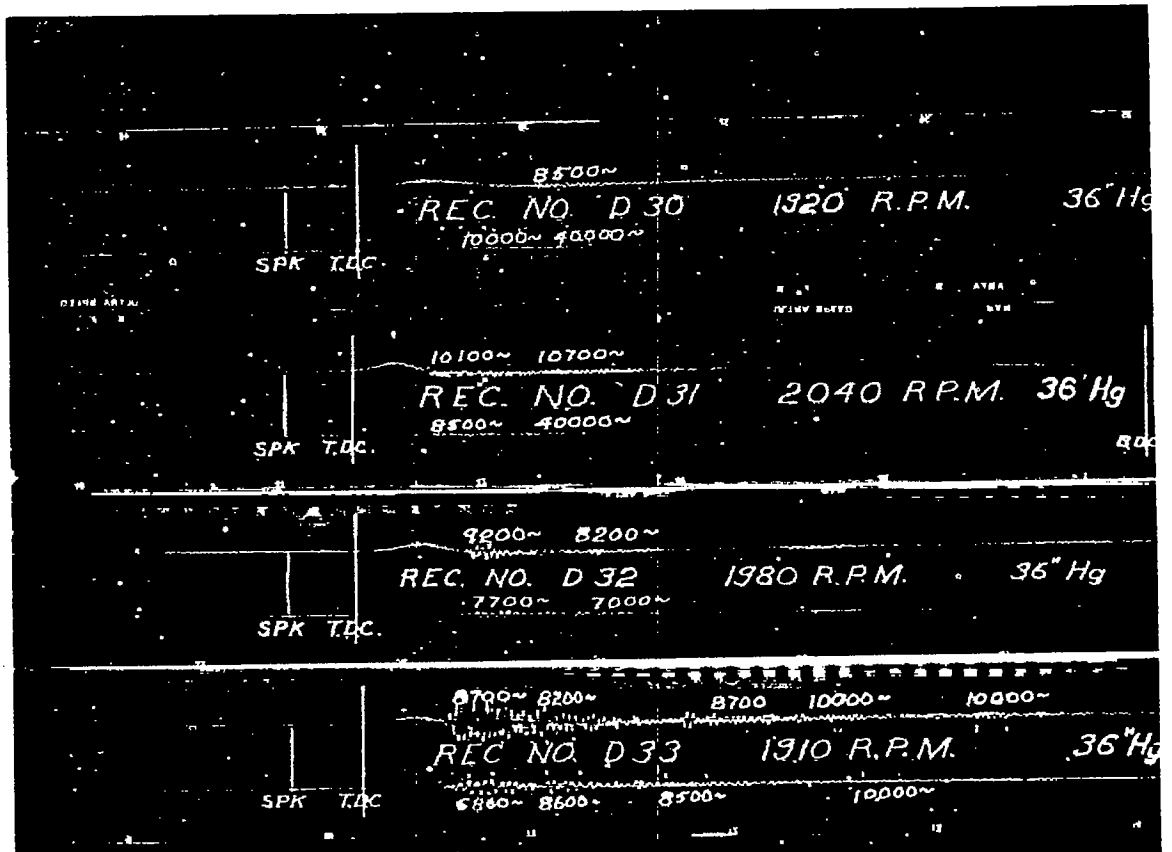

Fig. 36.- Effect of detonation.

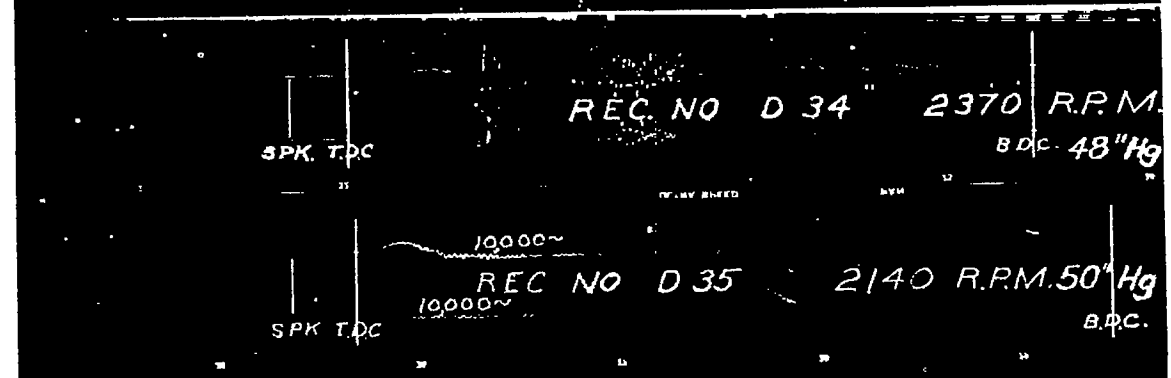

Fig. 37.- Detonation at high output.

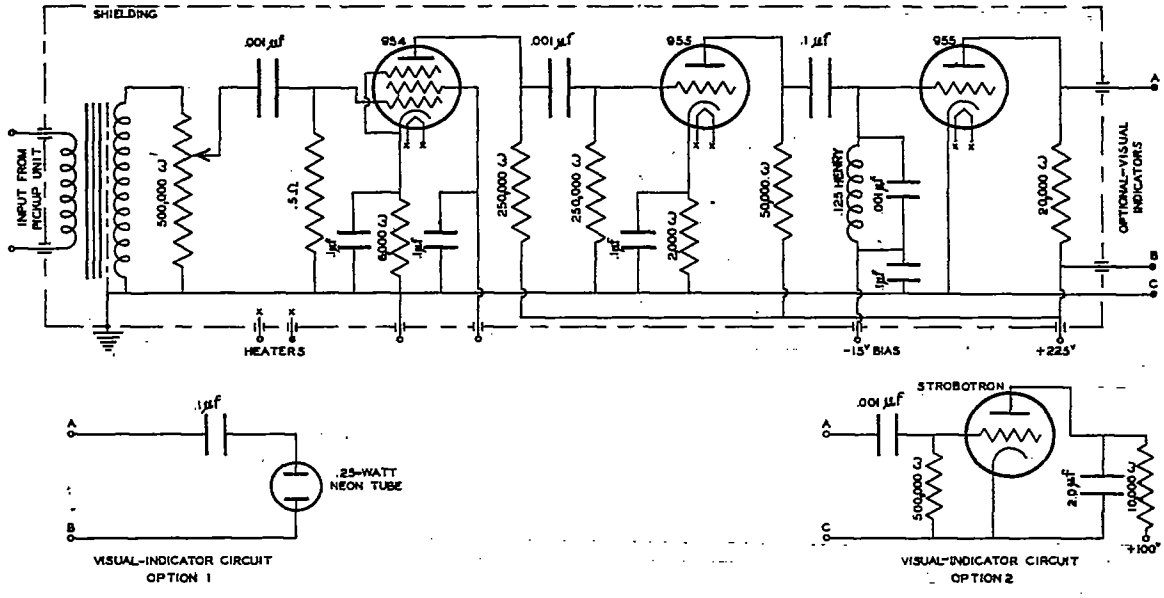

CIRCUIT DIAGRAM OF DETONATION-DETECTOR AMPLIFIER.

FIG. 38

M.I.T. INST. LAE
C. S. DRAPER
JHL-WAL
6-2-38

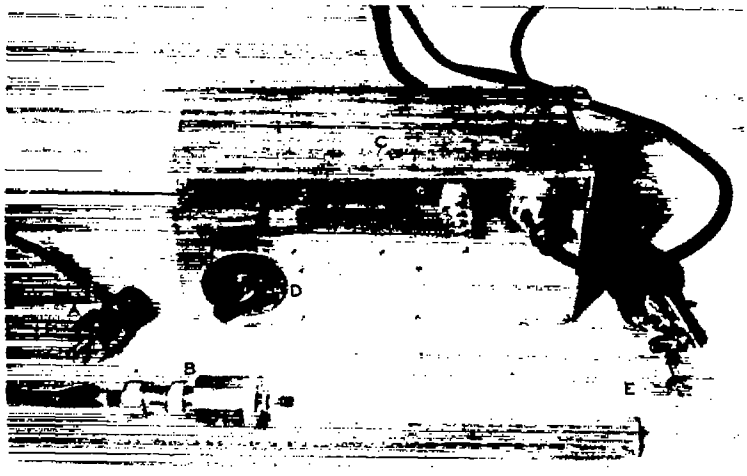

FIGURE 39.- COMPLETE DETONATION DETECTOR.
A, VIBRATION PICKUP B, PICKUP OF DIFFERENT DESIGN.
C, SELECTIVE AMPLIFIER. D, GAIN CONTROL. E, NEON LIGHTS.