DEC 23 1946

NATIONAL ADVISORY COMMITTEE FOR AERONAUTICS

WARTIME REPORT

ORIGINALLY ISSUED

September 1944 as
Advance Restricted Report E4I15

EFFECT OF SEVERAL METHODS OF INCREASING KNOCK-LIMITED POWER ON CYLINDER TEMPERATURES

By Harvey A. Cook, Jack E. Vandeman, and
Kenneth D. Brown

Aircraft Engine Research Laboratory
Cleveland, Ohio

FOR REFERENCE

NOT TO BE TAKEN FROM THIS ROOM

NACA

NACA LIBRARY
LANGLEY MEMORIAL AERONAUTICAL
LABORATORY
Langley Field, Va.

WASHINGTON

NACA WARTIME REPORTS are reprints of papers originally issued to provide rapid distribution of advance research results to an authorized group requiring them for the war effort. They were previously held under a security status but are now unclassified. Some of these reports were not technically edited. All have been reproduced without change in order to expedite general distribution.

NASA Technical Library
3 1176 01403 3014

NATIONAL ADVISORY COMMITTEE FOR AERONAUTICS

ADVANCE RESTRICTED REPORT

EFFECT OF SEVERAL METHODS OF INCREASING KNOCK-LIMITED POWER ON CYLINDER TEMPERATURES

By Harvey A. Cook, Jack E. Vandeman, and
Kenneth D. Brown

SUMMARY

Object. - To determine the effect of several methods of increasing the knock-limited power on critical cylinder temperatures.

Scope. - The knock-limited indicated horsepower and the cylinder temperatures were determined for a Wright R-2600-8 cylinder under the following engine operating conditions:

Operating condition	Basic value	Range studied
Fuel-air ratio	0.075	0.054 to 0.117
Inlet-air temperature, °F	200	82 to 312
Water-fuel ratio	0.0	0.0 to 0.6
Cooling-air pressure drop Δp across cylinder, in. water	15	5 to 30
Engine speed, rpm	2100	1500 to 2500
Spark advance, both plugs, deg B.T.C.	20	15 to 40

Each operating condition was varied in turn over the range listed while the other quantities were maintained at the basic values. At these basic operating values, the knock-limited indicated horsepower was approximately 128. The following temperature measurements are given: rear spark-plug bushing, middle rear barrel, exhaust-valve crown, front spark-plug electrode, rear spark-plug electrode, and exhaust gas. The data presented relate the knock-limited indicated power and the engine temperatures.

Summary of results. - The results are summarized in the following table:

Value at which maximum knock-limited power was recorded for each operating condition	Maximum knock-limited indicated horsepower	Engine temperature, °F			
		Rear spark-plug bushing	Middle rear barrel	Exhaust-valve crown	Rear spark-plug electrode
Basic value (approx.)	128	422	327	1255	1151
Fuel-air ratio, 0.09	140	403	315	1172	1064
Inlet-air temperature, 82° F	155	430	338	1250	1160
Water-fuel ratio, 0.6	166	368	322	1180	1049
Cooling-air pressure drop Δp, 30 in. water	135	397	308	1260	1155
Engine speed, 2500 rpm	141	437	336	1285	1170
Spark advance, 15° B.T.C.	130	427	333	1270	1152

Conclusions. - Within the scope of the tests, the following conclusions are of particular interest:

1. From the consideration of external and internal cylinder temperatures, the most satisfactory method of increasing the knock-limited power was by internal cooling with water and the least satisfactory was by increasing the engine speed.

2. As the knock-limited power was increased by lowering the inlet-air temperature, neither the external nor the internal cylinder temperatures were appreciably increased.

INTRODUCTION

Two of the factors that determine the power limit of an air-cooled aircraft engine are the cooling requirements of the engine and the knock limit of the fuel in relation to the engine. Assuming a particular fuel, an increase in knock-limited power may be effected through the change of several engine conditions, of which the most important are:

Fuel-air ratio
Inlet-air temperature
Internal coolant
Cooling-air flow
Engine speed
Spark timing

In evaluation of each of these six conditions on the basis of engine knock, consideration must be given to their effect on cylinder temperatures at knock-limited power. Two sets of cylinder temperatures are of interest - external and internal. The external temperatures are used in flight to determine whether the engine is adequately cooled. The limiting values of these temperatures are based on the manufacturer's specifications for safe operation of the engine. Certain internal cylinder temperatures, namely, the exhaust valve (reference 1) and the spark-plug electrodes bear no direct relationship to the external cylinder temperatures. These temperatures are important because of their relationship to engine durability and because they are potential sources of preignition if the temperatures are not adequately controlled. Data on the relation of cylinder-head temperatures to knock-limited power have been presented to the Coordinating Research Council by Pratt & Whitney Aircraft Corporation. The effects of internal coolants on knock-limited and temperature-limited power are given in reference 2.

In the present report, tests are described in which the knock-limited power was determined as a function of each of the previously listed six engine conditions. For each test the following temperatures are presented: rear spark-plug bushing, middle rear barrle, exhaust-valve crown, front spark-plug electrode, rear spark-plug electrode, and exhaust gas.

This investigation was conducted in November 1943 at the Aircraft Engine Research Laboratory of the NACA at Cleveland, Ohio.

APPARATUS AND PROCEDURE

The data for this report were obtained on a Wright R-2600-8 front-row cylinder fitted with standard baffles and mounted on a CUE crankcase (figs. 1 and 2). A Stancal pickup unit and an oscillograph were used for indication of knock.

The cylinder temperatures were measured by thermocouples located as shown in figure 3. Only the temperatures listed in the preceding section are presented because they are considered to represent the critical locations.

The rear spark-plug-bushing temperature was measured by an iron-constantan thermocouple peened into a hole drilled 1/4 inch deep along the bushing threads. Iron-constantan thermocouples on the barrel were spot-welded to the outside surface between the fins. The chromel-alumel thermocouples in the spark plugs were peened in holes drilled in the center electrode to within 1/16 inch of the

combustion-chamber end of C34S spark plugs. The method of installing a thermocouple in the exhaust-valve crown was similar to that reported in reference 1. An iron-constantan thermocouple was formed by welding a constantan wire in the end of a stainless-steel tube that was inserted through a hole drilled in the tip of the valve stem. The thermocouple was inserted in a hole drilled to within 1/16 inch of the outside surface of the crown and the valve was sealed with the original amount of sodium. The exhaust-gas thermocouple was located in the center of the exhaust-gas stream in an Inconel tube extending across the exhaust stack at the flange.

In the tests with an internal coolant, a continuous spray of water was injected at a pressure of 100 pounds per square inch through the intake-manifold primer hole (fig. 4).

During the tests all of the engine operating conditions were held constant except the inlet-air pressure and the condition being tested. For each test the condition was changed and the inlet-air pressure was increased until incipient knock was encountered. The range over which each condition was varied (table 1) was determined by rough operation, limitations of the equipment, or maximum cylinder temperatures recommended for take-off power (480° F for the rear spark-plug bushing).

TABLE 1. - ENGINE OPERATING CONDITIONS, BASIC VALUES, AND RANGE STUDIED FOR EACH

[Fuel, AN-F-28; oil-in temperature, 185° F; cooling-air temperature, 85° F; compression ratio, 6.9]

Operating condition	Basic value[a]	Range studied
Engine speed, rpm	2100	1500 to 2500
Combustion-air temperature, °F	200	82 to 312
Cooling-air pressure drop Δp across cylinder, in. water	15	5 to 30
Spark advance, both plugs, deg B.T.C.	20	15 to 40
Fuel-air ratio	0.075	0.054 to 0.117
Water-fuel ratio	0.0	0.0 to 0.6

[a]The value at which the engine condition was held constant during tests of each of the other conditions.

RESULTS

Engine Performance at Knock-Limited Power

The change in knock-limited power with a variation in the different operating conditions is shown in figure 5. The knock-limited indicated horsepower at the basic conditions was 126 except for the runs during the water-injection tests, for which it was 131. Because of some possible action of the injected water in removing cylinder deposits or some other effect, the basic condition for the water-injection tests ($W/F = 0$) resulted in 5 horsepower more than did the basic conditions with the other tests. Of the several methods of increasing the knock-limited power and for the range of each condition investigated, water injection permitted the highest power and lowering the inlet-air temperature the next highest.

The variations of indicated specific fuel and liquid consumptions, inlet-air pressure, and combustion-air flow with indicated horsepower are shown in figure 6 for all test conditions. From this figure it may be seen that, upon varying any of the conditions except fuel-air ratio or spark advance, the indicated specific fuel consumption remained practically constant. For water injection the indicated specific liquid consumption increased. Higher inlet-air pressures were required for increased power with water injection than with lowered combustion-air temperature. The curves of combustion-air flow show a straight-line relation with indicated horsepower except for the fuel-air-ratio and the spark-advance tests.

Engine Temperatures at Knock-Limited Power

The quantities designated ΔT in this report are the differences between the temperature in question and the cooling-air temperature, which was held constant at 85° F. The relation of cylinder temperatures to knock-limited indicated horsepower is shown in figures 7 to 12 for the ranges of operating conditions shown in figure 5.

Fuel-air ratio. - Through a range of fuel-air ratios from 0.066 to 0.09, the variation in engine temperatures was small even though the knock-limited indicated horsepower increased 25 percent. For this range of operation the increased cooling of the gases through mixture enrichment nearly compensated for the increased heat load caused by the rise in power. The exhaust-gas temperature reached a maximum at a fuel-air ratio of 0.066.

At mixtures leaner than 0.066 or richer than about 0.08, considerable change in the engine temperatures occurred with little change in the knock-limited indicated horsepower, as shown in table 2.

TABLE 2

EFFECT OF FUEL-AIR RATIO AT CONSTANT VALUES OF KNOCK-LIMITED INDICATED HORSEPOWER ON CYLINDER TEMPERATURES, SPECIFIC FUEL AND AIR CONSUMPTIONS, AND MANIFOLD PRESSURE

Fuel-air ratio	Temperature, °F					Indicated specific fuel consumption (lb/hp-hr)	Indicated specific air consumption (lb/hp-hr)	Manifold pressure (in. Hg absolute)
	Rear spark-plug bushing	Middle rear barrel	Exhaust valve	Rear spark-plug electrode	Front spark-plug electrode			
Knock-limited indicated horsepower, 135								
0.08	423	324	1267	1132	1131	0.46	5.74	51
.107	361	304	970	915	879	.66	6.15	54
Knock-limited indicated horsepower, 108								
0.066	408	317	1285	1115	1113	0.37	5.76	42
.055	370	301	1130	958	950	.38	6.75	48

Two values of knock-limited indicated horsepower are tabulated, one in the rich and one in the lean region. The data indicate the degree to which engine cooling, together with knock control, can be accomplished through mixture enriching at high fuel-air ratios and through mixture leaning at low fuel-air ratios. In the rich region, this engine cooling is accomplished at the expense of indicated specific fuel and air consumptions and, in the lean region, at the expense of indicated specific air consumption.

For a more complete evaluation of these data the information should be translated into terms of brake specific fuel consumption and effect of decreased engine temperatures on cooling horsepower under flight conditions. The uniformity of mixture distribution in relation to the ability of the engine to be operated at a mixture ratio of 0.055 is also of importance. For the data in the rich region the relationship, as tabulated, is dependent upon the effect of the engine operating conditions on the peak of the knock-limited curve and on the slope of the curve on each side of the peak. In the lean region the fuel-air ratio at which the minimum knock-limited indicated horsepower occurs is independent of the engine operating conditions but the slopes of the curve are not.

Inlet-air temperature. - The 50-percent increase in knock-limited indicated horsepower permitted by decreasing the inlet-air temperature from 312° F to 82° F was not accompanied by excessive engine-temperature increases; the external cylinder temperatures increased

about 25° F and the internal cylinder temperatures about 75° F or less. The temperature of the exhaust-valve crown reached a maximum at an inlet-air temperature of about 200° F. The data indicate that increasing the knock-limited power by the use of an aftercooler will not greatly increase the external-cooling requirements of the engine. The cooling requirements of the aftercooler are not considered here.

Water injection. - The use of water as an internal coolant over the range tested permitted a 27-percent increase in knock-limited power for a 54-percent increase in indicated specific liquid consumption (the indicated specific fuel consumption remained constant). This increase in knock-limited power was accompanied by a decrease of 15° F in the barrel temperature, 70° F in the rear spark-plug bushing temperature, and about 140° F in the internal cylinder temperatures. The decreased engine temperatures would permit a decrease in the external cooling of the engine. The decrease in the internal cylinder temperatures is of interest because of the difficulty of cooling these locations through external-cooling methods.

Cooling-air flow. - Increasing the cooling-air pressure drop from 5 to 30 inches of water permitted an increase of 23 percent in the knock-limited power with a marked drop of the external temperatures but with little change of the internal temperatures.

In evaluation of the data in relation to the airplane in flight, two factors must be considered: the pressure drop available and the cooling horsepower required as a function of the pressure drop.

Engine speed. - Of all the methods presented to increase the knock-limited power, increasing the engine speed was the least satisfactory from the consideration of engine temperatures. All cylinder temperatures, both external and internal, increased approximately linearly with the increase in knock-limited power. These increases in external temperatures would be reflected in practice by an increase in the cooling horsepower required to keep the external temperatures within operating limits; the internal temperatures measured would be little affected by increasing the external cooling of the cylinder.

Spark timing. - Retarding the spark timing from 20° to 15° B.T.C. for both plugs resulted in a slight increase in knock-limited power with only a very small change in the cylinder temperatures. Advancing the spark timing from 20° to 40° B.T.C. for both plugs resulted in a reduction in knock-limited power with a large increase in most cylinder temperatures. The temperature of the middle rear barrel

decreased to a minimum at a spark advance of about 25° B.T.C. and then increased greatly. The engine operated irregularly for spark timings later than 15° B.T.C., which necessitated an advance in spark timing to observe the trend.

CONCLUSIONS

From tests made on an air-cooled aircraft-engine cylinder to determine the effect of various methods of increasing knock-limited power on cylinder temperatures, the following conclusions can be drawn:

1. From the consideration of external and internal cylinder temperatures, the most satisfactory method of increasing the knock-limited power was by internal cooling with water and the least satisfactory was by increasing the engine speed.

2. As the knock-limited power was increased by lowering the inlet-air temperature, neither the external nor the internal cylinder temperatures were appreciably increased.

Aircraft Engine Research Laboratory,
National Advisory Committee for Aeronautics,
Cleveland, Ohio.

REFERENCES

1. Sanders, J. C., Mulcahy, B. A., and Peters, M. D.: Some Factors Affecting Failures of Exhaust Valves in an Air-Cooled Cylinder. NACA ARR No. 4A19, 1944.

2. Wear, Jerrold D., Held, Louis F., and Slough, James W.: Some Effects of Internal Coolants on Knock-Limited and Temperature-Limited Power as Determined in a Single-Cylinder Aircraft Test Engine. NACA ARR No. E4H31, 1944.

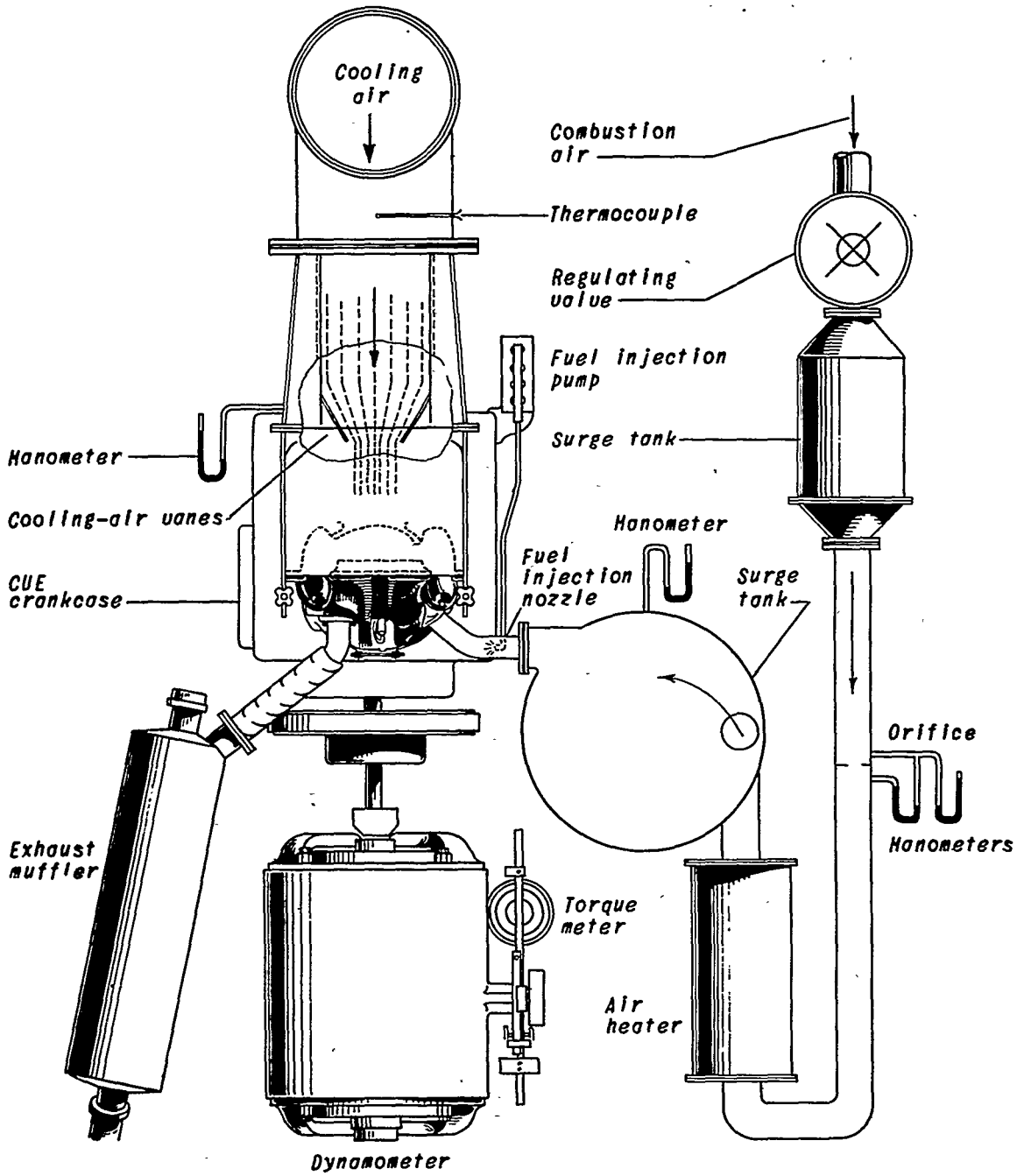

NATIONAL ADVISORY COMMITTEE FOR AERONAUTICS

Figure 1. - Wright R-2600-8 single cylinder test engine setup.

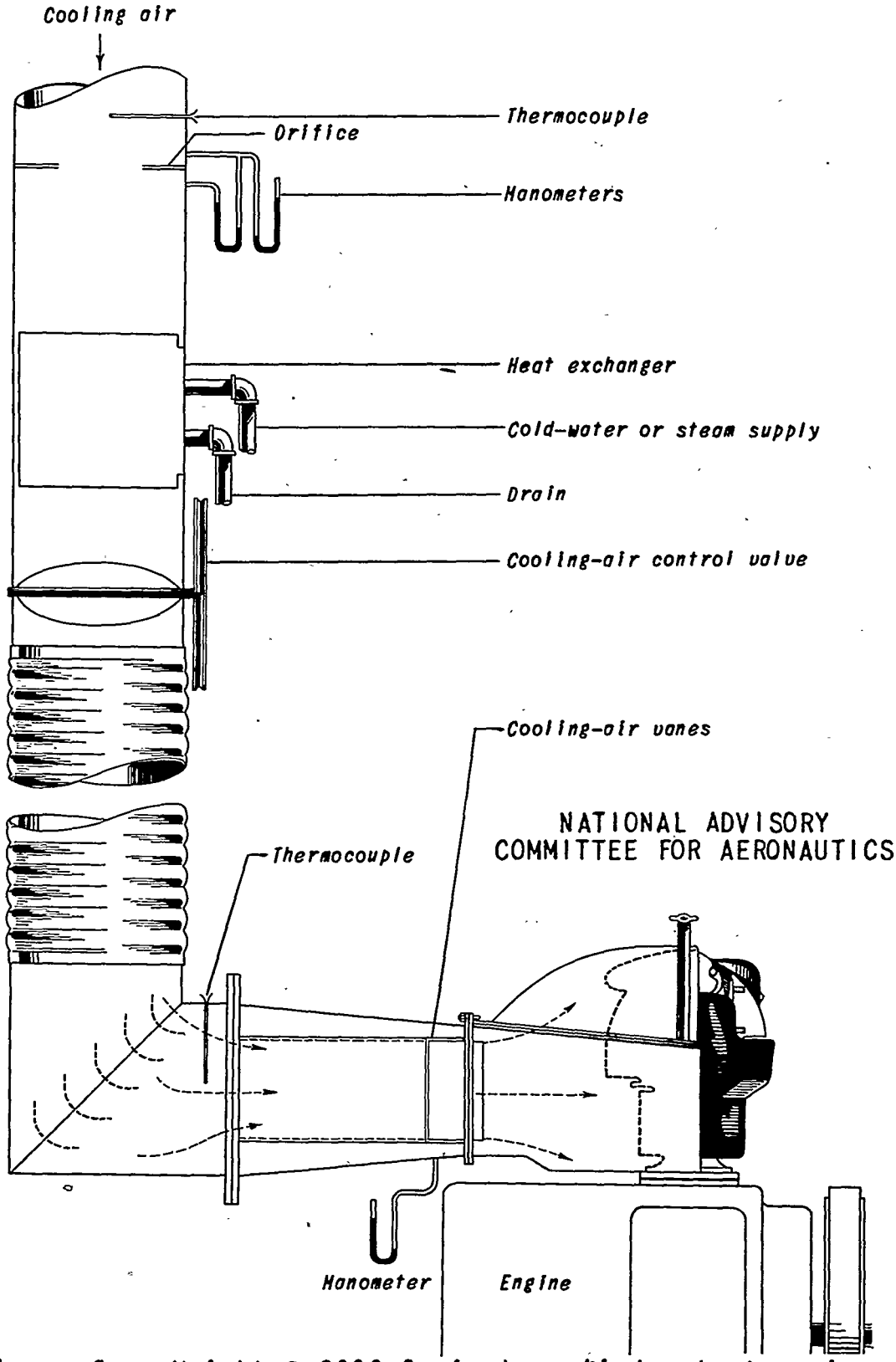

Figure 2. - Wright R-2600-8 single cylinder test-engine-cooling-air system.

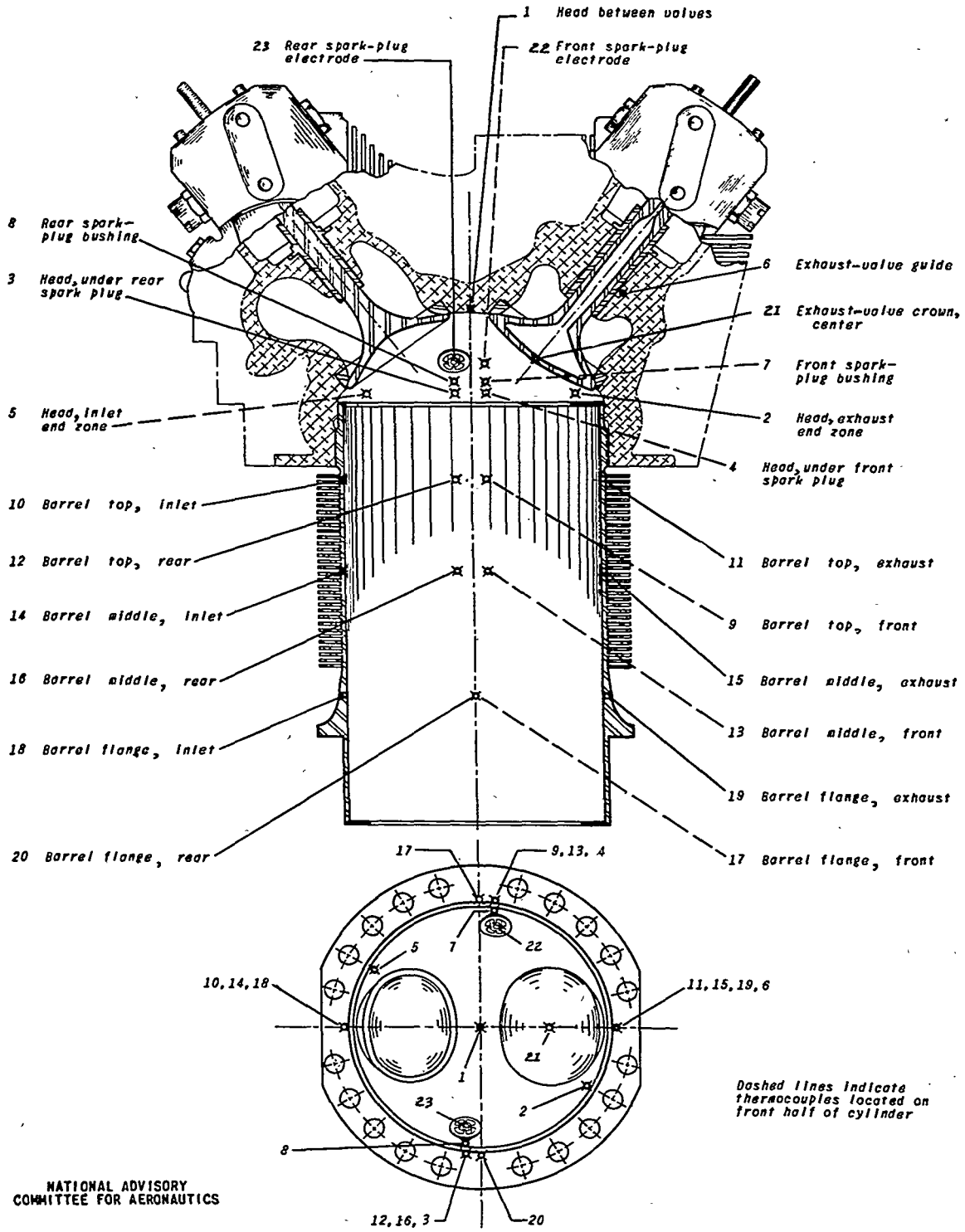

Figure 3. - Location of the thermocouples on Wright R-2600-8 cylinder.

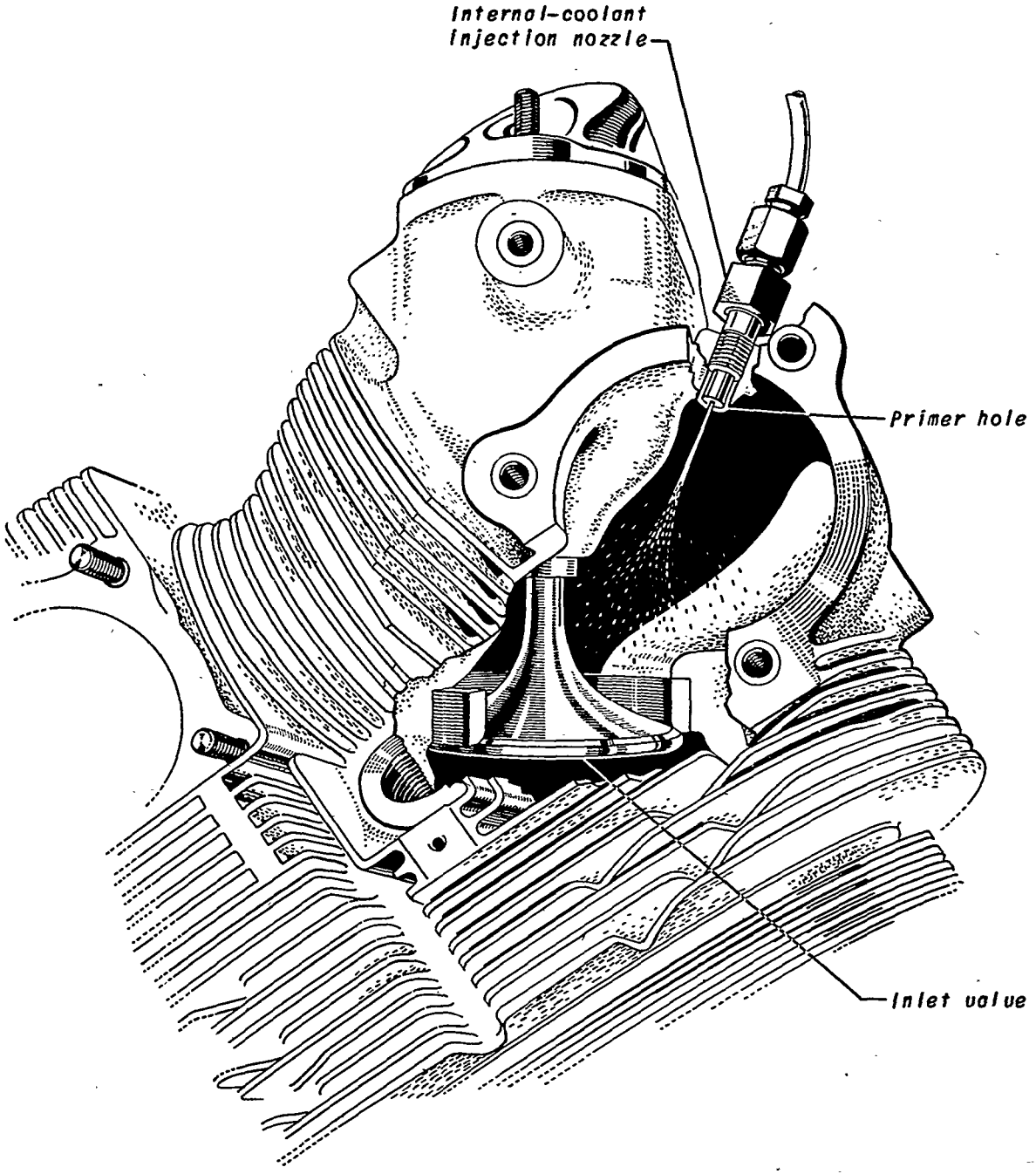

NATIONAL ADVISORY
COMMITTEE FOR AERONAUTICS

Figure 4. - Internal-coolant injection nozzle in Wright R-2600-8 cylinder.

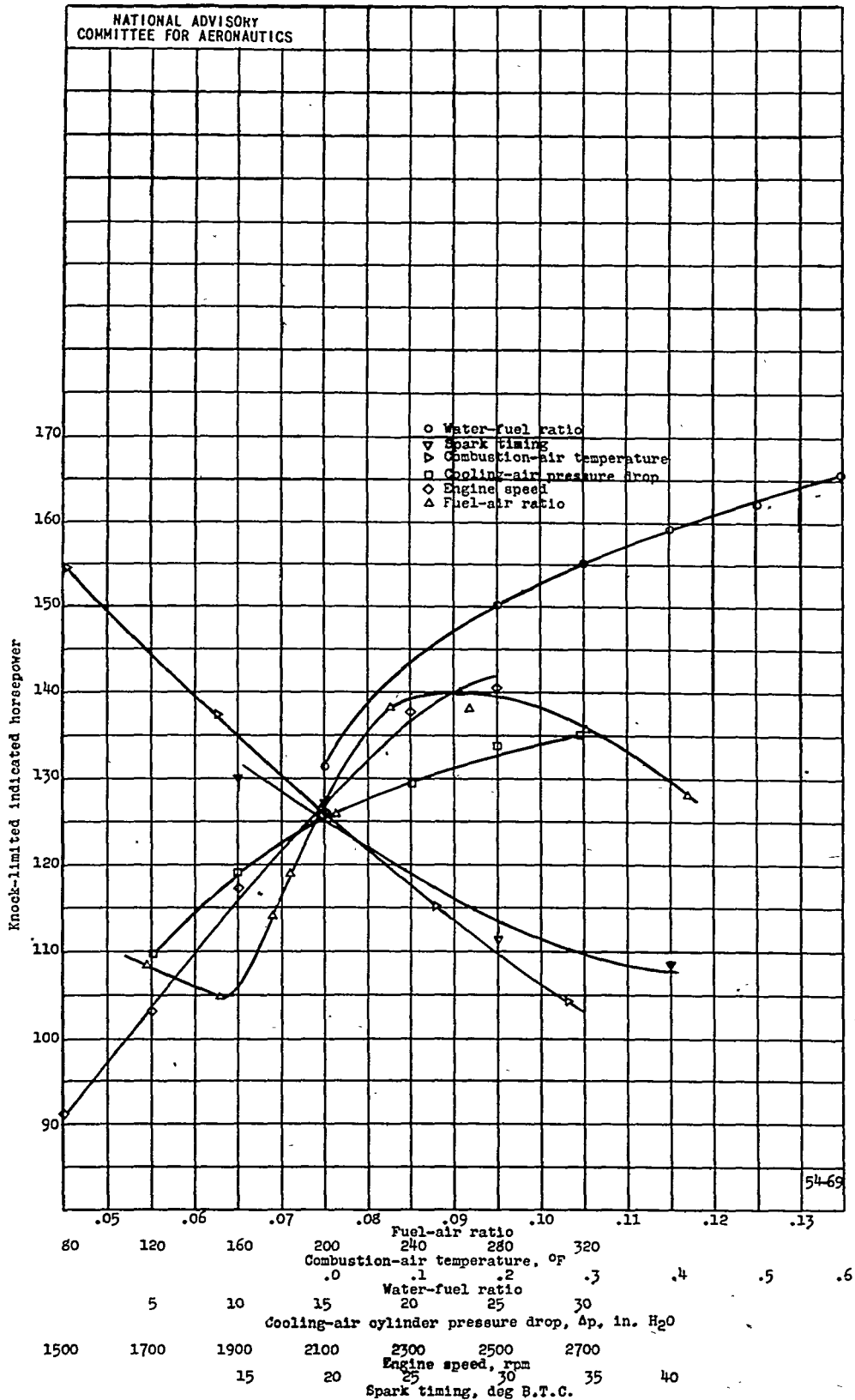

Figure 5. - Variation of knock-limited indicated horsepower with fuel-air ratio, inlet-air temperature, water injection, cooling-air flow, engine speed, and spark timing. Wright R-2600-8 front-row cylinder; fuel, AN-F-28; compression ratio, 6.9; cooling-air temperature, 85° F; oil-in temperature, 185° F.

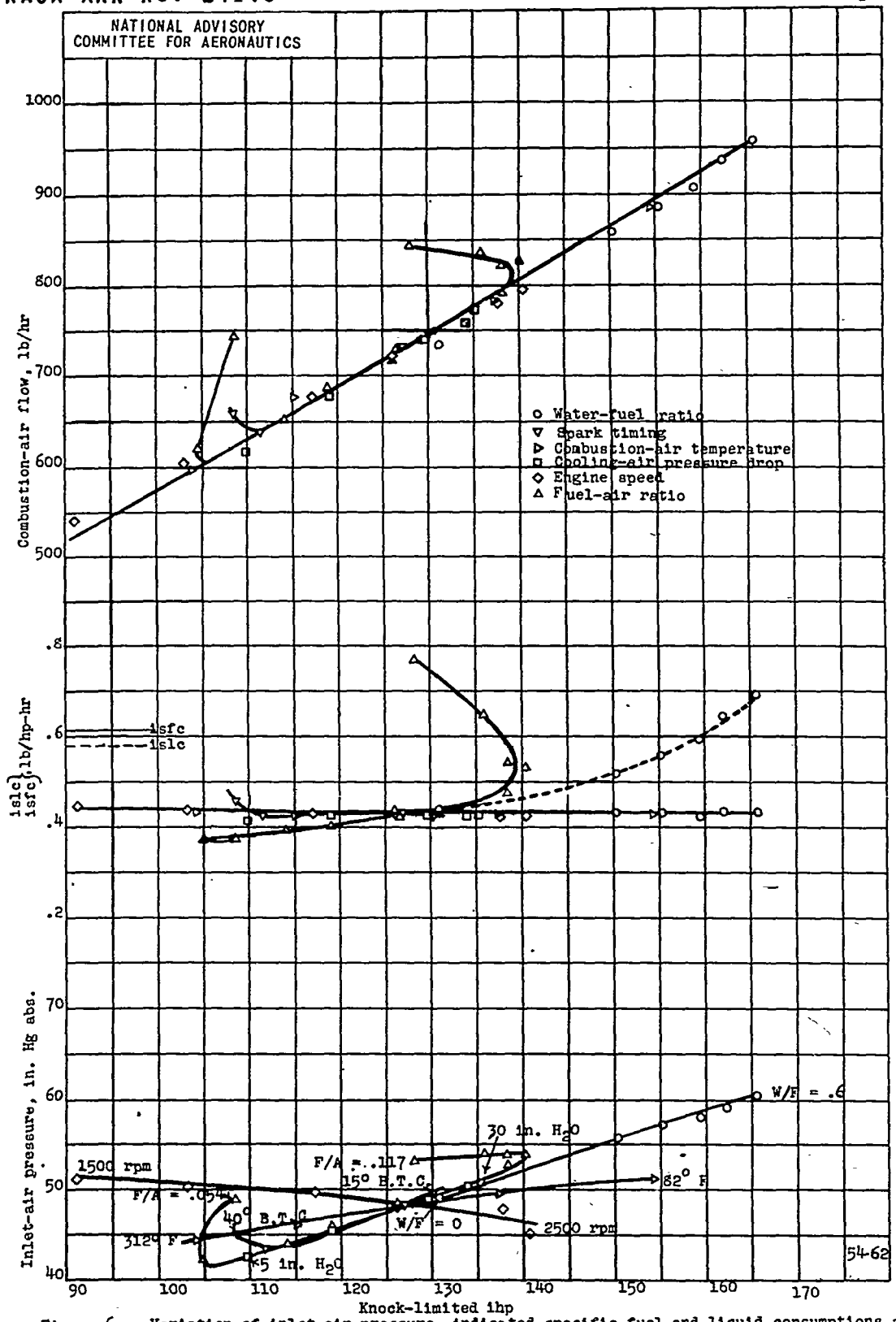

Figure 6. - Variation of inlet-air pressure, indicated specific fuel and liquid consumptions, and combustion-air flow with knock-limited indicated horsepower for varying operating conditions. Wright R-2600-8 front-row cylinder; fuel, AN-F-28; compression ratio, 6.9; cooling-air temperature, 85° F; oil-in temperature, 185° F.

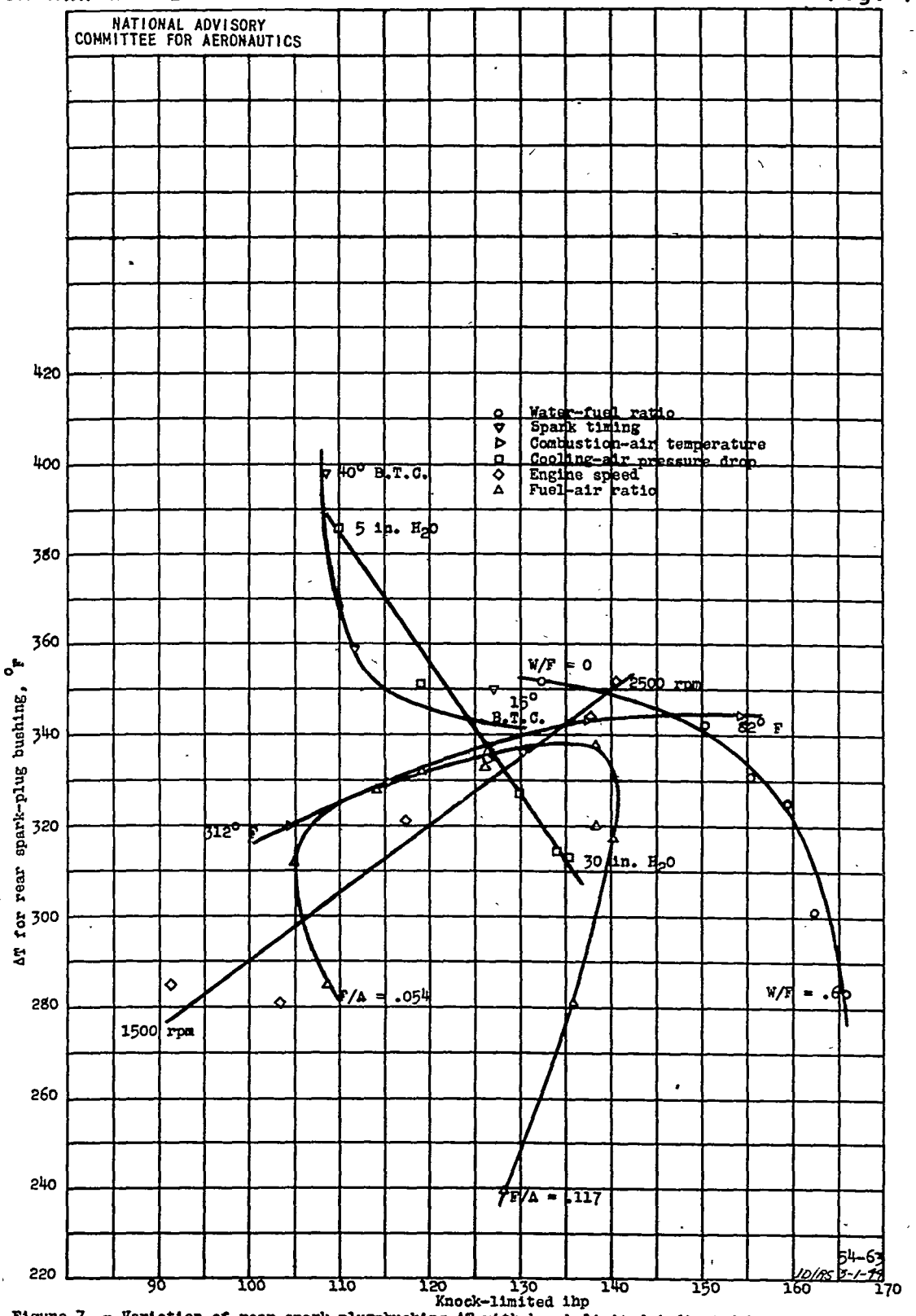

Figure 7. - Variation of rear spark-plug-bushing ΔT with knock-limited indicated horsepower for varying operating conditions. Wright R-2600-8 front-row cylinder; fuel, AN-F-28; compression ratio, 6.9; cooling-air temperature, 85° F; oil-in temperature, 185° F. ΔT is the difference between the temperature in question and the cooling-air temperature.

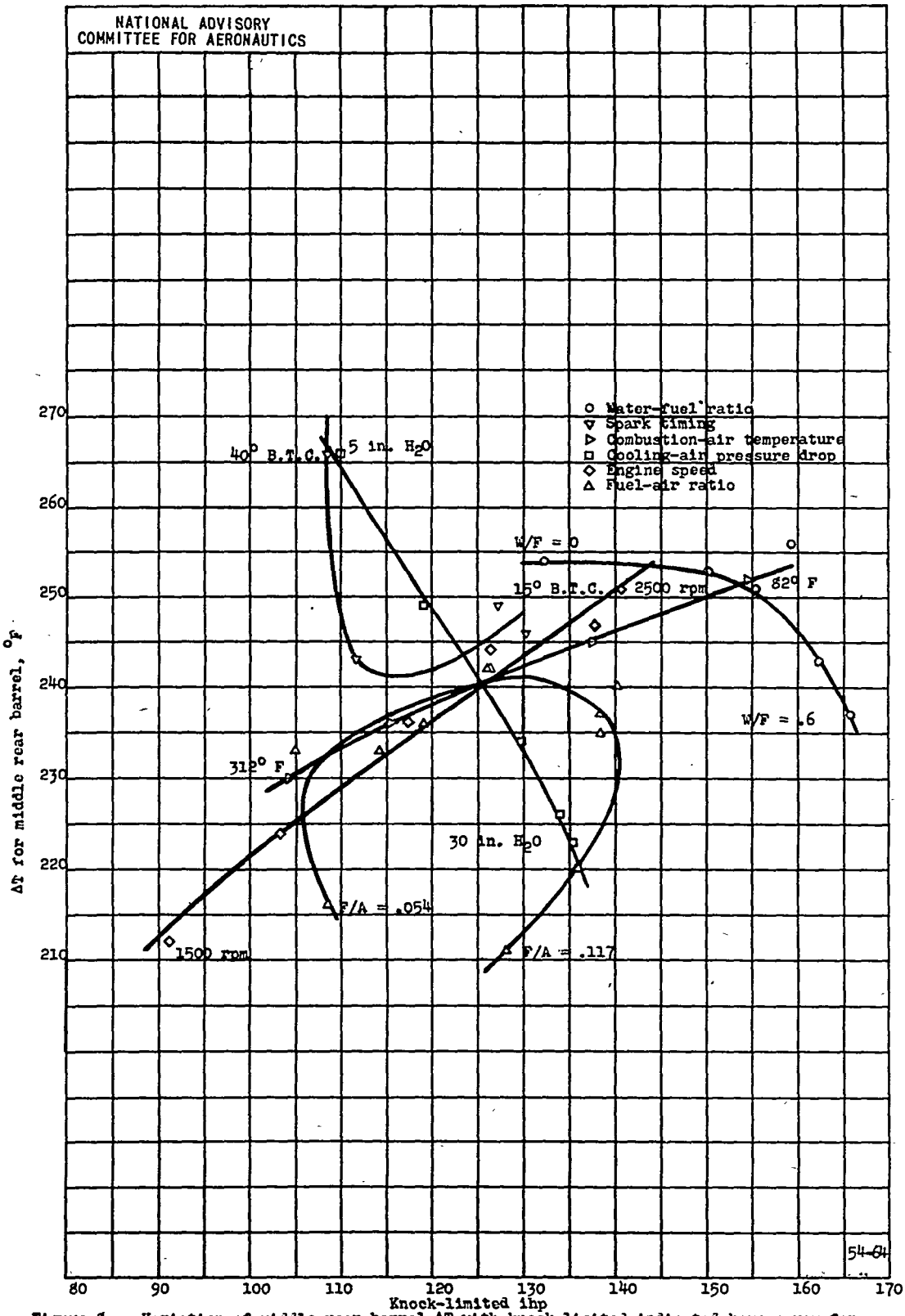

Figure 8. - Variation of middle-rear-barrel ΔT with knock-limited indicated horsepower for varying operating conditions. Wright R-2600-8 front-row cylinder; fuel, AN-F-28; compression ratio, 6.9; cooling-air temperature, 85° F; oil-in temperature, 185° F. ΔT is the difference between the temperature in question and the cooling-air temperature.

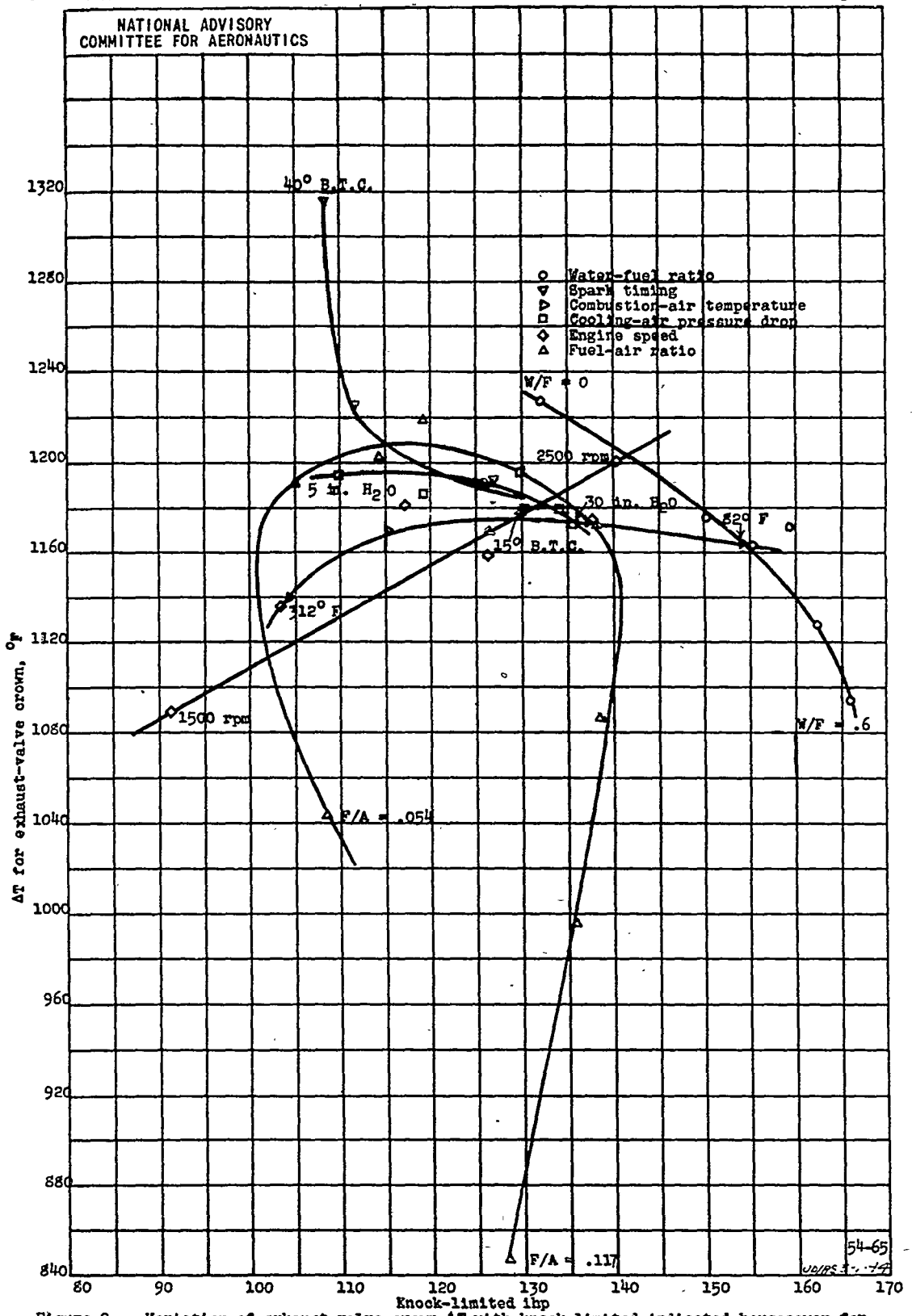

Figure 9. - Variation of exhaust-valve-crown ΔT with knock-limited indicated horsepower for varying operating conditions. Wright R-2600-8 front-row cylinder; fuel, AN-F-28; compression ratio 6.9; cooling-air temperature, 85° F; oil-in temperature, 185° F. ΔT is the difference between the temperature in question and the cooling-air temperature.

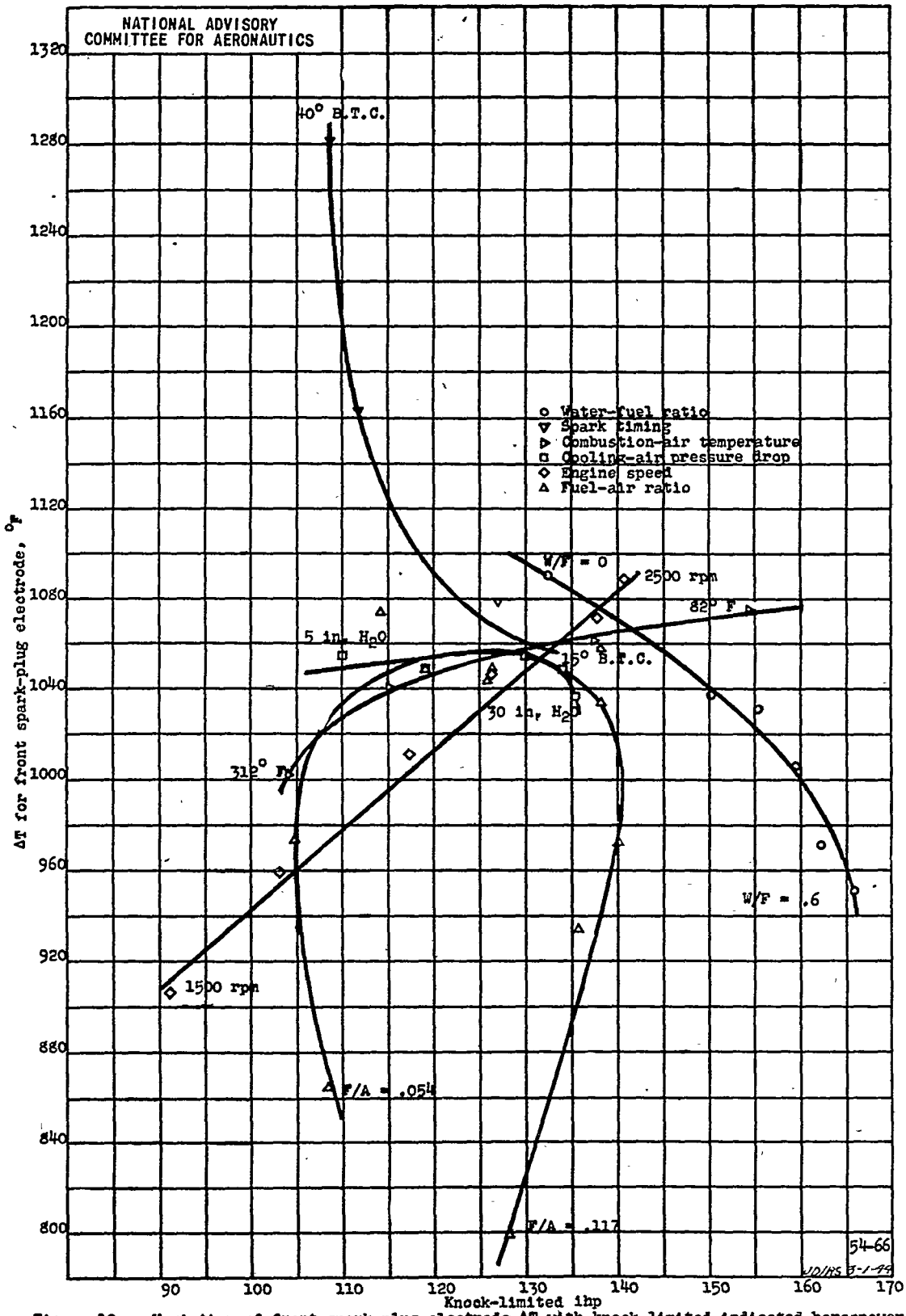

Figure 10. - Variation of front spark-plug-electrode ΔT with knock-limited indicated horsepower for varying operating conditions. Wright R-2600-8 front-row cylinder; fuel, AN-F-28; compression ratio, 6.9; cooling-air temperature, 85° F; oil-in temperature, 185° F. ΔT is the difference between the temperature in question and the cooling-air temperature.

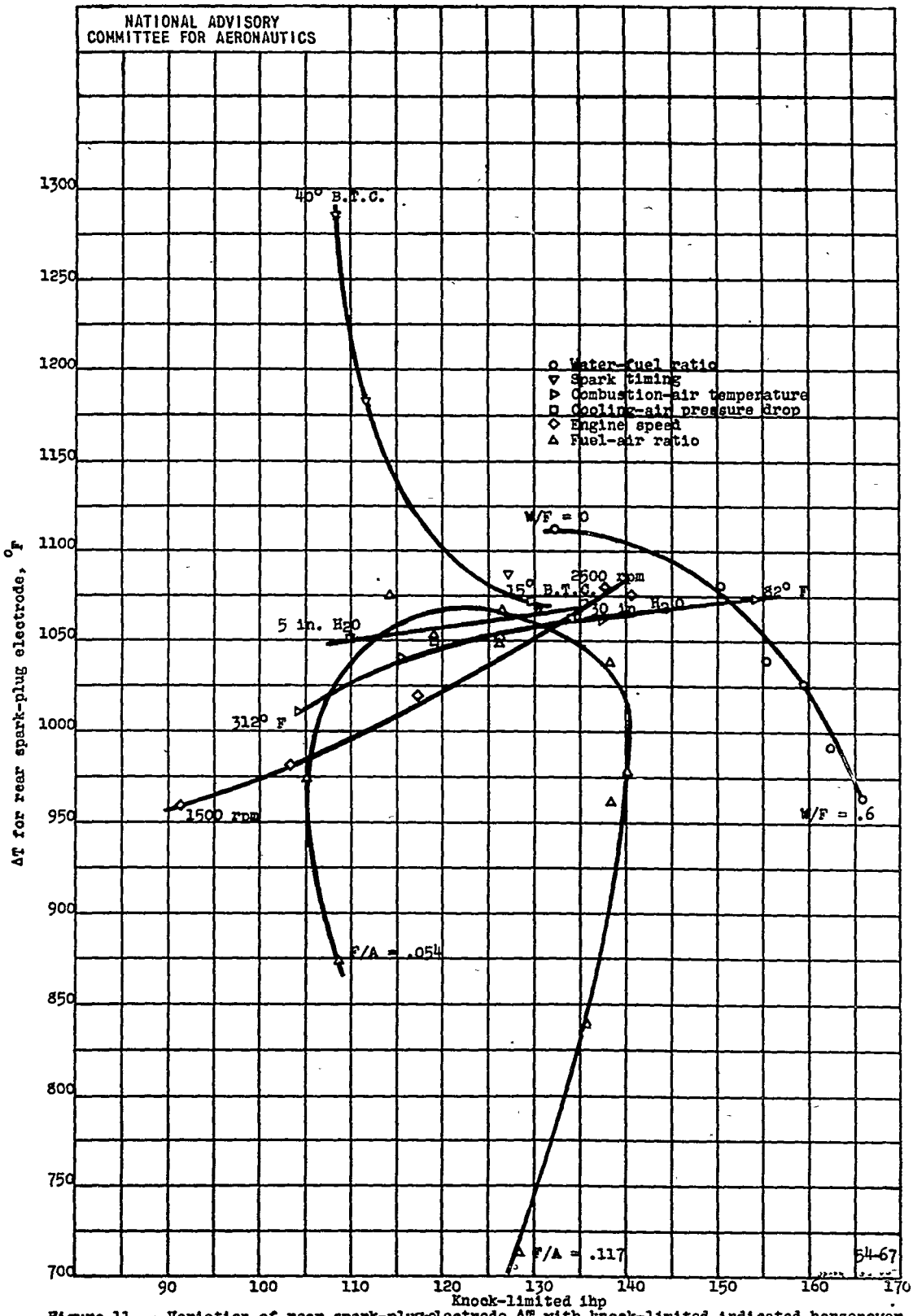

Figure 11. - Variation of rear spark-plug-electrode ΔT with knock-limited indicated horsepower for varying operating conditions. Wright R-2600-8 front-row cylinder; fuel, AN-F-28; compression ratio, 6.9; cooling-air temperature, 85° F; oil-in temperature, 185° F. ΔT is the difference between the temperature in question and the cooling-air temperature.

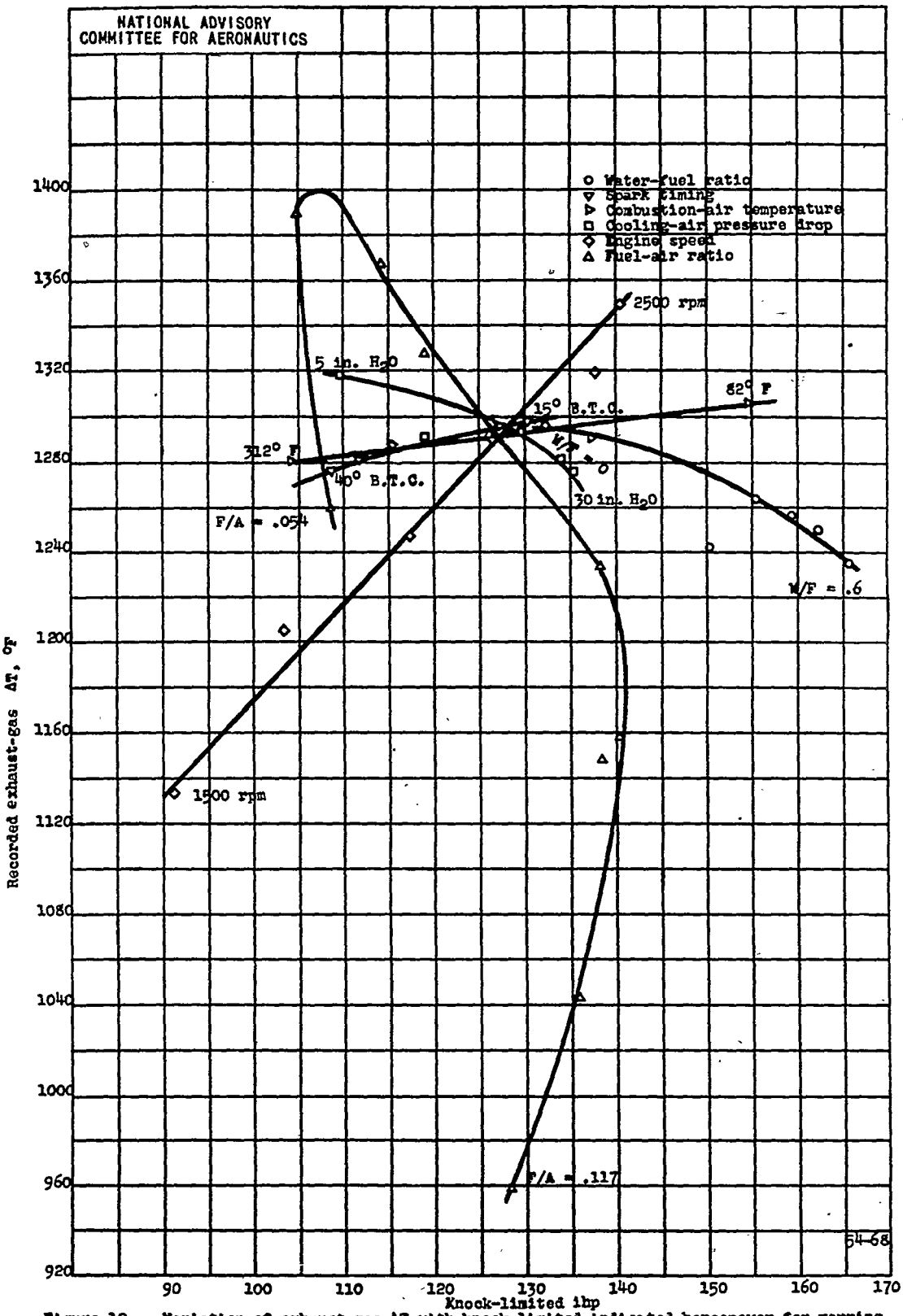

Figure 12. - Variation of exhaust-gas ΔT with knock-limited indicated horsepower for varying operating conditions. Wright R-2600-8 front-row cylinder; fuel, AN-F-28; compression ratio, 6.9; cooling-air temperature, 85° F; oil-in temperature, 185° F. ΔT is the difference between the temperature in question and the cooling-air temperature.

NASA Technical Library
3 1176 01403 3014