NATIONAL ADVISORY COMMITTEE FOR AERONAUTICS

WARTIME REPORT

ORIGINALLY ISSUED
April 1944 as
Restricted Bulletin L4D01

TESTS OF 10-INCH 24S-T ALUMINUM-ALLOY SHEAR PANELS WITH $1\frac{1}{2}$-INCH HOLES

II - PANELS HAVING HOLES WITH NOTCHED EDGES

By Paul Kuhn and L. Ross Levin

Langley Memorial Aeronautical Laboratory
Langley Field, Va.

NACA

WASHINGTON

NACA WARTIME REPORTS are reprints of papers originally issued to provide rapid distribution of advance research results to an authorized group requiring them for the war effort. They were previously held under a security status but are now unclassified. Some of these reports were not technically edited. All have been reproduced without change in order to expedite general distribution.

3 1176 01363 9654

NATIONAL ADVISORY COMMITTEE FOR AERONAUTICS

RESTRICTED BULLETIN No. L4D01

TESTS OF 10-INCH 24S-T ALUMINUM-ALLOY SHEAR PANELS WITH $1\frac{1}{2}$-INCH HOLES

II - PANELS HAVING HOLES WITH NOTCHED EDGES

By Paul Kuhn and L. Ross Levin

SUMMARY

In a previous investigation of shear panels of 24S-T aluminum alloy, it had been found that yielding of the material almost eliminates the stress concentration around small holes before failure takes place and that reinforcing rings consequently effect no significant improvement in the static strength of the panel. The present tests established the fact that the stress concentration around such holes is increased very materially by the presence of a notch on certain parts of the circumference of the hole and that reinforcing rings effectively reduce this additional stress concentration.

INTRODUCTION

A considerable amount of theoretical work has been done on the analysis of the stresses around holes with or without reinforcement of the edges. These theoretical analyses often indicate high concentrations of stresses. Tests of square shear panels of 24S-T aluminum alloy with $1\frac{1}{2}$-inch holes showed, however, that yielding of the material almost eliminates the stress concentrations in this particular material before failure occurs, and reinforcements consequently have a negligible influence on the ultimate strength (reference 1).

The present paper describes tests made of specimens similar to those of reference 1 in order to discover whether a notch at the circumference of the hole decreases the strength of the panel and, if so, whether reinforcements are effective in overcoming the deleterious effect of the notch. Such a notch may be considered

as a laboratory facsimile of a bad crack or of accidental damage that might exist in an airplane structure.

SYMBOLS

D	diameter of hole, inches
P	ultimate load acting on shear frame, kips
a	length of side of shear panel, inches
t	thickness of sheet, inches
σ	average diagonal-tension stress in net section at failure, ksi
τ	average shear stress in net section at failure, ksi

TESTS AND TEST RESULTS

Material.- The material used was 24S-T aluminum alloy nominally 0.051 inch thick. It was cut from the sheet from which the 0.051-inch-thick specimens for the investigation of reference 1 had been cut; the test results may therefore be compared directly with those of reference 1. The stress-strain curve of the material may be found in reference 1.

Test specimens.- The test specimens were sheets 12 inches square with a $1\frac{1}{2}$-inch hole in the center. The edges of the holes were plain or reinforced. The reinforcement was provided either by forming a 45° flange on the edge of the sheet or by riveting rings to the sheet as shown in figure 1.

On one control specimen, the edge of the sheet at the hole was left smooth (specimen 1, table 1). The ultimate stress obtained from this control specimen was averaged with that from a similar specimen of reference 1 (specimen 2, table 1). On all other specimens except specimen 12, the edge of the hole was notched with a triangular jeweler's file. On specimen 12, scratches

were made across the edge of the hole with a double-cut file having 36 teeth per inch. For the main series of tests, the notches were located at the two ends of the diameter coinciding with the compression diagonal of the test jig. For an auxiliary series of tests, the location of the notches was varied. The depth of the notch was measured with an optical micrometer and the shape of the notch was determined from a photomicrograph. The shape and dimensions of the notch are shown in figure 2.

Test procedure.- The specimens were bolted into a shear jig of the picture-frame type (fig. 1) and were loaded in a hydraulic testing machine at a rate of 4 kips per minute until failure occurred. As far as could be observed, failure always took place immediately after the sheet began to tear.

Evaluation of test data.- The ultimate shear stress on the net section of a specimen was calculated by the formula

$$\tau = \frac{0.707P}{t(a - D)} \tag{1}$$

with $a = 10$ inches and $D = 1.50$ inches. At failure, the sheet was practically in pure diagonal tension; the shear stresses calculated by formula (1) were therefore converted into the corresponding diagonal-tension stresses by the fundamental formula for diagonal tension in a frame with rigid edge members

$$\sigma = 2\tau \tag{2}$$

The last column of table 1 gives the ratio σ_o/σ, where σ_o is the stress σ developed by the control specimens with smooth-edged holes. If the ultimate strength of the material were used instead of σ_o, the ratio would be the stress-concentration factor at rupture as usually defined. The ratio σ_o/σ may be termed a comparative factor of stress concentration because it compares the strength of a notched specimen with that of a smooth-edged specimen. The difference between this comparative factor and the usual factor of stress concentration is small, because σ_o differs from the ultimate strength of the material by less than 5 percent.

Test results and discussion.- Inspection of table 1 shows that specimen 3 with the notch located at 0° produced a comparative stress-concentration factor of about 1.6 and that the effectiveness of the reinforcements in reducing this stress concentration was related to the stiffness of the rings (specimens 4 to 6). Even the heavy double steel rings on specimen 4, however, did not altogether eliminate the effect of the notches. No attempt was made to establish a quantitative relation between the reduction in stress and the stiffness of the rings because the shape of the notch was a purely arbitrary standard, chosen because it produced severe effects that could be readily measured. Remarkable is the fact that the flanged edge used on specimen 7 was as effective as the ring used on specimen 6.

For purposes of comparison, some tests were made of tensile specimens of standard dimensions with single notches or two opposing notches filed across the edges. The stress-concentration factors for these specimens were found to be about 1.2, which is much lower than the factor of 1.6 found for the panel specimens on which the same type of notch was located at the edge of a hole.

As a matter of some general interest, figure 3 shows the results of the auxiliary series of tests (specimens 3 and 8 to 11), in which the location of the notch was varied.

The specimen with file scratches, although listed last, was actually a preliminary specimen tested in an attempt to find a suitable type of artificial damage. The effect of these small scratches is evidently much less than that of the notch.

CONCLUDING REMARKS

Previous tests had shown that the yielding of 24S-T aluminum alloy is sufficient to reduce the stress-concentration factor for small holes to values only slightly greater than unity and that reinforcing rings consequently effect no significant improvement in the static strength developed by shear panels with small holes. It appears impossible, therefore, to base design criterions for the strength and stiffness of reinforcing rings on static strength. The present tests established

the fact that the stress concentration around such holes is very materially increased by the presence of a notch and that this stress concentration caused by notches can be reduced effectively by reinforcing rings. Notches or cracks would not exist in actual structure, however, except as the result of accidental damage or vibration. It appears, therefore, that design criterions for reinforcing rings will need to be based on service experience.

Langley Memorial Aeronautical Laboratory,
National Advisory Committee for Aeronautics,
Langley Field, Va.

REFERENCE

1. Kuhn, Paul, and Levin, L. Ross: Tests of 10-Inch 24S-T Aluminum-Alloy Shear Panels with $1\frac{1}{2}$-Inch Holes. NACA RB No. 3F29, 1943.

TABLE 1.- TESTS OF 10-INCH SHEAR PANELS WITH $1\frac{1}{2}$-INCH HOLES HAVING NOTCHES AT CIRCUMFERENCE

[Locations measured from compression diagonal of shear frame]

Specimen	Location of notches (deg) (a)	Number of notches	Type of reinforcement	Location of failure (deg) (a)	P (kips)	σ (ksi)	$\frac{\sigma_o}{\sigma}$ (b)
1	--------	0	----------	0	20.25	65.7	1.01
[c]2	--------	0	----------	0	------	67.0	.99
3	0	2	----------	0	12.38	40.4	1.64
4	0	2	Double ring, 0.125 inch steel	[d]0 and 45	18.00	59.3	1.12
5	0	2	Single ring, 0.064 inch 24S-T	[d]0 and 45	16.00	52.8	1.26
6	0	2	Single ring, 0.051 inch 24S-T	0	14.50	48.2	1.38
7	0	2	45° flange	0	14.92	48.2	1.38
8	15	4	----------	15	12.88	42.0	1.58
9	30	4	----------	30	15.32	50.0	1.33
10	45	4	----------	0	19.17	62.0	1.07
11	60	4	----------	0	20.36	67.0	.99
12	File scratches around circumference		----------	10	19.38	63.0	1.05

[a]See figure 1.

[b] σ_o is average value of σ for specimens 1 and 2.

[c]Data from reference 1.

[d]Failure at 45° was through rivet hole.

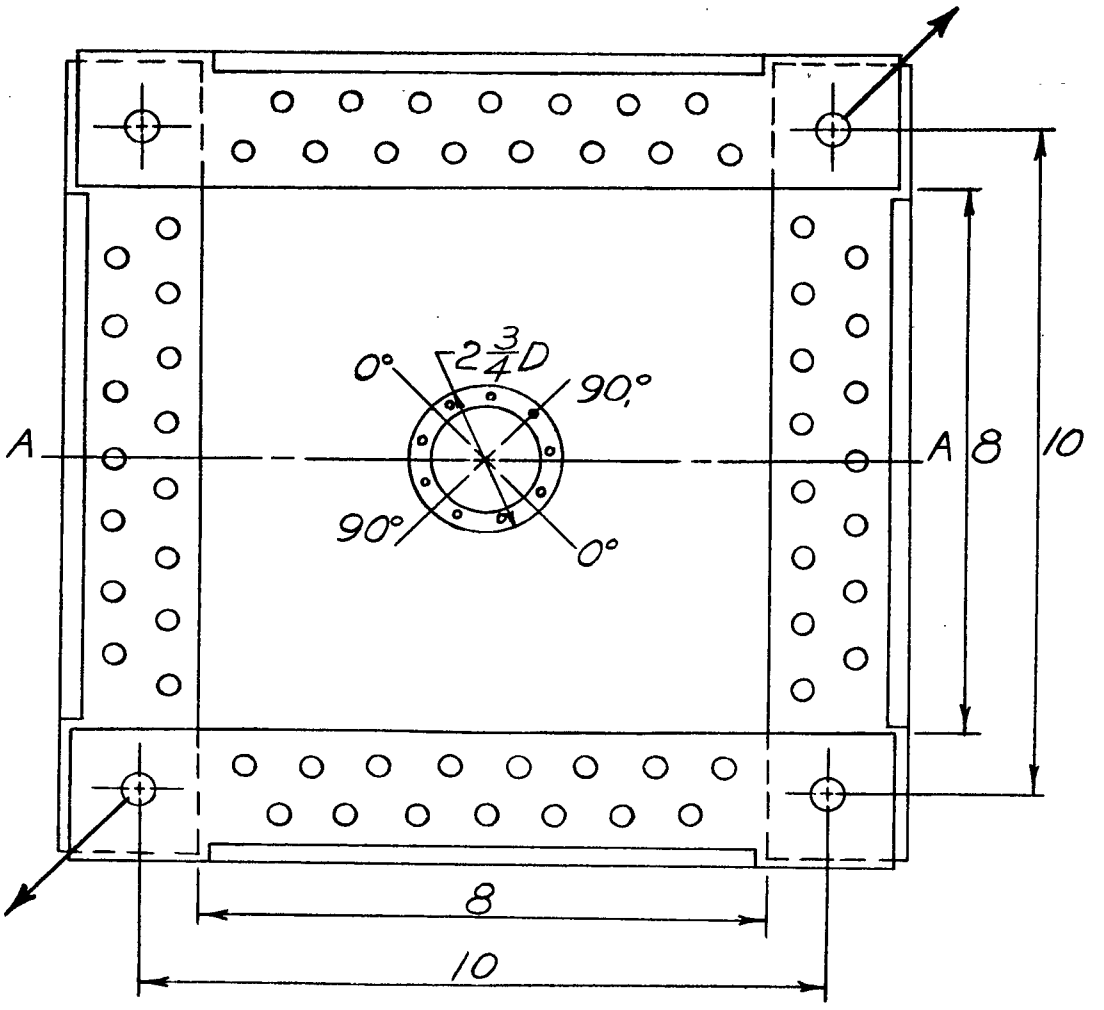

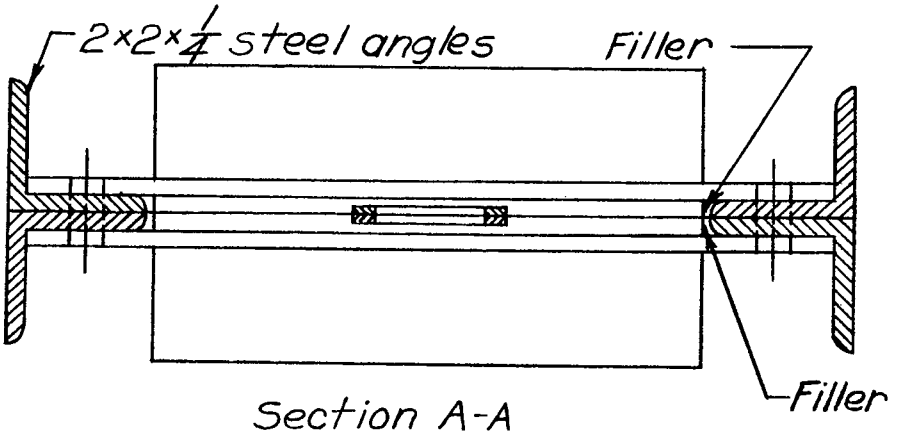

Figure 1.- Shear frame and specimen with reinforcing ring.

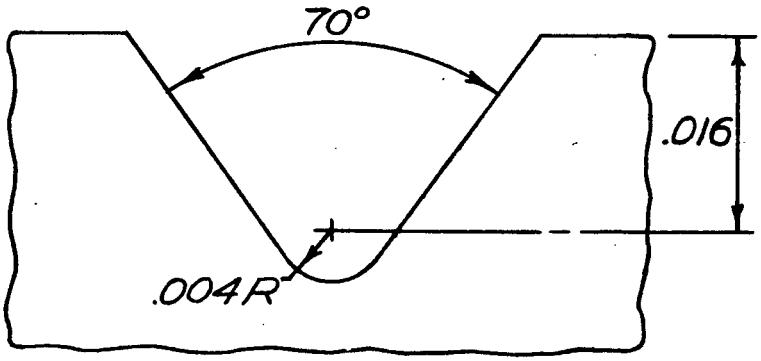

Figure 2.- File notch on edge of hole.

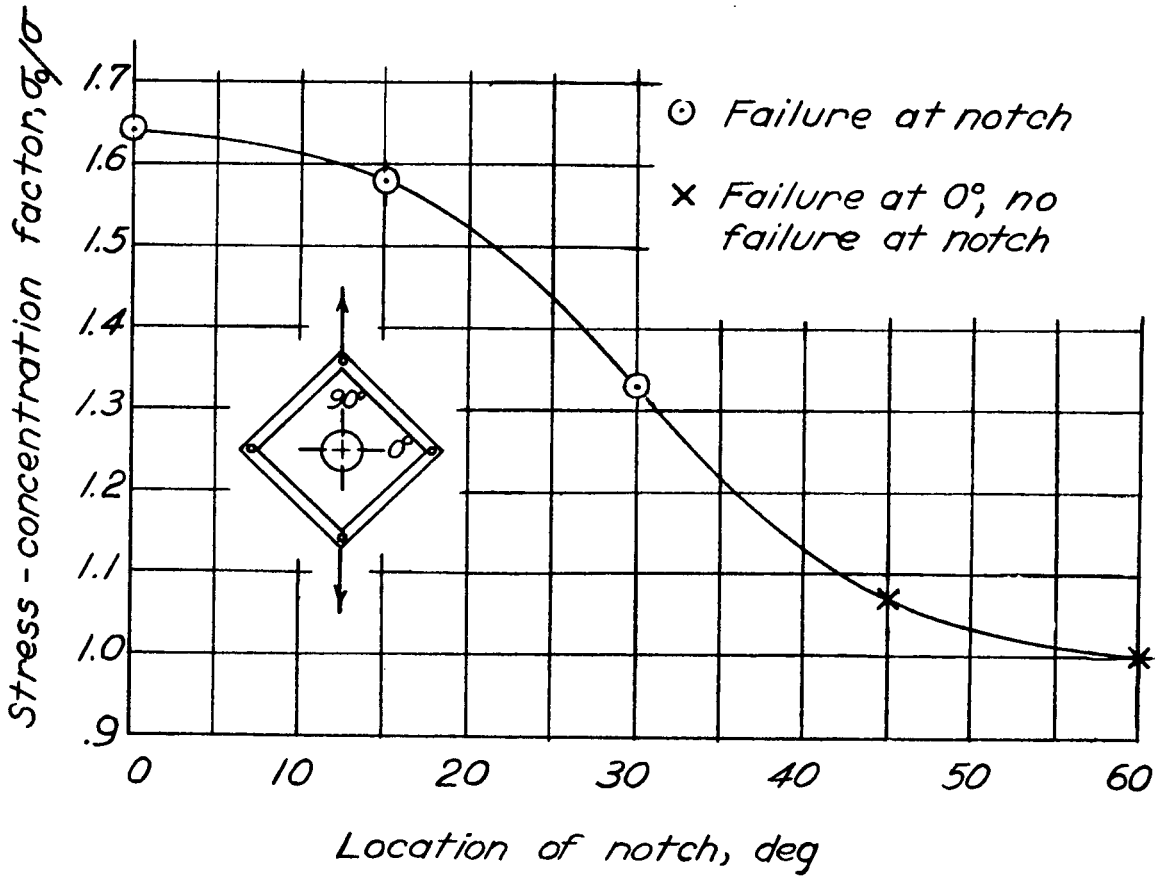

Figure 3.- Effect of notch location on stress concentration.

LANGLEY RESEARCH CENTER
3 1176 01363 9654