REPORT No. 809

PRINCIPLES OF MOMENT DISTRIBUTION APPLIED TO STABILITY OF STRUCTURES COMPOSED OF BARS OR PLATES

By Eugene E. Lundquist, Elbridge Z. Stowell, and Evan H. Schuette

SUMMARY

The principles of the Cross method of moment distribution, which have previously been applied to the stability of structures composed of bars under axial load, are applied to the stability of structures composed of long plates under longitudinal load. A brief theoretical treatment of the subject, as applied to structures composed of either bars or plates, is included, together with an illustrative example for each of these two types of structure. An appendix presents the derivation of the formulas for the various stiffnesses and carry-over factors used in solving problems in the stability of structures composed of long plates.

INTRODUCTION

The usual procedures for calculating critical buckling loads for the members of complex structures are often somewhat involved and are not easily reduced to a set of routine calculations. Many practical engineers, as a consequence, do not attempt to calculate critical buckling loads.

One approach to the solution of problems in the stability of structural members that is purely engineering in character and that lends itself to simplified calculations is provided by use of the principles of the Cross method of moment distribution (reference 1). The theory of moment distribution, originally devised as a rapid method of stress analysis, describes how the resistance to an external moment, applied at any joint in a structure composed of bars, is distributed throughout the structure in accordance with the resistance of the various joints to rotation. The original theory of Cross was modified by James (reference 2) to take into account the possibility of axial load in the members.

The modified theory of James has already been applied in reference 3 to the study of the stability of structures composed of bars under axial load. Because of the fundamental character of the quantities used in the method of moment distribution and of the formulas associated with them, it is possible by suitable definition of the quantities to apply an analysis exactly like that of reference 3 to the study of the stability of structures composed of plates under longitudinal load.

The present report gives a generalized derivation of the formulas, applicable to both bar and plate structures. The evaluation of various quantities for structures composed of bars was given in reference 3. The corresponding evaluation of the quantities for structures composed of plates is given in an appendix to this report.

SYMBOLS

GENERAL

E modulus of elasticity
W load on structure
θ rotation of joint
y deflection
r series stability factor
U modified stiffness stability factor

BARS

$\overline{E}$ effective modulus of elasticity for stresses beyond the elastic range
I moment of inertia of cross section about an axis perpendicular to plane of bending
A area of cross section
ρ radius of gyration $\left(\sqrt{\frac{I}{A}}\right)$
L length of bar
P axial load in bar (absolute value)
c fixity coefficient in column formula $\left(\frac{P}{A}=\frac{c\pi^2\overline{E}}{\left(\frac{L}{\rho}\right)^2}\right)$
j stiffness factor $\left(\sqrt{\frac{\overline{E}I}{P}}\right)$

$$\left(\frac{L}{j}\right)_{eff}=\frac{L}{\sqrt{\frac{\overline{E}I}{P}}}$$

PLATES

$\overline{E}$ effective plate modulus for stresses beyond the elastic range
μ Poisson's ratio
λ half wave length of buckles in longitudinal direction
b width of plate
t thickness of plate
D flexural stiffness of plate per unit length $\left(\frac{Et^3}{12(1-\mu^2)}\right)$
$\overline{D}$ effective flexural stiffness of plate for stresses beyond the elastic range $\left(\frac{\overline{E}t^3}{12(1-\mu^2)}\right)$

σ longitudinal compressive stress in plate

$k=\frac{b^2t}{\pi^2\overline{D}}\sigma$ (always positive)

M bending moment

M_0 amplitude of sinusoidally distributed moment

ϵ restraint coefficient

w deflection normal to plane of plate

SUBSCRIPTS

i initial value

cr critical

eff effective

F flange

W web

DEFINITIONS

Member.—The word "member" is used in this report to indicate either a bar or an infinitely long, flat, rectangular plate.

Joint.—A joint in a structure composed of plates, by analogy to a joint in a structure of bars, is defined as the entire length of the intersection line between two or more joined plates.

Stiffness and carry-over factor.—If a bar is on unyielding supports at each end, the moment at one end necessary to produce a rotation of one-fourth radian at that end is called the stiffness of the bar and the ratio of the moment developed at the far end to the moment applied at the near end is called the carry-over factor of the bar.

In order to write similar definitions of stiffness and carry-over factor for plates, it is necessary to include a statement showing how the moment is distributed along the edges of the plate. The solution of the differential equation for the critical compressive stress of an infinitely long plate with given edge restraints reveals that, when the plate buckles, the moments and the rotations at both edges of the plate vary sinusoidally along the edges and are in phase with each other. The ratio of moment per unit length at any point along the edge to the rotation at that point is therefore constant along the edge for a given wave length. The following definitions of stiffness and carry-over factor for plates may therefore be written:

> Stiffness—If an infinitely long flat plate is under longitudinal compression with one unloaded edge on an unyielding support, the ratio of moment per unit length at any point along this unloaded edge to the rotation in quarter-radians at that point when the moment is distributed sinusoidally is called the stiffness of the plate.
>
> Carry-over factor—The ratio of the moment per unit length developed at any point along the far unloaded edge to the applied moment per unit length at the corresponding position along the near unloaded edge is called the carry-over factor of the plate.

The foregoing definitions make it possible to use various stiffnesses and carry-over factors in a similar manner for both bars and plates.

The symbols used to designate the stiffness and carry-over factor for the different types of support and restraint at the far end or edge are given in the following table:

Stiffness	Carry-over factor	Conditions at far end or edge
S	C	Far end or edge supported and fixed against rotation.
S^{I}	C^{I}	Far end or edge supported and elastically restrained against rotation.
S^{II}	$C^{II}=0$	Far end or edge supported with no restraint against rotation.
S^{III}	$C^{III}=0$	Far edge free (no support and no restraint against rotation). This condition is not used in connection with bars.
S^{IV}	$C^{IV}=-1$	Far end or edge supported and subjected to moment equal and opposite to that applied at near end or edge.

The quantities S^{I}, C^{I}, S^{II}, C^{II} of this paper correspond to S', C', S'', C'', respectively, of reference 3.

The stiffness of a bar computed according to the definition used herein is one-fourth that computed according to the definition used by Cross (reference 1). In moment distribution the relative, not the absolute, values of stiffnesses of the members are of importance. The foregoing definition was selected so that the stiffness of a bar of constant cross section with no axial load and fixed at the far end would be $\overline{E}I/L$ instead of $4\overline{E}I/L$.

Sign convention.—A clockwise moment acting on the end of a bar or at any station along the side edge of a plate is positive and causes positive rotation at that end or station. An external moment applied at a joint is considered to act on the joint; a counterclockwise moment acting on a joint is positive.

CRITERION FOR STABILITY

It is assumed that all members in a structure composed of bars lie in the plane in which buckling occurs and that the joints of the structure are held rigidly in space but are free to rotate subject to the elastic restraint of the connecting members. Similarly, in a structure composed of plates, it is assumed that the joints between plates, or between plates and longitudinal restraining members, remain in their original straight lines but are free to rotate subject to the elastic restraint of the connecting members.

In the discussion that follows, either of two criterions for stability may be used. For each criterion, the stiffness and carry-over factor are functions of the axial load in the bar or the longitudinal load in the plate. (See references 2, 3, 4, and 5.)

Stiffness criterion for stability.—From a structure of many members the section comprising one joint shown in figure 1 is considered. Figure 1 may be interpreted as being either a plan view of a structure composed of bars or an end view of a structure composed of long plates. An external moment of -1 is assumed to be applied at the joint i. If the structure is composed of plates, this moment is the external moment per unit length at the station under consideration. Because the angles between members at the joint are preserved and the rotations of all members at the joint must therefore be equal, the moment of 1 added to balance this joint is distributed among the members in proportion to their stiffnesses, as follows:

$$\frac{S^{I}_{ij_1}}{\Sigma S^{I}_{ij}} \text{ to member } ij_1$$

$$\frac{S^{I}_{ij_2}}{\Sigma S^{I}_{ij}} \text{ to member } ij_2$$

and so forth. The moment-distribution analysis is now complete as far as moments at joint i are concerned.

For stability, the moment in the members must be finite. The stiffness criterion for stability is therefore

$$\Sigma S^{\mathrm{I}}_{ij}>0 \tag{1}$$

The condition of neutral stability gives the critical buckling load for the structure and is obtained by setting the stiffness stability factor equal to zero, or

$$\Sigma S^{\mathrm{I}}_{ij}=0 \tag{2}$$

In the general case there is more than one critical buckling load; thus, satisfaction of equation (2) is insufficient for the solution of a given stability problem. Instead, the lowest load that satisfies equation (2) must be calculated and compared with the load for which the structure is designed. Only if this lowest critical load is greater than the design load is the structure stable.

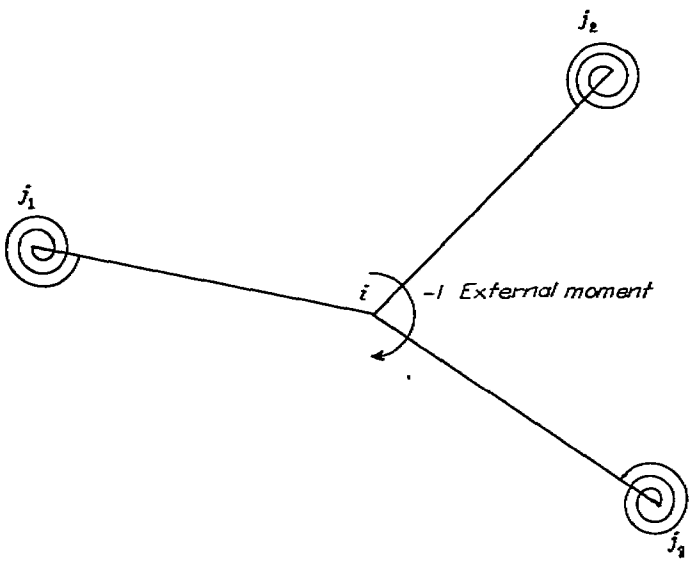

FIGURE 1.—Section comprising one joint.

According to the definition of stiffness, the moment distributed to any member must be the rotation of the joint multiplied by the stiffness of the member. Hence θ, the rotation expressed in quarter-radians of joint i caused by the external moment -1, is

$$\theta=\frac{1}{\Sigma S^{\mathrm{I}}_{ij}} \tag{3}$$

Equation (3) will be used under the section "Method of Making Preliminary Estimate of the Critical Load."

Series criterion for stability.—In a structure of many members, the section comprising two joints shown in figure 2 is considered. An external moment of -1 is assumed to be applied at joint i. If the structure is composed of plates, this moment is the external moment per unit length at the station under consideration. By a moment-distribution analysis of reference 3, the total moment in members ih at joint i is

$$\frac{\Sigma S^{\mathrm{I}}_{ih}}{S_{ij}+\Sigma S^{\mathrm{I}}_{ih}}(1+r+r^2+r^3+\ .\ .\ .)$$

or

$$\frac{\Sigma S^{\mathrm{I}}_{ih}}{S_{ij}+\Sigma S^{\mathrm{I}}_{ih}}\frac{1}{1-r} \tag{4}$$

where

$$r=\frac{S_{ij}C_{ij}}{S_{ij}+\Sigma S^{\mathrm{I}}_{ih}}\frac{S_{ji}C_{ji}}{S_{ji}+\Sigma S^{\mathrm{I}}_{jk}} \tag{5}$$

For stability, the total moment in members ih must be finite. The series criterion for stability is therefore

$$r<1 \tag{6}$$

The condition of neutral stability gives the critical buckling load for the structure and is obtained by setting

$$r=1 \tag{7}$$

The same considerations that apply to the stiffness criterion for stability also apply to the series criterion for stability. The lowest load that satisfies the equation for neutral stability (in this case, equation (7)) must be calculated and compared with the load for which the structure is designed. If this lowest critical load is greater than the design load, the structure is stable.

According to the definition of stiffness, the total moment in members ih at joint i must be the rotation of joint i multiplied by the total stiffness of members ih. Hence θ, the rotation in quarter-radians of joint i caused by the external moment -1, is:

$$\theta=\frac{1}{S_{ij}+\Sigma S^{\mathrm{I}}_{ih}}\frac{1}{1-r} \tag{8}$$

Formulas (2) and (7) are both derived in reference 3. Whether formula (2) or formula (7) is to be used will depend upon the particular problem. In cases in which the structure is symmetrical about a joint, the expressions concerned with the stiffness criterion usually involve fewer calculations; when the structure is symmetrical about a member, the formulas concerned with the series criterion offer certain advantages.

Stiffness criterion for stability when structure is symmetrical about a member.—A modification of the stiffness criterion in which the values of S^{IV} are used is sometimes convenient when the structure is symmetrical about a member, as shown in figure 3. When this criterion is used, opposing unit moments are applied at the two ends or edges of the member about which the structure is symmetrical.

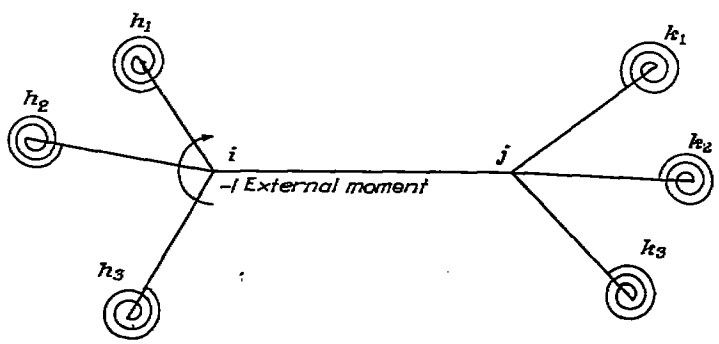

FIGURE 2.—Section comprising two joints.

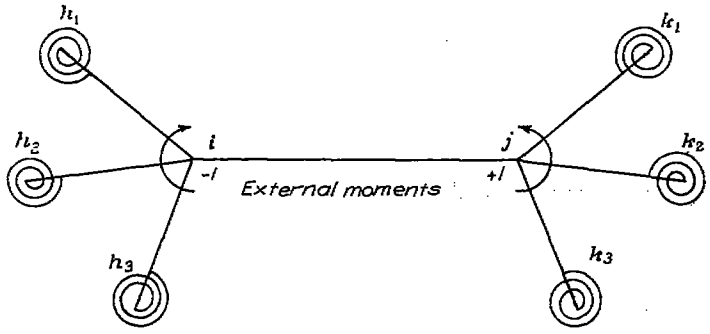

FIGURE 3.—Section of structure symmetrical about member ij.

The stiffness stability factor of equation (2) for the joint i in figure 3 is then written:

$$\Sigma S^{\mathrm{I}}{}_i = S^{\mathrm{IV}}{}_{ij} + \Sigma S^{\mathrm{I}}{}_{ih} = 0 \tag{9}$$

An illustration of the use of this special application of the stiffness criterion in a plate problem is included in the section "Examples."

CARRY-OVER FACTOR AND STIFFNESS

In order to check the stability of a group of structural members by use of the equations previously given, additional equations for the carry-over factor and stiffness are required.

The member ij shown in figure 4, on an unyielding support at i and elastically restrained at j by members jk is considered. The members jk are also elastically restrained at their far ends k. By a moment-distribution analysis (reference 3) it follows that the carry-over factor $C^{\mathrm{I}}{}_{ij}$ is

$$C^{\mathrm{I}}{}_{ij} = C_{ij} \frac{\Sigma S^{\mathrm{I}}{}_{jk}}{S^{\mathrm{II}}{}_{ji} + \Sigma S^{\mathrm{I}}{}_{jk}} \tag{10}$$

and the stiffness $S^{\mathrm{I}}{}_{ij}$ is

$$S^{\mathrm{I}}{}_{ij} = \frac{S^{\mathrm{II}}{}_{ij}}{1 - C_{ji} C^{\mathrm{I}}{}_{ij}} \tag{11}$$

Substitution of equation (10) in equation (11) gives

$$S^{\mathrm{I}}{}_{ij} = \frac{S^{\mathrm{II}}{}_{ij}}{1 - C_{ji} C_{ij} \dfrac{\Sigma S^{\mathrm{I}}{}_{jk}}{S^{\mathrm{II}}{}_{ji} + \Sigma S^{\mathrm{I}}{}_{jk}}} \tag{12}$$

For member ij, the limiting values of the carry-over factor and of stiffness given by equations (10) and (12), respectively, are obtained as follows: When the far end j is pinned, there is no elastic restraint at j and $\Sigma S^{\mathrm{I}}{}_{jk} = 0$. For this limiting condition, $C^{\mathrm{I}}{}_{ij} = C^{\mathrm{II}}{}_{ij} = 0$, and $S^{\mathrm{I}}{}_{ij} = S^{\mathrm{II}}{}_{ij}$. When the far end j is fixed, there is complete restraint at j and $\Sigma S^{\mathrm{I}}{}_{jk} = \infty$. For this limiting condition, $C^{\mathrm{I}}{}_{ij} = C_{ij}$ and $S^{\mathrm{I}}{}_{ij} = S_{ij}$ where

$$S_{ij} = \frac{S^{\mathrm{II}}{}_{ij}}{1 - C_{ji} C_{ij}} \tag{13}$$

A similar equation, which expresses $S^{\mathrm{IV}}{}_{ij}$ in terms of $S^{\mathrm{II}}{}_{ij}$ and C_{ji}, can be obtained from equation (11) as follows: If the restraint at the far end is such that $C^{\mathrm{I}}{}_{ij} = -1$, there must be, at the far end, a moment of the same magnitude but opposite in direction to that applied at the near end. If, therefore, $C^{\mathrm{I}}{}_{ij}$ in equation (11) equals -1, $S^{\mathrm{I}}{}_{ij}$ becomes $S^{\mathrm{IV}}{}_{ij}$, where

$$S^{\mathrm{IV}}{}_{ij} = \frac{S^{\mathrm{II}}{}_{ij}}{1 + C_{ji}} \tag{14}$$

The expressions used for the computation of numerical values of S, C, S^{II}, S^{III}, and S^{IV} for plates are given in the appendix.

Up to this point, all the equations in this report are general. In nearly all cases encountered in practice, however, the cross section and axial load do not vary along the length of each member. For this special case, $C_{ij} = C_{ji}$, $S_{ij} = S_{ji}$, and so forth. In practical problems the numerical values for these quantities are obtained by use of tables. Such tables are given for bars in reference 4, where the argument is $(L/j)_{eff}$, and for plates in reference 5, where the arguments are k and λ/b.

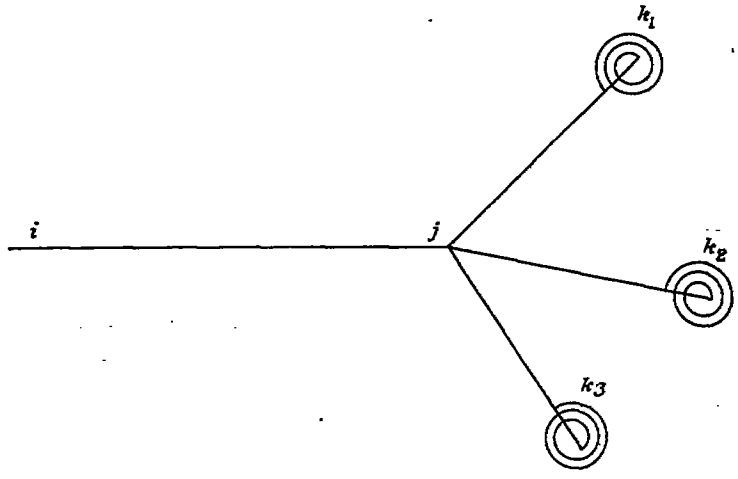

FIGURE 4.—Member restrained by other members at far end.

METHOD OF MAKING PRELIMINARY ESTIMATE OF THE CRITICAL LOAD

In order to determine the lowest critical load for the structure, it is necessary to test either equation (2) or equation (7) for neutral stability for different assumed loads. The lowest load that satisfies either equation is the critical load for the structure. If evaluation of the stiffness or the series stability factors has required lengthy computations and if all the assumed loads for which these factors have been evaluated are less than the lowest critical load, as evidenced by the fact that $\Sigma S^{\mathrm{I}}{}_{ij}$ remains positive or that r remains less than unity, a method utilizing the work already done may be used to estimate the critical load. This estimated load may then be used as a trial load in equation (2) or equation (7).

The method of estimating the lowest critical load is based upon principles used in the analysis of experimental observations in problems of elastic stability (references 6 and 7). Southwell (reference 6) mentioned that the unavoidable imperfections in practical structures prevent the realization of the concept of a critical load at which deflections begin. Instead, the initial deflections present in practical structures steadily grow with increase in load and, according to the usual theory, the deflections become infinite as the critical load is approached.

The general relation between load and deflection for problems of elastic stability (reference 7) shows that if $(y-y_1)/(P-P_1)$ is plotted as ordinate against $y-y_1$ as abscissa, the curve obtained when P approaches P_{cr} is essentially a straight line of which the inverse slope is $P_{cr}-P_1$. Here y is the deflection at load P in a member, y_1 and P_1 are initial values of y and P, respectively, P_{cr} is the lowest critical load, and

$$P_1<P<P_{cr}$$

If simultaneous readings of load and deflection recorded in a test are plotted as described with any load P as the initial reading, the value of $P_{cr}-P_1$ is readily obtained. The value of P_{cr} is then given by the relation

$$P_{cr}=(P_{cr}-P_1)+P_1 \tag{15}$$

The relation between load and deflection can also be applied to load and rotation of a joint provided that there is an initial rotation of the joints. The initial rotation is obtained by the application of the external moment -1 at some joint, after which the load on the structure is applied. As the lowest critical load is approached, the rotations become infinite.

If the distribution of the loads throughout the structure does not change as the total load W increases, the axial or longitudinal load in each member is proportional to W. If $(\theta-\theta_1)/(W-W_1)$ is plotted as ordinate against $\theta-\theta_1$ as abscissa, the curve obtained when W approaches W_{cr} is essentially a straight line with inverse slope $W_{cr}-W_1$, where θ is the rotation of a joint under the external moment -1 when load W is on the structure, θ_1 and W_1 are initial values of θ and W, respectively, W_{cr} is the lowest critical load, and

$$W_1<W<W_{cr}$$

When simultaneous values of load and rotation are plotted as described with W_1 as the initial load, the value of $W_{cr}-W_1$ is easily obtained. The value of W_{cr} is then given by the equation

$$W_{cr}=(W_{cr}-W_1)+W_1 \tag{16}$$

The procedure to be used in estimating the critical load for a group of structural members is as follows:

1. For each of the loads W assumed in the application of one of the stability criterions (equation (2) or equation (7)) to a joint, calculate the rotation θ of this joint by means of equation (3) or equation (8).
2. Designate the lowest assumed value of W and the corresponding value of θ as W_1 and θ_1, respectively.
3. Plot the curve of $(\theta-\theta_1)/(W-W_1)$ as ordinate against $\theta-\theta_1$ as abscissa and estimate W_{cr} from the slope of the resulting line. If the curve obtained is not essentially a straight line, successively higher values of the assumed loads W should be designated W_1 and the value of W_{cr} re-estimated. The accuracy of the estimated value of W_{cr} is improved as both W and W_1 approach W_{cr}.

An example of the application of this method for predicting the lowest critical load is given in reference 8.

As applied to a structure of plates, this method gives a critical load for some particular value of the half wave length λ. The value of W_{cr} that satisfies equation (2) or equation (7) and is a minimum with respect to λ must finally be found as in the example, given subsequently herein, in which the use of this method of estimating the critical load for a given wave length was not required.

DISCUSSION OF METHODS

Each of the two equations for neutral stability contains the stiffness of certain members elastically restrained at their far ends or edges by other members. These other members may also be elastically restrained at their far ends or edges by still other members, and so on. By successive application of equation (12) the restraining effect of all the members in the structure can be considered.

In practical calculations for structures composed of bars, modification of the actual structure by the introduction of pins at certain joints is usually necessary. It has sometimes been the custom to consider only one member elastically restrained at the ends by the adjacent members, which are assumed to be pinned at the far ends. The calculation of W_{cr} by use of small groups of members in this manner is quite inadequate. Treatment of much larger groups of members in one calculation is necessary if a reasonably accurate value of W_{cr} is to be obtained.

If the stresses in any of the members of a structure are beyond the elastic range, the reduction of the modulus of elasticity at these stresses must also be considered. Discussions of this reduced modulus for structures composed of bars are given in references 3 and 8. References 9 and 10 discuss the reduced modulus of elasticity for plates at high stresses.

EXAMPLES

Structure composed of bars.—The example of a structure composed of bars presented herein is identical with that given in reference 3; for the solution of the problem, the tables of reference 3, rather than the more extensive tables of reference 4, were used.

A continuous member of 1025 steel is to be designed to carry the loads shown in figure 5. For simplicity, the same cross section will be used in all spans.

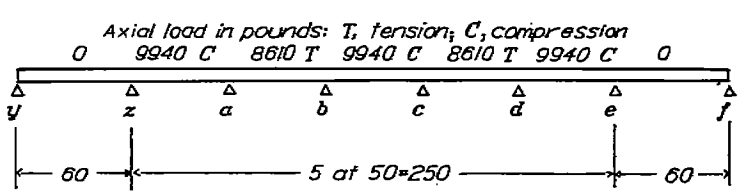

FIGURE 5.—Illustrative bar problem.

The usual column formulas for 1025-steel tubes are:

For $\frac{L}{\rho}<124$,

$$\frac{P}{A}=36{,}000-1.172\,\frac{1}{c}\left(\frac{L}{\rho}\right)^2 \tag{17}$$

For $\frac{L}{\rho}>124$,

$$\frac{P}{A}=\frac{276\times10^6}{\frac{1}{c}\left(\frac{L}{\rho}\right)^2} \tag{18}$$

It is desired that L/ρ be less than 124. Equation (17) therefore is used and, on the assumption that $c=2$, a tube of the following dimensions is selected as a trial design for compression members *za*, *bc*, and *de*.

Diameter, d	in.	1.625
Wall thickness, t	in.	0.065
Area, A	sq in.	0.3186
Moment of inertia, I	in.^{4}	0.09707

According to the problem, this tube is used as a continuous member from y to f (fig. 5).

In order to check the stability of the tube selected in the trial design, the critical buckling load will be calculated and compared with the loads given in figure 5. The axial load in the tension spans is assumed to be always 8610/9940 or 0.866 times the axial load in the compression spans. This assumption conforms to the condition that the forces in all members increase in the same ratio as the load on the structure increases.

Both the dimensions and the loading of the member shown in figure 5 are symmetrical about span *bc*. It is therefore convenient to determine the critical buckling load by use of the series criterion for stability. If the unit external moment to be applied is at joint *b*, the series stability factor is given by equation (5) with the summation signs omitted. If the symmetry about span *bc* is considered, the series stability factor becomes

$$r=\frac{(S_{bc}C_{bc})^2}{(S_{bc}+S^{\mathrm{I}}_{cd})^2} \tag{19}$$

where

$$S^{\mathrm{I}}_{cd}=\frac{S^{\mathrm{II}}_{cd}}{1-C^2_{cd}\,\dfrac{S^{\mathrm{I}}_{de}}{S^{\mathrm{II}}_{cd}+S^{\mathrm{I}}_{de}}}$$

$$S^{\mathrm{I}}_{de}=\frac{S^{\mathrm{II}}_{de}}{1-C^2_{de}\,\dfrac{S^{\mathrm{II}}_{ef}}{S^{\mathrm{II}}_{de}+S^{\mathrm{II}}_{ef}}}$$

In the equation for S^{I}_{de} it is assumed that the ends at y and f are pinned.

The detailed procedure of calculating the critical buckling load is as follows:

1. Assume a series of values for the axial load in one of the members. In order that the values of load be reasonable, a compression member should always be selected and the values of the axial load for this member computed from the column formula by use of a series of values of c. In this problem, compression member *bc* is selected and the column formula is equation (17).

2. For each assumed axial load in the selected member, calculate the corresponding axial load in every other member. In this problem the axial load in all compression members is the same and the axial load in the tension members is 0.866 times the axial load in the compression members.

3. For each load in each of the members, calculate P/A, $\overline{E}$, and $(L/j)_{eff}$. In this problem, $\overline{E}$ is obtained from equation (17) by methods outlined in reference 3, or

$$\overline{E}=\frac{1}{\pi^2}\,\frac{P}{A}\left(\frac{36000-\frac{P}{A}}{1.172}\right)$$

4. For each load in each of the members, determine the value of the terms required to evaluate equation (19), by use of the tables of reference 3 or 4.

5. The assumed load that gives $r=1$ is the critical buckling load.

The results of this procedure as applied to the problem of figure 5 are given in table I; the values of c in the first column are given for reference only and, as stated in paragraph 1 of the foregoing procedure, were so assumed that a series of reasonable values for the axial load P in the compression member *bc* could be obtained. In the last column of table I are given the values of r corresponding to the assumed values of c. As the value of c increases from 1.4 to 2.6, the value of r increases from 0.133 to 1.63. If the data of table I are plotted, it is found that when $r=1$ the lowest critical buckling loads for the trial design are

za, *bc*, and *de*	10,260 compression
ab and *cd*	8,890 tension

These critical loads are greater than the loads to which the respective members are subjected (see fig. 5). The tube selected for the trial design is therefore stable and the margin of safety for the system is

$$\frac{10260}{9940}-1=\frac{8890}{8610}-1=0.03$$

A single margin of safety is obtained for the whole system regardless of which member is used for its calculation because, when the critical load is reached, all members deflect.

More than one type of instability is possible, theoretically; therefore, as the loads P increase, there is more than one value of P for which $r=1$. (See table I.) For each type of instability there is a corresponding critical load. In design, however, the lowest critical load should be calculated and compared with the loads given in the problem.

Table I shows further that, for values of c between 1.4 and 1.5, the value of S^{I}_{de} changes from positive to negative. According to the stiffness criterion for stability, this change of sign means that members *de* and *ef*, considered alone, have changed from stable to unstable. It is also noted that S^{I}_{cd} changes from positive to negative for values of c between 2.6 and 2.7; members *cd*, *de*, and *ef*, considered alone, have therefore changed from stable to unstable, but at a much higher load. The change from stable to unstable for all members occurs for values of c between 2.5 and 2.6 when $r=1$.

Structure composed of plates.—The critical compressive stress for local instability of a 24S–T aluminum-alloy Z-section column with the cross-sectional dimensions shown in figure 6 is to be determined.

It is convenient in symmetrical plate problems of this type to use the modification of the stiffness criterion for stability previously discussed. If opposing unit external moments are applied at the joints between the web and the flanges, the stiffness stability criterion, as given by equation (9), is

$$\Sigma S^{\mathrm{I}}{}_{ij}=S^{\mathrm{III}}{}_{F}+S^{\mathrm{IV}}{}_{W}=0 \tag{20}$$

where the subscripts F and W refer to the flange and the web, respectively.

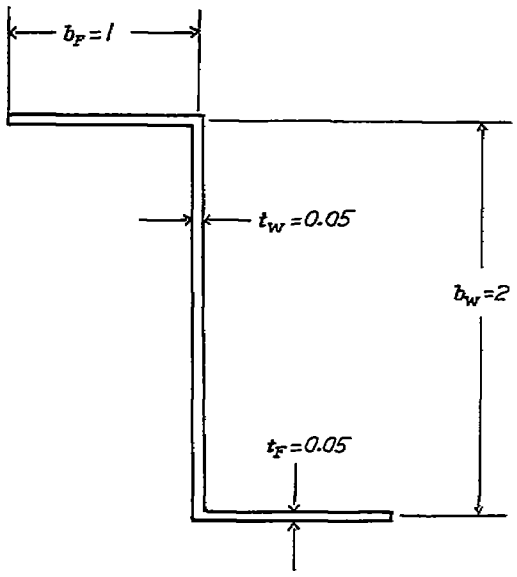

FIGURE 6.—Illustrative plate problem.

The tables of reference 5 give the values of S^{III} and S^{IV} in the dimensionless form $S^{\mathrm{III}}/(\overline{D}/b)$ and $S^{\mathrm{IV}}/(\overline{D}/b)$ rather than directly. It is therefore desirable to write equation (20) in the form

$$\Sigma S^{\mathrm{I}}{}_{ij}=\frac{S^{\mathrm{III}}{}_{F}}{\left(\frac{\overline{D}}{b}\right)_F}\left(\frac{\overline{D}}{b}\right)_F+\frac{S^{\mathrm{IV}}{}_{W}}{\left(\frac{\overline{D}}{b}\right)_W}\left(\frac{\overline{D}}{b}\right)_W=0$$

If this equation is divided by $\left(\frac{\overline{D}}{b}\right)_F$ it becomes

$$\frac{\Sigma S^{\mathrm{I}}{}_{ij}}{\left(\frac{\overline{D}}{b}\right)_F}=U=\frac{S^{\mathrm{III}}{}_{F}}{\left(\frac{\overline{D}}{b}\right)_F}+\frac{S^{\mathrm{IV}}{}_{W}}{\left(\frac{\overline{D}}{b}\right)_W}\left(\frac{\overline{D}_W}{\overline{D}_F}\right)\left(\frac{b_F}{b_W}\right)=0$$

Because $\overline{D}_W/\overline{D}_F=(t_W/t_F)^3$, the stability criterion may be written in terms of the modified stiffness stability factor U, as

$$U=\frac{S^{\mathrm{III}}{}_{F}}{\left(\frac{\overline{D}}{b}\right)_F}+\frac{S^{\mathrm{IV}}{}_{W}}{\left(\frac{\overline{D}}{b}\right)_W}\left(\frac{t_W}{t_F}\right)^3\left(\frac{b_F}{b_W}\right)=0 \tag{21}$$

The detailed procedure of calculating the critical compressive stress is as follows:

1. Compute the ratios t_W/t_F, b_F/b_W, and b_W/t_W.
2. Assume a value of λ/b_F.
3. Compute λ/b_W from the equation

$$\frac{\lambda}{b_W}=\frac{\lambda}{b_F}\times\frac{b_F}{b_W}$$

4. Assume a series of values of k_F and, for each value of k_F, compute k_W from the equation

$$k_W=\frac{k_F}{\left(\frac{t_W}{t_F}\times\frac{b_F}{b_W}\right)^2}$$

The indicated procedure is adopted as being somewhat more convenient than assumption of the stress and computation of the corresponding values of k_F and k_W. It is permissible to compute k_W from the given equation even though the stress is beyond the elastic range, because the stress and thus, by assumption, the effective plate modulus are the same in the web and the flange.

5. Evaluate the modified stiffness stability factor U from equation (21) and the tables of reference 5.
6. Plot U against k_F or k_W and note the value of k for which U is equal to zero.
7. Repeat steps 2 to 6, assuming different values of λ/b_F.
8. Plot values of k_F for $U=0$ against λ/b_F (or k_W for $U=0$ against λ/b_W) to determine the minimum value of k_F (or k_W).
9. With this minimum value of k, evaluate the critical stress from the formula (see definition of k),

$$\sigma_{cr}=\frac{k\pi^2\overline{D}}{b^2t}$$

which may be written, for the web,

$$\sigma_{cr}=\frac{k_W\pi^2\overline{E}t_W{}^2}{12(1-\mu^2)b_W{}^2} \tag{22}$$

or, for the flange,

$$\sigma_{cr}=\frac{k_F\pi^2\overline{E}t_F{}^2}{12(1-\mu^2)b_F{}^2} \tag{23}$$

The value of σ_{cr} will be the same regardless of whether equation (22) or (23) is used.

The results of this procedure as applied to the problem of figure 6 are given in table II. The values of k_W for $U=0$ in the last column of table II were determined according to step 6. If these values of k_W are plotted against λ/b_W (step 8), the minimum value of k_W is found to be about 2.9. (See fig. 7.) The critical compressive stress for local buckling of the section shown in figure 6 is then, from equation (22),

$$\sigma_{cr}=\frac{2.9\times9.87\times10.6\times10^7}{12\times0.91\times(40)^2}=17{,}400 \text{ pounds per square inch}$$

This method provides a relatively simple means of predicting the critical-stress values for columns of Z-section and

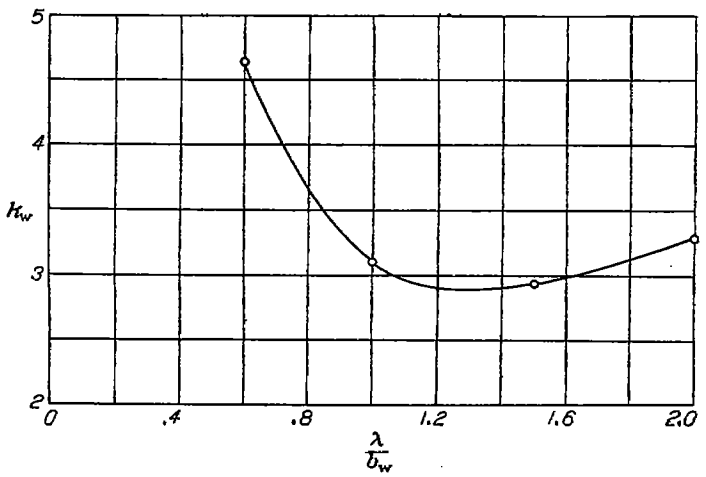

FIGURE 7.—Plot of k_W against λ/b_W for plate problem.

other simple cross sections, such as I-, channel, and rectangular-tube sections. Charts giving the values of k determined by this method which were prepared for wide ranges of the dimension ratios are presented in reference 11 for columns of I-, Z-, channel, and rectangular-tube section.

An alternate method of solution for problems of this type makes use of the charts of references 9 and 10 and the tables of reference 5. An assumption is made as to whether the flange or the web will be primarily responsible for instability. If the flange is expected to be primarily responsible, the value of S^{IV}_W for the web is determined from the tables of reference 5. This value is then used in computing the restraint coefficient ϵ (reference 9 or 10), and the value of k is found from figure 3 of reference 9. Because it is necessary to assume a value of k and λ/b in order to determine S^{IV}_W, the method will obviously involve a trial-and-error procedure. Furthermore, if repeated calculations show that S^{IV}_W is negative, the assumption that the flange would be primarily responsible for instability is incorrect. In this case, it will be necessary to evaluate S^{III}_F and to determine k from figure 3 of reference 10. A detailed example of the application of this method is given in reference 11.

LANGLEY MEMORIAL AERONAUTICAL LABORATORY,
NATIONAL ADVISORY COMMITTEE FOR AERONAUTICS,
LANGLEY FIELD, VA., *July 15, 1943.*

APPENDIX

DERIVATION OF STIFFNESSES AND CARRY-OVER FACTORS

PLATE UNDER COMPRESSION

In order to apply the method of moment distribution in any form, the values of stiffnesses and carry-over factors are required for the members in question. Formulas for the evaluation of these quantities for bars were developed in reference 3. This appendix gives the corresponding derivation of the formulas for plates; the sign convention used, as distinguished from that given in the section on "Definitions," corresponds to that of reference 12, in which deflections w are positive downward and a moment is positive if it produces compression in the upper fibers.

General deflection surface of a plate buckled under compression.—Before the values of stiffness and carry-over factor for flat plates under various conditions of edge restraint may be computed, the deflection surface of a flat plate buckled under a compressive load with a moment applied along one unloaded edge must be described.

An infinitely long flat plate under longitudinal compression is shown in figure 8 with coordinate axes. For equilibrium of an infinitesimal element of the plate, the following equation must be satisfied (reference 12, p. 324):

$$\frac{\partial^4 w}{\partial x^4}+2\frac{\partial^4 w}{\partial x^2 \partial y^2}+\frac{\partial^4 w}{\partial y^4}+\frac{\pi^2 k}{b^2}\frac{\partial^2 w}{\partial x^2}=0 \qquad \text{(A1)}$$

On the assumption that the plate is infinitely long in the direction of x, the conditions at the ends do not matter; the solution of equation (A1) is therefore taken in the form

$$w=f(y)\cos\frac{\pi x}{\lambda} \qquad \text{(A2)}$$

The unknown function $f(y)$ may be determined by substituting the expression for w into equation (A1). It is found that the function f must satisfy the equation

$$\frac{d^4 f}{dy^4}-\frac{2\pi^2}{\lambda^2}\frac{d^2 f}{dy^2}+\left(\frac{\pi^4}{\lambda^4}-\frac{\pi^4 k}{\lambda^2 b^2}\right)f=0 \qquad \text{(A3)}$$

Equation (A3) is an ordinary differential equation of the fourth order, the solution of which is

$$f=c_1\cosh\frac{\alpha y}{b}+c_2\sinh\frac{\alpha y}{b}+c_3\cos\frac{\beta y}{b}+c_4\sin\frac{\beta y}{b} \qquad \text{(A4)}$$

where c_1, c_2, c_3, and c_4 are arbitrary constants and

$$\alpha=\pi\sqrt{\frac{b}{\lambda}}\sqrt{\frac{b}{\lambda}+\sqrt{k}}$$

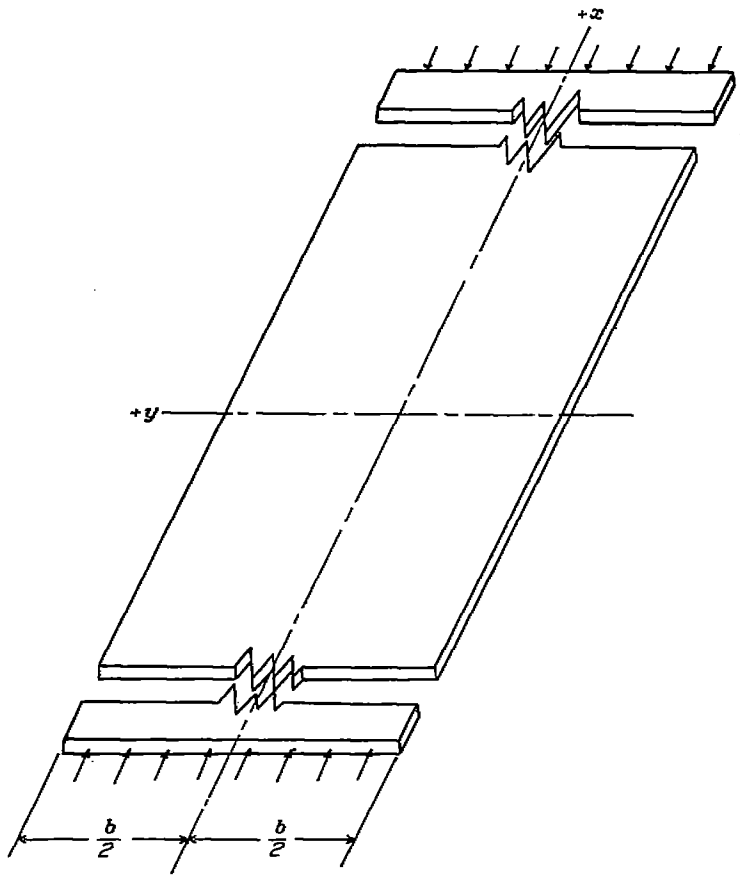

FIGURE 8.—Infinitely long flat plate under longitudinal compression.

$$\beta=\pi\sqrt{\frac{b}{\lambda}}\sqrt{\frac{b}{\lambda}+\sqrt{k}}$$

The deflection surface of the plate is now found by substituting this result for f in equation (A2):

$$w=\left(c_1\cosh\frac{\alpha y}{b}+c_2\sinh\frac{\alpha y}{b}+c_3\cos\frac{\beta y}{b}+c_4\sin\frac{\beta y}{b}\right)\cos\frac{\pi x}{\lambda} \qquad \text{(A5)}$$

In this solution, four conditions may be imposed along the unloaded edges to fix the four constants. One of the four conditions will always specify the presence of a moment $M_0\cos\frac{\pi x}{\lambda}$ along the near edge, and another will specify that the deflection w along this edge is zero. The remaining two conditions will be varied to suit the conditions at the far edge of the plate of which the stiffness is being computed.

Stiffness of a plate with far edge fixed.—Figure 9 shows a flat rectangular plate under compression with a moment M applied along one edge at $y=-\frac{b}{2}$ and with complete restraint against rotation along the parallel edge at $y=\frac{b}{2}$. The stiffness S of the plate is defined as

$$S=\left(\frac{M}{\theta}\right)_{y=-\frac{b}{2}} \tag{A6}$$

where $(\theta)_{y=-\frac{b}{2}}$ is the rotation of the edge at $y=-\frac{b}{2}$ expressed in quarter-radians.

The general expression (A5) for the deflection of the plate must be specialized to the case of figure 9 in which the boundary conditions are:

$$(w)_{y=\pm\frac{b}{2}}=0 \tag{A7}$$

$$-\overline{D}\left(\frac{\partial^2 w}{\partial y^2}+\mu\frac{\partial^2 w}{\partial x^2}\right)_{y=-\frac{b}{2}}=M=M_0\cos\frac{\pi x}{\lambda} \tag{A8}$$

$$\left(\frac{\partial w}{\partial y}\right)_{y=\frac{b}{2}}=0 \tag{A9}$$

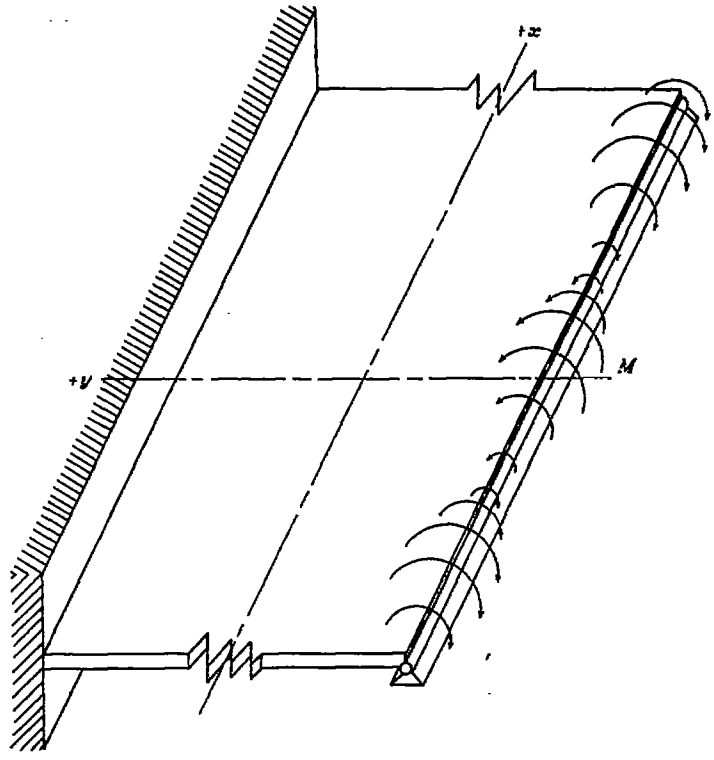

FIGURE 9.—Plate with moment applied at near edge, far edge fixed.

After determination of the arbitrary constants in equation (A5) by use of these boundary conditions, the deflection surface for the case of figure 9 is found to be

$$w=\frac{M_0 b^2}{\overline{D}(\alpha^2+\beta^2)}\left[\frac{\left(\alpha\tanh\frac{\alpha}{2}+\beta\tan\frac{\beta}{2}\right)\left(\frac{\sinh\frac{\alpha y}{b}}{\sinh\frac{\alpha}{2}}-\frac{\sin\frac{\beta y}{b}}{\sin\frac{\beta}{2}}\right)}{\alpha\tanh\frac{\alpha}{2}+\beta\tan\frac{\beta}{2}+\alpha\coth\frac{\alpha}{2}-\beta\cot\frac{\beta}{2}}-\frac{\left(\alpha\coth\frac{\alpha}{2}-\beta\cot\frac{\beta}{2}\right)\left(\frac{\cosh\frac{\alpha y}{b}}{\cosh\frac{\alpha}{2}}-\frac{\cos\frac{\beta y}{b}}{\cos\frac{\beta}{2}}\right)}{\alpha\tanh\frac{\alpha}{2}+\beta\tan\frac{\beta}{2}+\alpha\coth\frac{\alpha}{2}-\beta\cot\frac{\beta}{2}}\right]\cos\frac{\pi x}{\lambda} \tag{A10}$$

From this deflection surface there is obtained

$$(\theta)_{y=-\frac{b}{2}}=4\left(\frac{\partial w}{\partial y}\right)_{y=-\frac{b}{2}}=8\frac{Mb}{\overline{D}(\alpha^2+\beta^2)}\frac{1}{\frac{1}{\alpha\tanh\frac{\alpha}{2}+\beta\tan\frac{\beta}{2}}+\frac{1}{\alpha\coth\frac{\alpha}{2}-\beta\cot\frac{\beta}{2}}} \tag{A11}$$

where θ is expressed in quarter-radians. Substitution in equation (A6) gives

$$S=\frac{\overline{D}}{4b}\left[\left(\frac{\alpha}{2}\right)^2+\left(\frac{\beta}{2}\right)^2\right]\left(\frac{1}{\frac{\alpha}{2}\tanh\frac{\alpha}{2}+\frac{\beta}{2}\tan\frac{\beta}{2}}+\frac{1}{\frac{\alpha}{2}\coth\frac{\alpha}{2}-\frac{\beta}{2}\cot\frac{\beta}{2}}\right)=\frac{S^{II}}{1-C^2} \tag{A12}$$

Carry-over factor of a plate with far edge fixed.—The carry-over factor is defined as the ratio of the moment developed at the far edge $y=\frac{b}{2}$ (fig. 9) to the moment at the near edge $y=-\frac{b}{2}$. The moment developed at the far edge is

$$(M)_{y=\frac{b}{2}}=-\overline{D}\left(\frac{\partial^2 w}{\partial y^2}+\mu\frac{\partial^2 w}{\partial x^2}\right)_{y=\frac{b}{2}} \tag{A13}$$

where w is the deflection of the plate of figure 9, given by equation (A10).

If the indicated differentiation of equation (A10) is made and the result substituted in equation (A13), it is found that

$$(M)_{y=\frac{b}{2}}=\frac{\frac{\alpha}{2}\tanh\frac{\alpha}{2}+\frac{\beta}{2}\tan\frac{\beta}{2}-\frac{\alpha}{2}\coth\frac{\alpha}{2}+\frac{\beta}{2}\cot\frac{\beta}{2}}{\frac{\alpha}{2}\tanh\frac{\alpha}{2}+\frac{\beta}{2}\tan\frac{\beta}{2}+\frac{\alpha}{2}\coth\frac{\alpha}{2}-\frac{\beta}{2}\cot\frac{\beta}{2}}M_0\cos\frac{\pi x}{\lambda} \tag{A14}$$

The moment at the near edge is, from equation (A8),

$$(M)_{y=-\frac{b}{2}}=M_0 \cos \frac{\pi x}{\lambda} \tag{A15}$$

By definition, the carry-over factor is

$$C=\frac{-(M)_{y=\frac{b}{2}}}{(M)_{y=-\frac{b}{2}}}=\frac{\left(\frac{\alpha}{2}\tanh\frac{\alpha}{2}+\frac{\beta}{2}\tan\frac{\beta}{2}\right)-\left(\frac{\alpha}{2}\coth\frac{\alpha}{2}-\frac{\beta}{2}\cot\frac{\beta}{2}\right)}{\left(\frac{\alpha}{2}\tanh\frac{\alpha}{2}+\frac{\beta}{2}\tan\frac{\beta}{2}\right)+\left(\frac{\alpha}{2}\coth\frac{\alpha}{2}-\frac{\beta}{2}\cot\frac{\beta}{2}\right)} \tag{A16}$$

with the sign of the moment at the far edge changed to conform to the sign convention given in the section "Definitions."

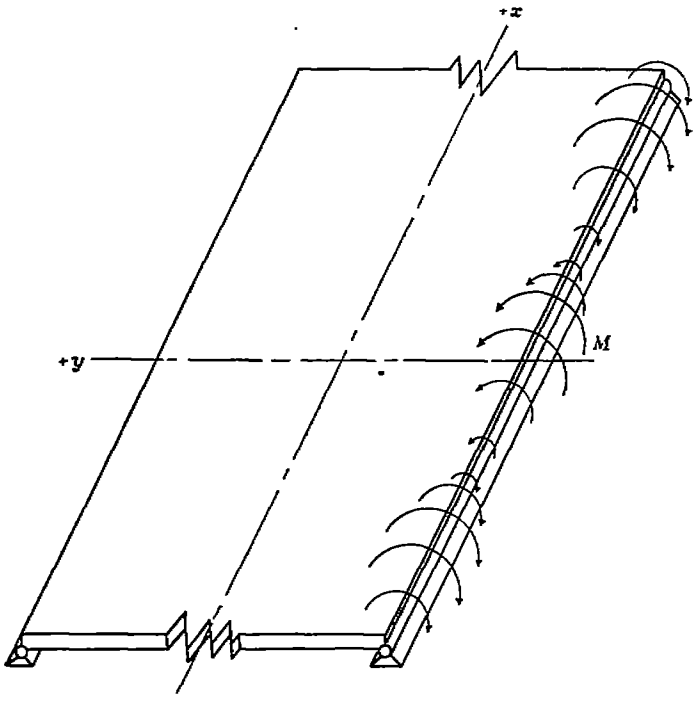

FIGURE 10.—Plate with moment applied at near edge, far edge hinged.

Stiffness of a plate with its far edge hinged.—Figure 10 shows a flat rectangular plate under compression with the two edges $y=\pm\frac{b}{2}$ hinged to supports. A moment M is applied to the edge $y=-\frac{b}{2}$, and the stiffness of the plate is defined as

$$S^{II}=\left(\frac{M}{\theta}\right)_{y=-\frac{b}{2}} \tag{A17}$$

where $(\theta)_{y=-\frac{b}{2}}$ is the rotation of the edge $y=-\frac{b}{2}$ expressed in quarter-radians. The general expression (A5) will again be used to compute θ and the boundary conditions will be:

$$(w)_{y=\pm\frac{b}{2}}=0 \tag{A18}$$

$$-\overline{D}\left(\frac{\partial^2 w}{\partial y^2}+\mu\frac{\partial^2 w}{\partial x^2}\right)_{y=-\frac{b}{2}}=M=M_0\cos\frac{\pi x}{\lambda} \tag{A19}$$

$$\left(\frac{\partial^2 w}{\partial y^2}+\mu\frac{\partial^2 w}{\partial x^2}\right)_{y=\frac{b}{2}}=0 \tag{A20}$$

By use of these boundary conditions, the arbitrary constants in equation (A5) may be computed, and it is found that the deflection surface for the case of figure 10 is

$$w=\frac{M_0 b^2}{2\overline{D}(\alpha^2+\beta^2)}\left[\frac{\sinh\frac{\alpha y}{b}}{\sinh\frac{\alpha}{2}}-\frac{\cosh\frac{\alpha y}{b}}{\cosh\frac{\alpha}{2}}+\frac{\cos\frac{\beta y}{b}}{\cos\frac{\beta}{2}}-\frac{\sin\frac{\beta y}{b}}{\sin\frac{\beta}{2}}\right]\cos\frac{\pi x}{\lambda} \tag{A21}$$

From this deflection surface, the magnitude of the rotation θ along the edge $y=-\frac{b}{2}$ is found to be

$$\begin{aligned}(\theta)_{y=-\frac{b}{2}}&=4\left(\frac{\partial w}{\partial y}\right)_{y=-\frac{b}{2}}\\&=\frac{2Mb}{\overline{D}(\alpha^2+\beta^2)}\left(\alpha\tanh\frac{\alpha}{2}+\beta\tan\frac{\beta}{2}+\alpha\coth\frac{\alpha}{2}-\beta\cot\frac{\beta}{2}\right)\end{aligned} \tag{A22}$$

where θ is expressed in quarter-radians. Upon substitution of this expression for θ in equation (A17), it is found that

$$S^{II}=\frac{\overline{D}}{b}\frac{\left(\frac{\alpha}{2}\right)^2+\left(\frac{\beta}{2}\right)^2}{\frac{\alpha}{2}\tanh\frac{\alpha}{2}+\frac{\beta}{2}\tan\frac{\beta}{2}+\frac{\alpha}{2}\coth\frac{\alpha}{2}-\frac{\beta}{2}\cot\frac{\beta}{2}} \tag{A23}$$

According to the boundary condition given in equation (A20), there is no moment at the edge $y=\frac{b}{2}$ Hence, the carry-over factor C^{II} with the far edge hinged is zero.

Stiffness of a plate with far edge free.—Figure 11 shows a flat rectangular plate under compression with one edge $y=b$ free and a moment M applied to the parallel edge $y=0$. The stiffness of the plate is defined as

$$S^{III}=\left(\frac{M}{\theta}\right)_{y=0} \tag{A24}$$

where $(\theta)_{y=0}$ is the rotation of the plate along the edge $y=0$ and is expressed in quarter-radians.

The general expression (A5) is used to compute the rotation θ. The boundary conditions for a plate with far edge free are:

$$(w)_{y=0}=0 \tag{A25}$$

$$-\overline{D}\left(\frac{\partial^2 w}{\partial y^2}+\mu\frac{\partial^2 w}{\partial x^2}\right)_{y=0}=M=M_0\cos\frac{\pi x}{\lambda} \tag{A26}$$

$$\left(\frac{\partial^2 w}{\partial y^2}+\mu\frac{\partial^2 w}{\partial x^2}\right)_{y=b}=0 \tag{A27}$$

$$\left[\frac{\partial^3 w}{\partial y^3}+(2-\mu)\frac{\partial^3 w}{\partial x^2\partial y}_{y=b}=\right]0 \tag{A28}$$

Upon determination of the arbitrary constants in equation (A5) by use of these boundary conditions, the deflection surface for the case of figure 11 is found to be

$$w=\frac{M_0b^2}{\overline{D}(\alpha^2+\beta^2)}\left[\cos\frac{\beta y}{b}-\cosh\frac{\alpha y}{b}+\Phi\sinh\frac{\alpha y}{b}-\frac{n\alpha(\sinh\alpha-\Phi\cosh\alpha)-m\beta\sin\beta}{m\beta\cos\beta}\sin\frac{\beta y}{b}\right]\cos\frac{\pi x}{\lambda} \tag{A29}$$

where

$$m=\left(\frac{\alpha}{2}\right)^2-\mu\left(\frac{\pi b}{2\lambda}\right)^2 \qquad n=\left(\frac{\beta}{2}\right)^2+\mu\left(\frac{\pi b}{2\lambda}\right)^2$$

$$\Phi=\frac{m^2\beta\cosh\alpha\cos\beta-n^2\alpha\sinh\alpha\sin\beta+mn\beta}{m^2\beta\sinh\alpha\cos\beta-n^2\alpha\cosh\alpha\sin\beta}$$

From the deflection surface, the rotation along the edge $y=0$ is found to be

$$(\theta)_{y=0}=4\left(\frac{\partial w}{\partial y}\right)_{y=0}=\left[\frac{4Mb}{\overline{D}(\alpha^2+\beta^2)}\right]\frac{2\alpha\beta mn+\alpha\beta(m^2+n^2)\cosh\alpha\cos\beta+(m^2\beta^2-n^2\alpha^2)\sinh\alpha\sin\beta}{m^2\beta\sinh\alpha\cos\beta-n^2\beta\cosh\alpha\sin\beta} \tag{A30}$$

where θ is expressed in quarter-radians. Upon substitution of this expression for θ in equation (A24), the stiffness is found to be

$$S^{\mathrm{III}}=\frac{\overline{D}}{b}\left[\left(\frac{\alpha}{2}\right)^2+\left(\frac{\beta}{2}\right)^2\right]$$

$$\left[\frac{\frac{\beta}{2}m^2\left(1-\tan^2\frac{\beta}{2}\right)\tanh\frac{\alpha}{2}-\frac{\alpha}{2}n^2\left(1+\tanh^2\frac{\alpha}{2}\right)\tan\frac{\beta}{2}}{\frac{2mn\frac{\alpha}{2}\frac{\beta}{2}}{\cosh^2\frac{\alpha}{2}\cos^2\frac{\beta}{2}}+\left(\frac{\alpha}{2}\right)\left(\frac{\beta}{2}\right)\left(m^2+n^2\right)\left(1+\tanh^2\frac{\alpha}{2}\right)\left(1-\tan^2\frac{\beta}{2}\right)+4\left[m^2\left(\frac{\beta}{2}\right)^2-n^2\left(\frac{\alpha}{2}\right)^2\tanh\frac{\alpha}{2}\tan\frac{\beta}{2}\right]}\right] \tag{A31}$$

The trigonometric and hyperbolic functions have been converted to the half angle in order that the same functions can be used as in the calculation of the other stiffnesses.

According to the boundary condition of equation (A27), there is no moment along the edge $y=b$. The carry-over factor C^{III} is thus zero for the far edge free.

Stiffness of a plate with equal and opposite moments applied along the unloaded edges.—Figure 12 shows a flat rectangular plate under compression, with equal and opposite moments applied to the edges $y=\pm\frac{b}{2}$. The stiffness of the plate is defined as

$$S^{\mathrm{IV}}=\left(\frac{M}{\theta}\right)_{y=-\frac{b}{2}} \tag{A32}$$

where $(\theta)_{y=-\frac{b}{2}}$ is the rotation along the edge $y=-\frac{b}{2}$ expressed in quarter-radians.

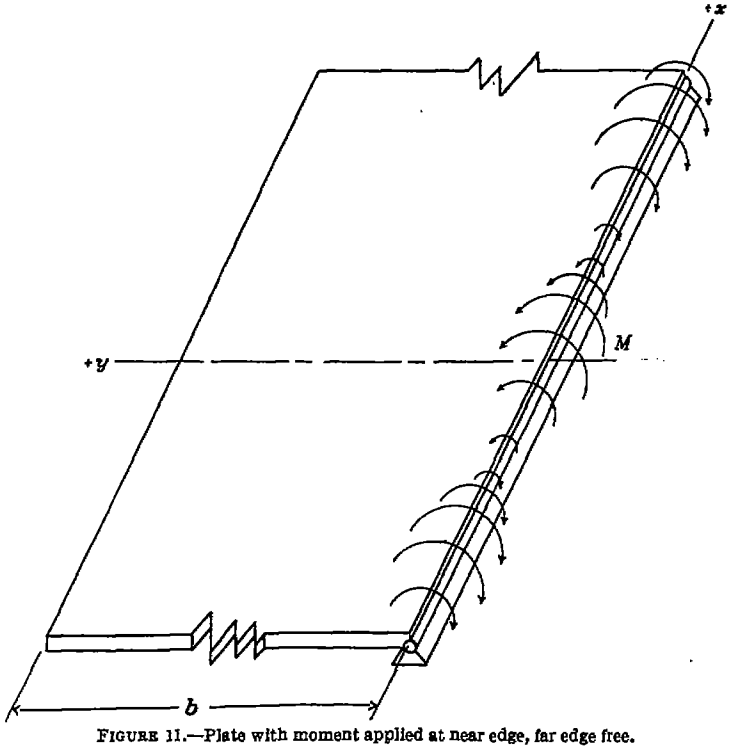

FIGURE 11.—Plate with moment applied at near edge, far edge free.

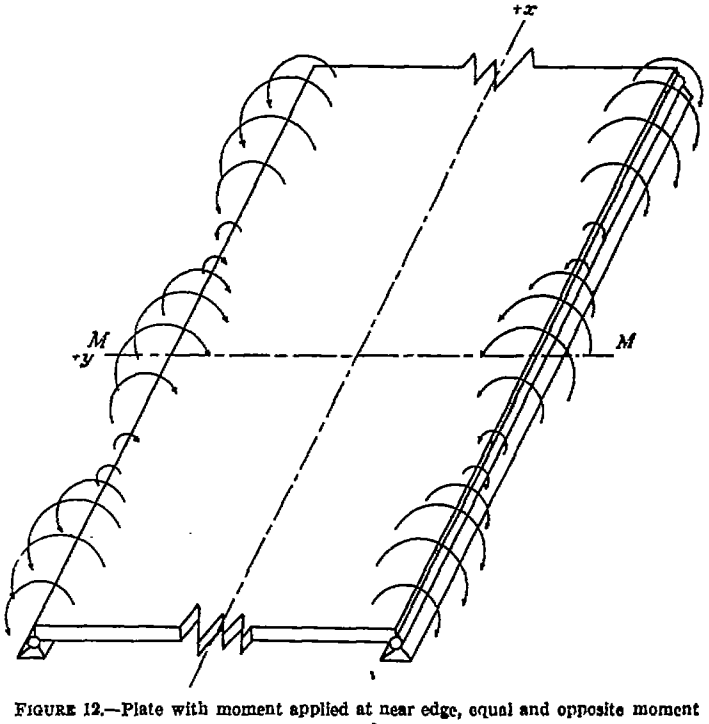

FIGURE 12.—Plate with moment applied at near edge, equal and opposite moment at far edge.

The boundary conditions for this case are:

$$(w)_{y=\pm\frac{b}{2}}=0 \tag{A33}$$

$$\overline{D}\left(\frac{\partial^2 w}{\partial y^2}+\mu\frac{\partial^2 w}{\partial x^2}\right)_{y=\pm\frac{b}{2}}=-M=-M_0\cos\frac{\pi x}{\lambda} \tag{A34}$$

According to the sign convention of the appendix, the moments at the two edges have the same sign although they act in opposite directions. By means of these boundary conditions, the arbitrary constants in equation (A5) may be computed, and the deflection surface for the case of figure 12 is found to be

$$w=\frac{M_0 b^2}{\overline{D}(\alpha^2+\beta^2)}\left(\frac{\cos\frac{\beta y}{b}}{\cos\frac{\beta}{2}}-\frac{\cosh\frac{\alpha y}{b}}{\cosh\frac{\alpha}{2}}\right)\cos\frac{\pi x}{\lambda} \tag{A35}$$

From this deflection surface, the rotation θ along the edge $y=-\frac{b}{2}$ is found to be

$$(\theta)_{y=-\frac{b}{2}}=4\left(\frac{\partial w}{\partial y}\right)_{y=-\frac{b}{2}}=\frac{2Mb}{\overline{D}\left[\left(\frac{\alpha}{2}\right)^2+\left(\frac{\beta}{2}\right)^2\right]}\left(\frac{\alpha}{2}\tanh\frac{\alpha}{2}+\frac{\beta}{2}\tan\frac{\beta}{2}\right) \tag{A36}$$

which is expressed in quarter-radians. Substitution of this expression for θ in equation (A32) gives the stiffness of the plate,

$$S^{IV}=\frac{\overline{D}}{2b}\frac{\left(\frac{\alpha}{2}\right)^2+\left(\frac{\beta}{2}\right)^2}{\frac{\alpha}{2}\tanh\frac{\alpha}{2}+\frac{\beta}{2}\tan\frac{\beta}{2}}=\frac{S^{II}}{1+C} \tag{A37}$$

Because the moment at $y=\frac{b}{2}$ is equal and opposite to that at $y=-\frac{b}{2}$, the carry-over factor C^{IV} is -1 in accordance with the sign convention given in the section "Definitions."

PLATE UNDER TENSION

If the direction of the applied longitudinal force on the plate of figure 8 is reversed, the plate will be under tension and equation (A1) will become

$$\frac{\partial^4 w}{\partial x^4}+2\frac{\partial^4 w}{\partial x^2\partial y^2}+\frac{\partial^4 w}{\partial y^4}-\frac{\pi^2 k}{b^2}\frac{\partial^2 w}{\partial x^2}=0 \tag{A38}$$

The formal solution of this equation is precisely the same as equation (A5), except that the parameters α and β are now defined by

$$\alpha=\pi\sqrt{\frac{b}{\lambda}}\sqrt{\frac{b}{\lambda}+i\sqrt{k}} \tag{A39}$$

$$\beta=\pi\sqrt{\frac{b}{\lambda}}\sqrt{-\frac{b}{\lambda}+i\sqrt{k}} \tag{A40}$$

Because the stiffnesses S, S^{II}, S^{III}, and S^{IV}, and the carry-over factor C, as calculated for a plate under compression, are based directly upon equation (A5), it follows that the expression derived for each one of these quantities is still correct when the plate is under tension, provided α and β are now given by equations (A39) and (A40).

The new expressions for α and β are complex and may be written in the form

$$\frac{\alpha}{2}=A+iB \tag{A41}$$

$$\frac{\beta}{2}=B+iA \tag{A42}$$

where

$$A=\frac{\pi}{2}\sqrt{\frac{b}{2\lambda}}\sqrt{\sqrt{\left(\frac{b}{\lambda}\right)^2+k}+\frac{b}{\lambda}} \tag{A43}$$

$$B=\frac{\pi}{2}\sqrt{\frac{b}{2\lambda}}\sqrt{\sqrt{\left(\frac{b}{\lambda}\right)^2+k}-\frac{b}{\lambda}} \tag{A44}$$

The expressions (A41) and (A42) for α and β are substituted into equations (A12) for S, equation (A23) for S^{II}, equation (A31) for S^{III}, equation (A37) for S^{IV}, and equation (A16) for C. The results of the substitution show that, for a plate in tension,

$$S=\frac{\overline{D}}{b}\frac{AB}{2}\frac{A\sin 4B-B\sinh 4A}{A^2\sin^2 2B-B^2\sinh^2 2A} \tag{A45}$$

$$S^{II}=\frac{\overline{D}}{b}4AB\frac{(\cosh 2A+\cos 2B)(\sinh^2 A+\sin^2 B)}{B\sinh 4A-A\sin 4B} \tag{A46}$$

$$S^{III}=\frac{D}{b}AB\frac{A(m^2-16A^2B^2+8mB^2)\sin 4B-B(m^2-16A^2B^2-8mA^2)\sinh 4A}{\left\{\begin{array}{l}B^2(m-4A^2)^2-A^2(m+4B^2)^2\\-(A^2+B^2)(m^2-16A^2B^2)(\cosh^2 2A\cos^2 2B+\sinh^2 2A\sin^2 2B)\\+[A^2(m+4B^2)^2-B^2(m-4A^2)^2](\sinh^2 2A\cos^2 2B+\cosh^2 2A\sin^2 2B)\end{array}\right.} \tag{A47}$$

$$S^{IV}=\frac{\overline{D}}{b}AB\frac{\cosh 2A+\cos 2B}{B\sinh 2A+A\sin 2B} \tag{A48}$$

$$C=\frac{A\cosh 2A\sin 2B-B\sinh 2A\cos 2B}{B\cosh 2A\sinh 2A-A\sin 2B\cos 2B} \tag{A49}$$

where

$$m=4(A^2-B^2)-\mu\left(\frac{\pi b}{\lambda}\right)^2 \tag{A50}$$

These formulas permit tables of stiffnesses and carry-over factors to be prepared for a plate in tension similar to the tables of reference 5 for a plate in compression. Such tables, however, have not been prepared, and in lieu of them, formulas (A45) to (A49) may be used directly if the need should arise.

843107—50——6

REFERENCES

1. Cross, Hardy: Analysis of Continuous Frames by Distributing Fixed-End Moments. Trans. A. S. C. E., vol. 96, 1932, pp. 1–10.
2. James, Benjamin Wylie: Principal Effects of Axial Load on Moment-Distribution Analysis of Rigid Structures. NACA TN No. 534, 1935.
3. Lundquist, Eugene E.: Stability of Structural Members under Axial Load. NACA TN No. 617, 1937.
4. Lundquist, Eugene E., and Kroll, W. D.: Tables of Stiffness and Carry-Over Factor for Structural Members under Axial Load. NACA TN No. 652, 1938.
5. Kroll, W. D.: Tables of Stiffness and Carry-Over Factor for Flat Rectangular Plates under Compression. NACA ARR No. 3K27, 1943.
6. Southwell, R. V.: On the Analysis of Experimental Observations in Problems of Elastic Stability. Proc. Roy. Soc. (London), ser. A, vol. 135, April 1, 1932, pp. 601–616.
7. Lundquist, Eugene E.: Generalized Analysis of Experimental Observations in Problems of Elastic Stability. NACA TN No. 658, 1938.
8. Lundquist, Eugene E.: A Method of Estimating the Critical Buckling Load for Structural Members. NACA TN No. 717, 1939.
9. Lundquist, Eugene E., and Stowell, Elbridge Z.: Critical Compressive Stress for Outstanding Flanges. NACA Rep. No. 734, 1942.
10. Lundquist, Eugene E., and Stowell, Elbridge Z.: Critical Compressive Stress for Flat Rectangular Plates Supported along All Edges and Elastically Restrained against Rotation along the Unloaded Edges. NACA Rep. No. 733, 1942.
11. Kroll, W. D., Fisher, Gordon P., and Heimerl, George J.: Charts for Calculation of the Critical Stress for Local Instability of Columns With I-, Z-, Channel, and Rectangular-Tube Section. NACA ARR No. 3K04, 1943.
12. Timoshenko, S.: Theory of Elastic Stability. McGraw-Hill Book Co., Inc., 1936.

TABLE I

RESULTS FOR SOLUTION OF BAR PROBLEM [1]

[For member ef, $P=0$, $P/A=0$, $\overline{E}=28\times10^6$ lb/sq in., $(L/j)_{eff}=0$, and $S^{II}_{ef}=3.397\times10^6$ lb-in.]

c	Members bc and de				Member cd				Member bc		Member cd		Member de		S^{I}_{de} (lb-in.)	S^{I}_{ed} (lb-in.)	r
	P (lb)	$\frac{P}{A}$ (lb/sq in.)	$\overline{E}$ (lb/sq in.)	$\left(\frac{L}{j}\right)_{eff}$	P (lb)	$\frac{P}{A}$ (lb/sq in.)	$\overline{E}$ (lb/sq in.)	$\left(\frac{L}{j}\right)_{eff}$	S_{bc} (lb-in.)	$S^{2}_{bc}C^{2}_{bc}$ (lb²-in.²)	C^{2}_{cd}	S^{III}_{cd} (lb-in.)	C^{2}_{de}	S^{III}_{de} (lb-in.)			
1.4	9,280	29,130	17.30×10^6	3.72	8,040	25,230	23.49×10^6	2.97	1.404×10^4	5.45×10^6	0.1224	5.07×10^4	2.783	-2.49×10^4	2,613	51,010	0.132
1.5	9,430	29,590	16.39	3.85	8,170	25,620	22.98	3.03	1.155	5.24	.1197	5.01	3.989	−3.41	−32.69	50,100	.138
1.6	9,550	29,990	15.59	3.97	8,270	25,970	22.52	3.08	.930	5.07	.1174	4.95	5.964	−4.56	−3,476	49,200	.145
1.7	9,670	30,340	14.84	4.10	8,370	26,270	22.09	3.12	.699	4.99	.1151	4.90	10.22	−5.44	−5,159	48,320	.153
1.8	9,770	30,660	14.16	4.22	8,460	26,550	21.69	3.17	.484	4.94	.1130	4.85	22.94	−10.01	−7,832	47,460	.161
1.9	9,860	30,940	13.52	4.33	8,540	26,790	21.32	3.21	.289	4.88	.1112	4.80	58.42	−16.59	−10,340	46,560	.200
2.0	9,940	31,190	12.98	4.44	8,610	27,010	20.99	3.25	.095	4.92	.1096	4.76	545.3	−51.71	−13,140	45,680	.226
2.1	10,010	31,420	12.44	4.55	8,670	27,210	20.68	3.29	−.101	4.99	.1077	4.72	485.8	49.12	−16,150	44,700	.261
2.2	10,080	31,630	11.96	4.66	8,730	27,390	20.38	3.32	−.302	5.13	.1064	4.68	56.23	15.68	−19,590	43,450	.314
2.3	10,140	31,820	11.49	4.77	8,780	27,560	20.12	3.35	−.512	5.34	.1051	4.65	22.72	10.25	−22,020	42,470	.363
2.4	10,190	31,990	11.10	4.86	8,820	27,700	19.89	3.38	−.688	5.54	.1040	4.62	12.47	7.51	−26,050	40,700	.194
2.5	10,240	32,150	10.71	4.96	8,870	27,840	19.63	3.41	−.896	5.88	.1026	4.58	7.619	5.73	−31,210	37,540	.720
2.6	10,290	32,300	10.34	5.06	8,910	27,970	19.41	3.44	−1.118	6.33	.1014	4.56	5.189	4.57	−37,610	30,870	1.63
2.7	10,340	32,440	9.99	5.16	8,950	28,090	19.21	3.46	−1.361	6.91	.1006	4.53	3.798	3.73	−46,050	−8,760	1.38
2.8	10,380	32,570	9.66	5.26	8,990	28,210	18.99	3.49	−1.633	7.71	.0994	4.50	2.930	3.095	−58,070	80,560	.187
2.9	10,410	32,680	9.38	5.35	9,020	28,300	18.85	3.51	−1.911	8.69	.0986	4.48	2.402	2.633	−74,590	69,180	.533
3.0	10,450	32,790	9.10	5.44	9,050	28,400	18.66	3.53	−2.227	9.96	.0978	4.45	2.023	2.239	−102,200	53,820	1.00

[1] Table is from reference 3, table III.

TABLE II

RESULTS FOR SOLUTION OF PLATE PROBLEM

k_F (step 4)	k_W (step 4)	$\frac{S^{IV}_W}{(\overline{D}/b)_W}$	$\frac{S^{IV}_W}{(\overline{D}/b)_W}\left(\frac{t_W}{t_F}\right)^3\left(\frac{b_F}{b_W}\right)$	$\frac{S^{III}_F}{(\overline{D}/b)_F}$	U (step 5)	$(k_W)_{U=0}$ (step 6)
$\frac{\lambda}{b_F}=1.2,\ \frac{\lambda}{b_W}=0.6$						
0.8	3.2	1.6820	0.8410	0.7555	1.5965	4.645
.9	3.6	1.4838	.7419	.5994	1.3413	
1.0	4.0	1.2370	.6185	.3729	.9914	
1.2	4.8	.4937	.2468	−.6729	−.4261	
$\frac{\lambda}{b_F}=2.0,\ \frac{\lambda}{b_W}=1.0$						
0.7	2.8	0.5907	0.2954	−0.0621	0.2333	3.104
.8	3.2	.4221	.2111	−.3040	−.0929	
.9	3.6	.2275	.1137	−.6548	−.5411	
1.0	4.0	0	0	−1.2117	−1.2117	
$\frac{\lambda}{b_F}=3.0,\ \frac{\lambda}{b_W}=1.5$						
0.7	2.8	0.4373	0.2186	−0.1640	0.0546	2.944
.8	3.2	.3568	.1784	−.2868	−.1084	
.9	3.6	.2706	.1353	−.4351	−.2998	
1.0	4.0	.1781	.0890	−.6179	−.5289	
$\frac{\lambda}{b_F}=4.0,\ \frac{\lambda}{b_W}=2.0$						
0.7	2.8	0.4448	0.2224	−0.1166	0.1058	3.292
.8	3.2	.4008	.2004	−.1799	.0205	
.9	3.6	.3551	.1775	−.2501	−.0726	
1.0	4.0	.3076	.1538	−.3285	−.1747	