REPORT No. 810

ANALYSIS AND MODIFICATION OF THEORY FOR IMPACT OF SEAPLANES ON WATER

By Wilbur L. Mayo

SUMMARY

An analysis of available theory on seaplane impact and a proposed modification thereto are presented. In previous methods the over-all momentum of the float and virtual mass has been assumed to remain constant during the impact but the present analysis shows that this assumption is rigorously correct only when the resultant velocity of the float is normal to the keel. The proposed modification chiefly involves consideration of the fact that forward velocity of the seaplane float causes momentum to be passed into the hydrodynamic downwash (an action that is the entire consideration in the case of the planing float) and consideration of the fact that, for an impact with trim, the rate of penetration is determined not only by the velocity component normal to the keel but also by the velocity component parallel to the keel, which tends to reduce the penetration.

The analysis of previous treatments includes a discussion of each of the important contributions to the solution of the impact problem. The development of the concept of flow in transverse planes, the momentum equations, the aspect-ratio corrections, the effect of the generated wave on the virtual mass, the distribution of surface pressure, and the conditions for maximum impact force are discussed in detail. Impact treatments based on flow in longitudinal planes, as for bodies of very high aspect ratio, have been omitted since they seemed to be of no interest for the problem of the typical float.

The momentum passed to the downwash is evaluated as the product of the momentum of the flow in the transverse plane at the step by the rate at which such planes slide off the step. Simple equations are given that permit the use of planing data to evaluate empirically the momentum of the flow in the transverse plane at the step. On the basis of such study, modification of the general equations of the previous theory is supplemented by modification of the formula for the momentum of the flow in the plane element. This improvement can be made because the flow in the plane is independent of the flight-path angle.

Experimental data for planing, oblique impact, and vertical drop are used to show that the accuracy of the proposed theory is good. Wagner's theory, which has been the most popular theory up to the present, is compared with the new theory and with recent data for oblique impacts. The data show that the loads calculated by Wagner's equation are excessive, particularly for high trims. Use in this equation of the proposed formula for the momentum of the flow in the planes reduces the calculated force but the values are still excessive.

INTRODUCTION

A number of theoretical papers on the impact of seaplanes on water were published between 1929 and 1938 but the proposals presented were not generally accepted. Because an adequate theory on which to base revision of design requirements was needed, an analysis of previously published work was undertaken at the Langley Memorial Aeronautical Laboratory.

The analysis was concerned chiefly with the treatments that took proper cognizance of the low aspect ratio of the seaplane float. These treatments were commonly based on the assumption that the over-all momentum of the seaplane and hydrodynamic virtual mass remains constant during the impact. The chief difference between the treatments was in the determination of the magnitude of the virtual mass.

In the present paper a critical survey of the previous treatments and a proposed theory are presented. Inconsistencies in the previous theory, which appear to invalidate it when a component of motion parallel to the keel exists, are shown. The proposed theory, based essentially on accepted physical concepts, provides a logically consistent and unified treatment, which is applicable through the entire range of oblique impact, including the end point of the planing float. Planing data and data for oblique and vertical impacts made in the Langley impact basin are analyzed to show the general applicability of the proposed methods.

A similar analysis and modification was first prepared in 1941 but was given only limited circulation. Further development followed as more modern test results, particularly those from the Langley impact basin, became available. The present report has been prepared in order to give the theory in a form considerably shorter and better confirmed by experiment than the earlier version.

SYMBOLS

β angle of dead rise

γ angle between flight path and plane of water surface

τ angle of hull keel with respect to plane of water surface

V resultant velocity
V_v vertical velocity
V_{v_0} vertical velocity at instant of contact
V_n velocity normal to keel
V_{n_0} velocity normal to keel at instant of contact
V_h horizontal velocity
m mass of seaplane
m_r mass of seaplane corrected for eccentric impact
m_w virtual mass associated with hydrodynamic flow beneath float
x half-width of flat-plate equivalent of bottom
l length of wetted area
y depth of immersion, normal to plane of water surface
t time
u effective bottom slope (dy/dx)
F resultant hydrodynamic force
$n_{t_{w_{max}}}$ maximum hydrodynamic force normal to plane of water surface divided by weight of seaplane
W total weight of seaplane
g acceleration due to gravity
ρ mass density of fluid

Where units are not specified any consistent system of units may be used.

REVIEW OF PREVIOUS LITERATURE

VON KÁRMÁN

Basic theory.—The earliest impact theory, and apparently that upon which all subsequent work has been based, was advanced by von Kármán (reference 1).

Von Kármán considers a wedge-shape body dropped vertically into a horizontal water surface; the total momentum of the wedge and the virtual mass of the flow are assumed to remain constant. With the assumption of two-dimensional flow in planes normal to the keel line, von Kármán considers that at each instant the virtual mass is equal to the mass of water contained in a semicylinder of length equal to the length of the wedge and of diameter equal to the width of the wedge at the plane of the water surface. The following sketch is a cross-sectional view of the wedge and the water mass:

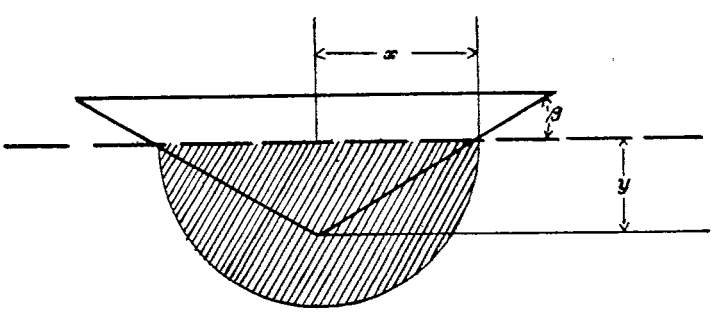

The momentum equation of reference 1 is written

$$mV_{v_0}=mV_v+\frac{1}{2}\rho\pi x^2 l V_v \tag{1}$$

This equation leads to the following equation for force:

$$F=\frac{V_{v_0}{}^2\rho\pi x l\cot\beta}{\left(1+\frac{\rho\pi x^2 l}{2m}\right)^3} \tag{2}$$

In the case of the flat bottom the force equation (2) yields an infinite force. Von Kármán considers the effect of compressibility of the water in reducing these loads for the flat bottom. In reference 1, for a vertical velocity of about 6 feet per second, a pressure of the order of 425 pounds per square inch is calculated and the elasticity of the structure is concluded to be an important consideration in such a case.

Comparison with tests.—Von Kármán divides the force equation (2) by the area of the float in the plane of the water surface to obtain an average pressure and compares this average pressure at the instant of contact (that is, for very small values of x) with the experimental pressures reported in reference 2. Von Kármán observes that this equation agrees approximately with the pressure data if the vertical velocity is assumed to be of the order of the sinking speed before flare-off.

Later tests show that the flare-off during landing reduces the vertical velocity at contact to a fraction of the sinking speed of the airplane before flare-off. Furthermore, local pressures may be considerably greater than the average pressure. Data from tests of a modern flying boat, which included measured vertical velocities, showed pressures much greater than those computed by von Kármán's formula.

PABST

Introduction of V_n, m_r, and aspect-ratio correction.—Pabst (reference 3) considers the velocity of penetration to be represented by the velocity normal to the keel rather than by the vertical velocity. The two velocities may be quite different when the trim is not zero; for example, in the limiting case of a pure planing motion, the resultant velocity may have a large component normal to the keel but the vertical component of velocity is equal to zero. The full implications of this change will be developed in subsequent discussion.

Pabst also points out in reference 3 that, if the point of impact is not directly below the center of gravity, the eccentricity of the impact is taken into consideration by multiplying the mass of the seaplane m by the factor $\frac{i^2}{i^2+r^2}$, in which i is the radius of gyration of the airplane about the center of gravity and r is the distance from the center of pressure to the center of gravity. This reduction of the mass introduces two problems. First, instead of the decrease in velocity according to impact theory previously developed, V_n may actually increase during the impact due to change in trim and the peak force may occur at an increased rather than a reduced V_n. Second, the reduced mass of the seaplane will vary during the impact as a result of the variation of the eccentricity of the impact due to shift of the center of pressure.

By applying these modifications and introducing an empirically determined aspect-ratio factor in the equation originally given by von Kármán, Pabst obtained the following equation for the impact force:

$$F=\frac{V_{n_0}{}^2\pi\rho\left(xl-\frac{3x^2}{2}\right)\cot\beta}{\left(1+\frac{m_w}{m_r}\right)^3} \tag{3}$$

in which the virtual mass m_w is equal to $\frac{\pi\rho x^2 l}{2}\left(1-\frac{x}{l}\right)$ when l is greater than $2x$ and the factor $1-\frac{x}{l}$ is an empirical aspect-ratio correction (determined by vibration of submerged plates).

In a later publication (reference 4) Pabst presents the following equation, which is apparently an empirical revision of his first equation (equation (3)):

$$F=\frac{V_{n_0}{}^2\rho l^2 0.786e^{-0.114\frac{l}{x}}\cot\beta}{\left(1+\frac{m_w}{m_r}\right)^3} \tag{4}$$

in which $l^2 0.786e^{-0.114\frac{l}{x}}$ replaces the term $\pi\left(xl-\frac{3}{2}x^2\right)$ of equation (3). The virtual mass in equation (4) is

$$\frac{\pi\rho}{2}\frac{l^2x^2}{\sqrt{l^2+4x^2}}\left(1-0.850\frac{lx}{l^2+4x^2}\right)$$

instead of

$$\frac{\pi\rho x^2 l}{2}\left(1-\frac{x}{l}\right)$$

as in equation (3).

A formula for maximum pressure that is the same as that of von Kármán except for the replacement of V_s by V_n is presented by Pabst in reference 3.

Elasticity.—Pabst's consideration of the flat-bottom float (an angle of dead rise of 0°) is concerned with the effect of elasticity of the seaplane in determining the hydrodynamic force. Pabst presents equations for various spring-and-mass combinations but obtains a solution only for the case of a rigid massless float connected to a rigid seaplane by a massless spring.

As has been noted, when the effect of elasticity is neglected, a theoretical curve of impact force against angle of dead rise approaches infinity as the angle of dead rise approaches zero. In order to take into account elasticity at low angles of dead rise without making a complete analysis, Pabst proposes that, in the low-angle range, the curve be changed into its tangent passing through the point calculated for 0° angle of dead rise.

Comparison with tests.—A point representing force recorded on Bottomley's float of 20½° angle of dead rise (reference 5), which apparently was corrected to 10° by one of Pabst's equations in order to correspond to Pabst's data for 9½° angle of dead rise, was found to lie between the rigid-body curve and the tangent line drawn to approximate the effects of elasticity of the structure at small angles of dead rise. Although this agreement is good, further study indicates that Pabst's equation can agree with Bottomley's data only within a very limited velocity range.

Pabst presents flight data in a plot of vertical force on the float against the longitudinal position of the hydrodynamic center of pressure (reference 4). If the loaded area is assumed to be proportional to the distance of the center of pressure from the step, the slope of a line from the step location on the abscissa of this plot to an experimental point represents an average pressure for the impact represented by the point. For a particular seaplane, on the basis that the average pressure is determined chiefly by the flight parameters and that the flight parameters causing highest pressures are approached for various positions of the center of pressure (variation of the center-of-pressure position due chiefly to seaway), the maximum points for positions of the center of pressure ranging from the step to the center of the float tend to lie along the same sloping line.

The experimental program conducted by Pabst consisted of successive tests of flat and V-bottom floats installed on the same seaplane. Limit lines of the type discussed in the previous paragraph were drawn for both sets of data. Pabst showed that the ratio of the slopes of these experimental limit lines was 0.8 and observed that the theoretical ratio of the slopes of these lines was 0.7 (reference 4).

Pabst's correlation of flight data indicates that the theory gives values of the proper order; however, the accuracy of the correlation is questionable because of the many approximations involved in drawing and interpreting the limit lines, computing the flat-bottom force, and computing the V-bottom force. Aside from these uncertainties, direct proof of the theory requires evaluation of the absolute slope of these lines rather than their relative slopes.

WAGNER

Virtual mass.—With the object of approximately accounting for the wave generated by the float, Wagner (references 6 and 7) presents a solution which gives a value of the virtual mass different from that of von Kármán and Pabst. As has been noted, von Kármán and Pabst defined the virtual mass (for two-dimensional flow) as the mass of the volume of fluid contained in a semicylinder of diameter equal to the width of the float in the plane of the water surface. This virtual mass corresponds to one-half that given by conventional hydrodynamic theory for submerged motion of ellipses with width equal to the width of the float in the plane of the water surface and therefore constitutes a first approximation for the case of an object passing through the water surface.

Wagner considered that, since the water displaced by an immersing float rises along the sides of the float, the width of the wetted surface and the virtual mass of the flow are greater than those based on the float width in the plane of the undisturbed water surface. In order to evaluate the increased width, Wagner assumed that the particles at the top of the upflow or generated wave move vertically upward and, with differences in elevation due to slope of the generated wave neglected, these particles move in accordance with the following equation for the velocity distribution in the plane of a flat plate in immersed motion (reference 6):

$$V_z=V\sqrt{1-\frac{x^2}{x_p{}^2}} \tag{5}$$

where

V_z velocity of particle passing through plane of plate in getting around the plate

V velocity of free stream relative to plate

x_p distance from particle in plane of plate to center of plate ($x_p>x$)

Considering x as the float width at the top of the wave and x_p as the distance from a particle in the wave to the plane of symmetry of the float, Wagner integrated equation (5) to determine x as a function of the depth of immersion. For the case of triangular cross section, solution for x yielded a value equal to $\pi/2$ times the half-width of the float in the plane of the water surface. Wagner defined the virtual mass as the mass of a semicylinder with diameter equal to $2x$. Thus, for the case of the triangular V-bottom, the virtual mass specified by Wagner is $(\pi/2)^2$ times the virtual mass specified by von Kármán and Pabst. The significance of this difference is evident from the fact that it results in a 2.47:1 increase of the force calculated for a specific draft and velocity.

The assumptions that the particles in the wave move vertically according to equation (5) and that the float width at the top of the wave determines the virtual mass seem very arbitrary. The most direct evidence that the method is inadequate lies in the fact that a later and more exact solution for the case of triangular cross section gives values that are substantially different. Although the method is inadequate it remains important because a better solution for the case of the float bottom with transverse curvature has not been provided.

Pressure distribution.—Continuing along the same lines, Wagner (reference 6) stated that the maximum pressure exists at the top of the calculated wave and equals the dynamic pressure based on a velocity equal to the rate of increase of the float half-width at this point. Although this assumption may be lacking in rigor, improvement is not attempted in the present paper.

If the momentum of the float and the virtual mass is assumed constant, the equation for maximum pressure is

$$p_{max}=\frac{\rho}{2}\frac{V_{e_0}^2}{\left(1+\frac{m_w}{m}\right)^2}\frac{1}{u^2} \tag{6}$$

where

p_{max} maximum pressure

V_{e_0} initial rate of effective penetration, $V_v+(V-V_{wi})\tau+V_w\tau_w$ (approx. equal to V_n)

V_{wi} wind velocity

V_w wave velocity

τ_w angle of wave slope

Wagner presented the following equation for determining the pressures, other than the maximum, on the bottom at a given instant:

$$p=\frac{\rho V_{e_0}^2}{\left(1+\frac{m_w}{m_\tau}\right)^2}\frac{1}{u}\left[\frac{1}{\sqrt{1-\frac{x_p^2}{x^2}}}-\frac{2}{1+\frac{m_\tau}{m_w}}\sqrt{1-\frac{x_p^2}{x^2}}-\frac{u}{2\left(\frac{x^2}{x_p^2}-1\right)}\right] \tag{7}$$

where

p pressure at a point $x_p<x$ (curve to be faired into solution of equation (6) for $x_p=x$)

x_p horizontal distance from point for which pressure is calculated to center of float

The present paper gives an improved theoretical method for determining the instantaneous velocities subsequent to the initial contact velocities which may lead to large corrections to equations (6) and (7) for large penetrations.

Wagner obtained equation (7) from a solution of the equation

$$\frac{p}{\rho}=-\frac{\partial\phi}{\partial t}-\frac{1}{2}\left(\frac{\partial\phi}{\partial x}\right)^2 \tag{8}$$

where

ϕ velocity potential in plane of flat plate $(-V\sqrt{x^2-x_p^2})$

Equation (8) is incomplete because a term representing the dynamic head of the free stream is lacking. The force increase obtained when equation (8) is corrected is, for conventional angles of dead rise, of the order of 10 percent.

The validity of the assumed velocity potential is somewhat uncertain. Comparison of solutions of equations (6) and (7) with experiment has shown that the principal factors are approximated but the experimental data have been complicated by seaway and other factors which have not permitted adequate evaluation.

Force equations.—Except for the following differences, Wagner's force equation is the same as that advanced by von Kármán:

(1) The new method of obtaining the virtual mass is incorporated.
(2) The velocity used in the momentum equation is defined differently.
(3) The equation is written as an integral for a nonrectangular pressure area.
(4) Reduction of the seaplane mass for the case of eccentric impact is contemplated.

The force equation given by Wagner (references 6 and 7) is:

$$F=\frac{\pi\rho V_{e_0}^2}{\left(1+\frac{m_w}{m_\tau}\right)^3}\int^l\frac{x\,dl}{u} \tag{9}$$

Wagner limited this equation to angles of dead rise less than 30°. Without giving theoretical justification Wagner recommended that the equation be multiplied by the following factor if the angle of dead rise is less than 10°:

$$1-\frac{\beta}{\pi}-0.15\frac{u}{\pi}-\frac{u}{\pi}\log\frac{1}{u} \tag{10}$$

where

β angle of slope of hull bottom at edge of impact area, radians

If the float is a fluted prism and is at zero trim, u is determined by x and is independent of l. For a particular combination of u and x, use of an increased value of l results in an increase in impact area but a decrease in velocity because the virtual mass is greater. By partial differentiation of the force equation with respect to l the force for a particular value of x (and u) can be shown to be a maximum when l is such that

$$\frac{m_w}{m}=\frac{1}{2} \tag{11}$$

Wagner derived this relationship and substituted it in equation (9) to obtain the following equation

$$F_{max_x}=\frac{0.3V_{e_0}^2m_r}{ux} \tag{12}$$

where

F_{max_x} maximum value of force that can occur for a particular value of x regardless of the impact length

The procedure for using equation (12) is to determine first the value of x for which $\frac{m_w}{m}=\frac{1}{2}$ when the length of the impact area is equal to the length of the forebody of the seaplane. For smaller values of x the critical length is greater than the length of the float and therefore equation (12) is not valid. For larger values of x the critical lengths will be less than the length of the float and the statistical variation of the length of the impact area in seaway is assumed to permit the critical length and maximum force for each of the larger values of x to be attained during the life of the float. Wagner states that equation (12) is to be solved by means of trial-and-error substitution of these larger values of x in combination with corresponding values of u; thus the value of x is determined for which a maximum value of the maximum forces within the range of the formula exists.

If u in equation (12) is considered to be a constant, as for the case of a triangular prismatic float, it is obvious that the equation will give maximum force when a minimum value of x is substituted. By substituting the minimum value of x to which this equation was limited and substituting the value of u for a triangular prismatic float, Wagner obtained the following equation for the maximum force on such a float:

$$F_{max}=\frac{0.835V_{e_0}^2\sqrt{\rho l_{max}m_r}}{\beta} \tag{13}$$

where

F_{max} maximum hydrodynamic force

l_{max} length of the forebody of the float

It should be remembered that equations (12) and (13) are based on a relationship between x and l which was so derived that the force calculated for a particular value of x is greater than it would have been if l had been either greater or smaller. The maximum force during the impact time history of a triangular prismatic float, however, will occur at a value of x less than that to which equation (13) must be limited, that is, at a value of x for which the force would be greater if the float were longer. Solution of this problem (reference 8) has shown that equation (13) should be derived from the relationship

$$\frac{m_w}{m}=\frac{1}{5} \tag{14}$$

rather than from

$$\frac{m_w}{m}=\frac{1}{2}$$

The effect of such correction is to increase the calculated maximum force for the triangular prismatic float by 24 percent.

Wagner (reference 6) worked hypothetical examples in which his equations gave values of the proper order, but he did not correlate the equations with any experimental data.

Improved solution for the flow beneath an immersing triangular prism.—By means of an iteration process, the details of which are not given, Wagner (reference 7) made a rather exact solution for the flow beneath an immersing triangular prism with an angle of dead rise of 18°. This solution involved only one flow pattern, since similar but enlarged flow patterns were assumed to exist at all times. This assumption is reasonable since the previous definitions of the virtual mass for the case of the immersing triangular prism had been on that basis.

Rather than make separate calculations for other angles of dead rise, Wagner estimated the effect of angle of dead rise by writing the equation of an arbitrary curve that passes through the calculated point for an angle of dead rise of 18° and that asymptotically approaches zero force at an angle of dead rise of 90° and infinite force at an angle of dead rise of 0°. The force equation written by Wagner was only for constant-velocity immersion, and gave for vertical penetration

$$F=\pi\left(\frac{\pi}{2\beta}-1\right)^2\rho V_v^2yl \tag{15}$$

This equation was used by Sydow to evaluate the virtual mass, which was then applied in formulas for variable-velocity impact. This work is discussed in a subsequent section of the present paper.

MEWES

Mewes wrote Wagner's equations in terms of acceleration rather than force (reference 9).

The equation for curved bottoms as written by Mewes was limited to mass loadings high enough to cause peak force to occur at maximum float width. The form coefficient u, which Wagner determined by an integration process for each float form, was approximated by Mewes in an expression that contains the angle of dead rise at the keel, the angle of dead rise at the chine, and the distance between the side of the float and the point of intersection of tangent lines to the bottom surface at the keel and the chine. He also presented an approximation to Wagner's correction factor for finite angle of dead rise (equation (10)).

Mewes' equation for F_{max} for the triangular prismatic float is not obtained directly from Wagner's but it may be obtained by incorporating the correction of equation (13), which was previously discussed.

Mewes gives an equation for the flat-bottom float, which apparently was obtained by substitution of values for the structural elasticity in Pabst's equation.

TAUB

Taub's study (reference 10) did not introduce new theoretical concepts. Rather, it used Wagner's theory to predict the effect of design trends on design loads.

SCHMIEDEN

Schmieden's analysis (reference 11) assumed that the impact area at different stages of the impact process consists of similar ellipses and that the flow action is of the type specified by Wagner. In this way he obtained an equation that, because of its assumed relationship between x and l, took into account growth of virtual mass due to both growth of width and growth of length of the wetted area. Although this analysis was carefully developed, the simplifying assumptions with regard to hull shape and manner of contact with seaway prevent this case from being of great practical interest.

WEINIG

Weinig used previous theory to indicate the effect of deformation of the hull cross section on the impact force (reference 12). The types of deflection he considered are too simple to represent the deformations of an actual seaplane hull but the magnitudes calculated indicate that the structural elasticity of the bottom proper of a V-bottom seaplane will have little effect on the resultant hydrodynamic force.

SYDOW

Source of virtual mass.—The momentum equation used in previous theory gives, in general terms, the following value for the hydrodynamic force:

$$F=\frac{d}{dt}(m_w V_u)$$
$$=m_w\frac{dV_u}{dt}+V_u\frac{dm_w}{dt} \qquad (16)$$

where

V_u velocity component substituted in momentum equation

For the constant-velocity case solved by Wagner in obtaining equation (15) the first term of equation (16) is 0. By equating the remaining term to equation (15) and integrating, Sydow (reference 8) obtained a value for m_w that he used to effect a variable-velocity solution.

The value of m_w obtained by Sydow is

$$m_w=\frac{\pi}{2}\left(\frac{\pi}{2\beta}-1\right)^2\rho l y^2 \qquad (17)$$

For the widely used angle of dead rise of 22½° this value of m_w is 1.56 times the virtual mass given by von Kármán and 0.56 times the virtual mass given by Wagner in his general solution. The theoretical basis of equation (17) is more sound than that of the previous definitions; the importance of the differences is shown by the fact that for equivalent instantaneous conditions these ratios of virtual mass can be regarded as force ratios.

Force equations.—By using the new formula for virtual mass, in von Kármán's equation, Sydow obtained the following force equation:

$$F=\frac{V_{v_0}{}^2\pi\rho l}{\left(1+\frac{m_w}{m}\right)^3}\left(\frac{\pi}{2\beta}-1\right)^2 y \qquad (18)$$

Equation (18) and previous impact equations are based on the assumption of a weightless mass. Sydow derived a second equation for a drop test, which included the momentum due to the weight acting for the time of the impact. This equation for a drop test will not be discussed herein because it is not readily comparable with the previous equations and because the previous equations are more representative of seaplane impact, for which the wing lift approximately balances the weight.

In his consideration of elasticity, Sydow included equations for the float both with weight and without weight. This treatment divided the total mass into a hull mass and an upper mass spring-connected to each other. Equations were written both for wide floats and for floats sufficiently narrow to cause maximum force on the sprung mass to occur after the chines are immersed. The equations for these cases will not be discussed because they are not necessary for an evaluation of the basic hydrodynamic theory.

Comparison with experiment.—An experimental check is obtained for vertical drop of hull masses (angles of dead rise of 0°, 10°, 20°, and 30°) spring-connected to an upper mass. The drop data are corrected for the effect of gravity by theoretically derived factors and compared with computed values for the case of wing lift. The spring constant is modified to fit the data. This modification is assumed to represent the effect of the elasticity of the bottom proper. Because of this modification and other approximations the exact accuracy of the theory is not established. The hydrodynamic theory used by Sydow, however, appears to give approximately correct results for vertical drop of a triangular prism at zero trim into smooth water.

KREPS

Kreps (reference 13) used Wagner's treatment of the virtual mass. The finite-keel factor recommended by Kreps differs, however, from that advanced by Wagner. The aspect-ratio factor determined experimentally by Pabst was incorporated in Kreps definition of the virtual mass.

One idea was advanced by Kreps that had not been included in the previous theory. This idea was the inclusion of a force term representing the resistance of the instantaneous flow pattern in addition to the force previously associated with the rate of change of the flow pattern. The new term made use of the familiar flat-plate air-drag coefficient of 1.28. In addition to the fact that this coefficient is of doubtful validity, the theoretical soundness of the entire term is questionable. This subject will be discussed further in a subsequent section of this report.

The equations proposed by Kreps were used by him to interpret drop-test data for floats having angles of dead rise up to 30°. This analysis was not a direct comparison of theoretical and experimental force values; instead, study of the total velocity dissipated during the impact part of the immersion was involved. Approximate agreement of the theory with drop-test data was indicated.

PROPOSED THEORY

Increase of flow momentum in fixed planes.—For a long narrow prismatic float in vertical drop at zero trim, the flow will occur primarily in transverse planes normal to the water surface. When the float in vertical drop is considered to have a trim angle with respect to the water surface, since fluid particles will be accelerated normal to the plating, the transverse planes must be considered normal to the keel rather than to the water surface. The flow in a plane for a particular depth and velocity of the immersing cross section is substantially the same as for zero trim. The difference in the depth of the keel at different points along the length sets up longitudinal pressure gradients and thereby changes the cross-plane-flow and end effects, but the effect of these longitudinal variations and of finite keel length will, as in previous treatments, be approximated by the aspect-ratio factor.

For oblique impact, the motion of the float can be analyzed in terms of the component motions parallel and perpendicular to the keel. If the float is prismatic and the nose projects beyond the water surface, the motion parallel to the keel does not cause any change of the float cross section in the transverse flow planes, which are regarded as fixed in space. This statement applies to the flow planes as long as they remain directly beneath the float; when the step passes through the flow plane, the intersected float cross section instantly vanishes and the plane becomes part of the wake of the float. Figure 1 shows the inclined float, the velocity components, and a normal flow plane.

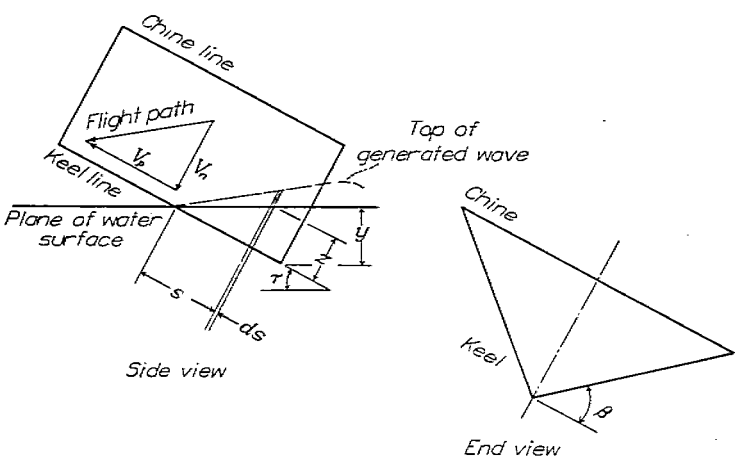

FIGURE 1.—Prismatic float at positive trim.

For the commonly assumed frictionless fluid, motion of the prismatic float perpendicular to the stationary flow planes will not affect the flow within the plane in any way. Thus the flow in the plane will be determined by the manner of growth of the intersected float form without regard to the fact that cross-plane velocity of the float causes different cross sections of the float to be in contact with the plane at different times. The flow process within a particular flow plane will properly begin when the keel at the water surface reaches that flow plane. Beginning at this instant the keel line of the float will penetrate the plane at velocity V_n until the plane slides off the rear of the float. The pressures registered in the plane at any instant should, for the considered float in an ideal fluid, be the same as if similar enlargement of the float section within the plane occurred in an equivalent V_n vertical penetration. For vertical penetration the flow plane is in contact with only one cross section of the float but for an oblique impact the flow plane is progressively in contact with all sections.

In the preceding discussion, if a float of uniform cross section had not been assumed the motion parallel to the keel would have been seen to cause an increase in the intersected float cross section in the flow planes beneath the float. If the longitudinal curvature is not too great, the flow will still occur primarily in planes normal to a base line parallel to the keel at the step. The primary effects of the combined motions normal and parallel to the keel will be approximately represented if the reactions in fixed flow planes normal to the keel at the step are computed on the basis of the absolute increase of the intersected float cross section in each plane as determined by the combined motions of the float.

The summation of the reactions of the individual flow planes being acted upon by the float must equal the total rate of change of the momentum of the fluid. Since $m_w V_n$ is defined as the momentum of the flow directly beneath the float (that flow which affects the acceleration derivative), the rate of change of the momentum of the flow directly beneath the float is $\frac{d}{dt}(m_w V_n)$. In order to obtain the total rate of change of the momentum of the fluid, however, the rate at which momentum is imparted to the downwash in connection with flow planes sliding off the step must be added. Where m_s is the virtual mass of the plane at the step as included in the determination of m_w, the rate of momentum passage to the downwash is equal to the momentum of this plane multiplied by the number of planes sliding off the step per unit time. Thus the complete equation is

$$F_n = \frac{d}{dt}(m_w V_n) + m_s V_n V_p \tag{19}$$

F_n hydrodynamic force in the V_n-direction
m_s virtual mass of flow plane at step (per unit distance in keel direction)
V_p velocity of the float parallel to keel (rate at which flow planes slide along keel and off step)

In a subsequent section of the present report, the same force equation is derived by integrating the force along the float. The solution is made for fixed trim; if the local penetration velocity and acceleration are treated as variables along the keel, however, variable-trim solutions can be obtained.

The variation along the keel of the instantaneous reaction of the individual flow planes determines the instantaneous lengthwise distribution of the load. Further, the pressure distribution in the transverse planes gives the pressure distribution over the bottom area. Previous impact theory concerning the pressure distribution in a flow plane is directly applicable to the proposed theory if the velocity and acceleration of the float cross section are defined by the theory proposed herein.

Comparison with previous theory.—Previous impact theory was based on the assumption that the momentum of the seaplane and virtual mass remains constant during the impact. Such an assumption requires that the second term of equation (19) be 0, but this term is 0 only when V_n is the resultant velocity (that is, $V_p=0$).

For the prismatic float with bow above the water surface (at positive trim), the velocity component of the float parallel to the keel does not cause change of the momentum in the normal flow planes and therefore is without force effect. This condition means that the effect on the instantaneous force of the rate of momentum passage to the downwash due to a velocity component parallel to the keel is balanced by the effect of this velocity component in causing (owing to its vertical component) less increase of the virtual mass. For this condition that the velocity component parallel to the keel does not affect the instantaneous force for a given draft and velocity, the previous theory would be justified in neglecting the velocity parallel to the keel if the force equation had been written in terms of the instantaneous velocity and draft. The error of the previous theory for this case lies in the fact that the total momentum of the seaplane and virtual mass was assumed to be constant (see equation (1)) and the momentum left behind in the downwash was thereby neglected.

With regard to penetration, the error in the previous theory is that $V_p \sin \tau$ was not subtracted from the penetration velocity that exists for V_n alone. Actually, this neglected term may cause the seaplane to be climbing at a time that V_n is of large magnitude in a downward direction. Consideration of this term leads to small penetrations and small forces for low flight-path angles, but the previous theory (for the normal range of trims, essentially a solution for vertical drop) always gives large penetrations and forces. This theory gives no values of the maximum penetration; it was explained that neglected buoyancy forces finally stopped the penetration of the float.

If the float is not prismatic, the instantaneous-force equation developed by the previous theory is correct only when V_n is the resultant velocity. This restriction is due to the fact that the velocity component parallel to the keel causes increase of the flow pattern in the flow planes beneath the float. As previously discussed, the momentum passed to the downwash is determined by the float cross section at the step without regard to such nonsimilarity of the forward cross sections as may have substantial effect on the virtual mass.

Since the previous impact theory did not disclose the inadequacies discussed, the proposed theory opens a new field for study and advancement.

For the planing float the first term of equation (19) is 0 and the hydrodynamic force is equal to the last term. When methods of the previous impact theory are used to define the flow in the plane at the step, this last term provides a theoretical V-bottom planing formula that is more advanced than previous planing theory based on an approximate flat plate and two-dimensional flow in longitudinal planes. Also, this last term permits the use of planing data to evaluate experimentally the momentum of the flow in the normal planes for a specific cross section, and the complete equation provides means whereby the results of such studies can be used for calculating transient (impact) and oscillatory motions of the float. Examples of such use of experimental planing data will be shown later in this text.

A later section of this report will correlate both the previous theory and the proposed theory with experimental data for oblique and vertical impact in order to show the inadequacy of the previous theory and prove the merit of the proposed theory.

Derivation of force equations.—A prismatic float at positive trim is shown in figure 1. A flow plane is shown in the side view. The depth of penetration of the float into this plane is represented by z in this figure. According to preceding interpretations the momentum of the flow in the plane element (fixed in space) can be represented, in the case of triangular float cross section and similar flow at different depths of immersion, by

$$Kz^2\, ds \frac{dz}{dt} \tag{20}$$

where

z penetration in the plane

ds thickness of plane

K theoretical coefficient; different values specified by different treatments, varies according to angle of dead rise

The force transmitted by this plane to the float can be obtained from the following equation

$$\begin{aligned} F_p &= \frac{d}{dt}\left(Kz^2\, ds \frac{dz}{dt}\right) \\ &= K\left[z^2 \frac{d^2z}{dt^2} + 2z\left(\frac{dz}{dt}\right)^2\right] ds \end{aligned} \tag{21}$$

where

F_p force (normal to keel) registered by individual flow plane

The total force can be obtained by summing the forces in the individual flow planes. Thus,

$$F_n = \int_{s=0}^{s=\frac{y}{\sin\tau}} K\left[z^2 \frac{d^2z}{dt^2} + 2z\left(\frac{dz}{dt}\right)^2\right] ds$$

When $s \tan \tau$ is substituted for z and, for fixed-trim impact, V_n is substituted for $\frac{dz}{dt}$, the following equation is obtained:

$$\begin{aligned} F_n &= \int_{s=0}^{=\frac{y}{\sin\tau}} K\left(s^2 \tan^2\tau \frac{dV_n}{dt} + 2s \tan \tau V_n^2\right) ds \\ &= \frac{Ky^3 \frac{dV_n}{dt}}{3 \sin \tau \cos^2 \tau} + \frac{Ky^2 V_n^2}{\sin \tau \cos \tau} \end{aligned} \tag{22}$$

The virtual mass is a fictitious mass that, if it is considered to move at velocity V_n, has the aggregate momentum of all the flow particles in all the flow planes directly beneath the float. This mass can be obtained by integrating equation (20) over the wetted length; the first term of equation (22),

however, represents $m_w \frac{dV_n}{dt}$ and, by inspection,

$$m_w = \frac{Ky^3}{3 \sin \tau \cos^2 \tau} \tag{23}$$

If the momentum of the float and virtual mass is to remain constant as specified by the previous impact theory, the last term of equation (22) must equal $V_n \frac{dm_w}{dt}$. This equality holds, however, only when V_n is the resultant velocity. The following algebraic equivalent of equation (22) may be written

$$F_n = \frac{Ky^3 \frac{dV_n}{dt}}{3 \sin \tau \cos^2 \tau} + \frac{Ky^2 \dot{y} V_n}{\sin \tau \cos^2 \tau} + \frac{Ky^2 V_p V_n}{\cos^2 \tau} \tag{24}$$

where

$\dot{y}$ velocity normal to water surface (V_s)

V_p velocity of float parallel to keel ($-\dot{y} \sin \tau + V_h \cos \tau$)

The respective terms of equation (24) represent $m_w \frac{dV_n}{dt}$, $V_n \frac{dm_w}{dt}$, and the rate at which momentum is imparted to the downwash in connection with the planing action.

The momentum of the flow in the flow plane at the step (equation (20)) is $Ky^2 V_n / \cos^2 \tau$. The velocity V_p is a measure of the rate at which these planes slide off the step. The product of these terms is equal to the last term of equation (24), which is in agreement with the theory for the momentum passed to the downwash.

If m_w and the flow in the plane at the step are determined, equation (24) can be obtained through direct substitution of these quantities in equation (19). The solution presented was chosen in order to explain the theory better.

Momentum of the flow in the plane.—As indicated in a previous section of this report, the most advanced treatment of the flow in a plane being penetrated by a nontriangular prism (Wagner) is of questionable accuracy. For the case of a float that is both nonprismatic and of nonuniform cross section, the increase of the float cross section in the stationary planes may correspond to an equivalent vertical penetration during which the float changes shape. Since the previous theory has not treated this case, the effect of the previous changes of flow pattern on the flow for a given cross section is questionable. Although this effect is not believed to be important for conventional problems (as will be indicated in a comparison of theory with experiment), importance would limit the proposed theory for oblique impact to floats of uniform cross section along the keel; curvature along the keel for this case of uniform cross section would alter only the rate of penetration of the given cross section into the flow planes passing beneath the float and could be considered.

Although the proposed theory offers new ways to handle the more complicated cases, the present report will be restricted to obtaining solutions for a triangular prism and comparing these solutions with experimental data.

Analysis of the previous theory indicated that the virtual mass used by Sydow (equation (17)) represents the best theoretical solution of the flow in normal planes for the case of the triangular prism. Since equation (17) was derived from equation (15), this definition of the virtual mass is for two-dimensional flow. Probably the best way to correct for end loss, considering relative simplicity and probable accuracy for conventional angles of dead rise and trim, is by use of Pabst's empirical aspect-ratio factor

$$1 - \frac{1}{2A} \tag{25}$$

For bodies of low aspect ratio with the two-dimensional flow considered to occur in transverse planes, the effective aspect ratio to be used in this factor is the length to mean beam ratio. Based on the area beneath the plane of the water surface for a triangular prism at positive trim, this ratio is

$$\frac{\tan \beta}{\tan \tau}$$

The empirical factor was determined as an over-all effect, but the same total force will be obtained if it is applied to the planes individually. Introduction of the factor and the effective aspect ratio into equation (17) gives

$$m_p = \frac{\pi}{2} \left(\frac{\pi}{2\beta} - 1 \right)^2 \rho z^2 ds \left(1 - \frac{\tan \tau}{2 \tan \beta} \right) \tag{26}$$

where

m_p virtual mass of the flow in the plane

The aspect-ratio factor (expression (25)) was obtained in submerged vibration tests and is somewhat questionable. As previously discussed, the detailed derivation of the two-dimensional solution (equation (17)) was not given and how far the iteration process was carried and what approximations were made are not known. A large amount of planing data therefore was analyzed to determine the adequacy of equation (26). For this analysis equation (19) was used in which, for planing, the first term is 0, $V_p = V \cos \tau$, $V_n = V \sin \tau$, and $F_n \cos \tau = W$. The following equation results:

$$W = m_s V^2 \sin \tau \cos^2 \tau \tag{27}$$

From equation (27)

$$m_s = \frac{W}{V^2 \sin \tau \cos^2 \tau} \tag{28}$$

Substitution of experimental values of W, V, and τ in equation (28) gave experimental values of m_s. Substitution in equation (26) of experimental values of β, τ, and the value of z at the step $y/\cos \tau$ gave corresponding theoretical values of m_s. Comparison of these values indicated that a factor of 0.82 should be inserted in equation (26) to give the following equation:

$$m_p = 0.82 \left(\frac{\pi}{2\beta} - 1 \right)^2 \pi \frac{\rho}{2} z^2 ds \left(1 - \frac{\tan \tau}{2 \tan \beta} \right) \tag{29}$$

Because of the aspect-ratio factor, equation (29) does not hold for small angles of dead rise. The study indicated that the equation will be satisfactory for angles of dead rise between 15° and 30° but begins to be unduly excessive for angles smaller than 10°. A variation of $\cot^2\beta$ with angle of dead rise may be better than the variation of $\left(\frac{\pi}{2\beta}-1\right)^2$ with angle of dead rise, but in absence of clear requirement for change the variation used by Wagner in equation (15) was retained. As previously discussed, this variation appeared to result from arbitrary fairing through a force solution for 18° angle of dead rise, infinite force at 90° angle of dead rise, and zero force at 0° angle of dead rise. The $\cot^2\beta$ variation used prior to that time could have been faired by Wagner through these points; thus it seems that Wagner probably had some reason for changing the variation

Equation (22) was derived on the basis that $m_p=Kz^2\,ds$. This equation will be corrected for aspect ratio and for variation of angle of dead rise if K is replaced by equation (29) divided by $z^2\,ds$, which results in

$$F_n=0.82\frac{\rho}{2}\left(\frac{\pi}{2\beta}-1\right)^2\left(1-\frac{\tan\tau}{2\tan\beta}\right)\frac{\pi y^2}{\sin\tau\cos\tau}\left(\frac{y\frac{dV_n}{dt}}{3\cos\tau}+V_n^2\right) \tag{30}$$

CORRELATION OF THEORY WITH EXPERIMENT

For the planing float $F_n=\frac{W}{\cos\tau}$, $\frac{dV_n}{dt}=0$, $V_n=V_h\sin\tau$, and equation (30) takes the form

$$W=0.82\frac{\rho}{2}\pi y^2V^2\sin\tau\left(1-\frac{\tan\tau}{2\tan\beta}\right)\left(\frac{\pi}{2\beta}-1\right)^2 \tag{31}$$

from which it can be determined that

$$y=\frac{1}{V\left(\frac{\pi}{2\beta}-1\right)}\left[\frac{W}{\frac{\rho}{2}\left(1-\frac{\tan\tau}{2\tan\beta}\right)0.82\pi\sin\tau}\right]^{1/2} \tag{32}$$

Figure 2 shows comparisons of this equation with experimental data (reference 14) for a V-bottom float. Good agreement exists over the range of the experimental data. Study of the experimental data indicated that its scatter shows mainly the inaccuracies in the measurements of draft and that agreement between measured and theoretical data would generally be very good if the values of draft were taken from faired curves of draft against velocity.

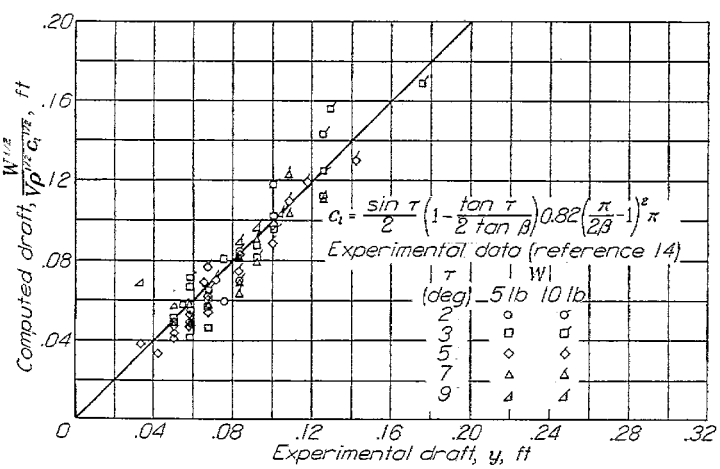

FIGURE 2.—Variation of computed draft with experimental draft. $\beta=22.5°$. (C_l is planing lift coefficient.)

The solid-line curves in figure 3, which represent application of the proposed theory to oblique impacts, also show good agreement of the theory with experiment. These curves and data were included in reference 15.

As discussed in the preceding analysis, reference 13 contains a proposal that a force term representing the resistance of the steady-flow pattern be added to the force in the planes due to rate of change of the flow pattern. Although reference 13 suggests that the familiar flat-plate air-drag coefficient of 1.28 be used, perhaps a better approximation can be obtained by use of the coefficients developed by Bobyleff (reference 16) for a stream impinging on a bent lamina. For the more-or-less mean angle of dead rise of 22½° this coefficient is 0.79; the variation with angle of dead rise is small for conventional ranges of angle of dead rise.

If a steady-flow term based on the coefficient of 0.79 is included in the force equation, a coefficient of 0.75 instead of 0.82 must be introduced into equation (29) so that the results of the final solution will be subjected to minimum change. The equations given in reference 15, which give the solid-line curves of figure 3, were based on such modification of equation (22) and represent, within 1 or 2 percent, solutions of equation (22). In order to check the equations of reference 15, $V_v\sin\tau$ in the definition of V_p should be eliminated on the basis that for seaplane impact it is negligible as compared with $V_h\cos\tau$.

Subsequent theoretical study has indicated that the steady-flow term represents the force in the plane when the chines are immersed but that when the chines are not immersed this force is included in the term representing increase of the virtual mass of the flow in the plane and should not be added as suggested in reference 13. For this reason the steady-flow term was not included in equation (19) and subsequent equations.

The effect of the empirical correction factor 0.82 to Sydow's virtual mass is to increase the calculated draft for planing 9 percent and decrease the calculated maximum force for a severe impact 6 percent. Without this correction fair agreement thus would exist between theoretical and experimental results.

The long-short-dash curves in figure 3 were derived on the basis of Wagner's formula (for two-dimensional flow) reduced according to Pabst's aspect-ratio factor. Even with this reduction the calculated forces are excessive, particularly for the steeper flight paths (relative to the wave surface) that represent severe impacts and for the higher trims (relative to the wave surface) at which modern seaplanes operate in open seaway in order to obtain maximum wing lift and to reduce the landing speed.

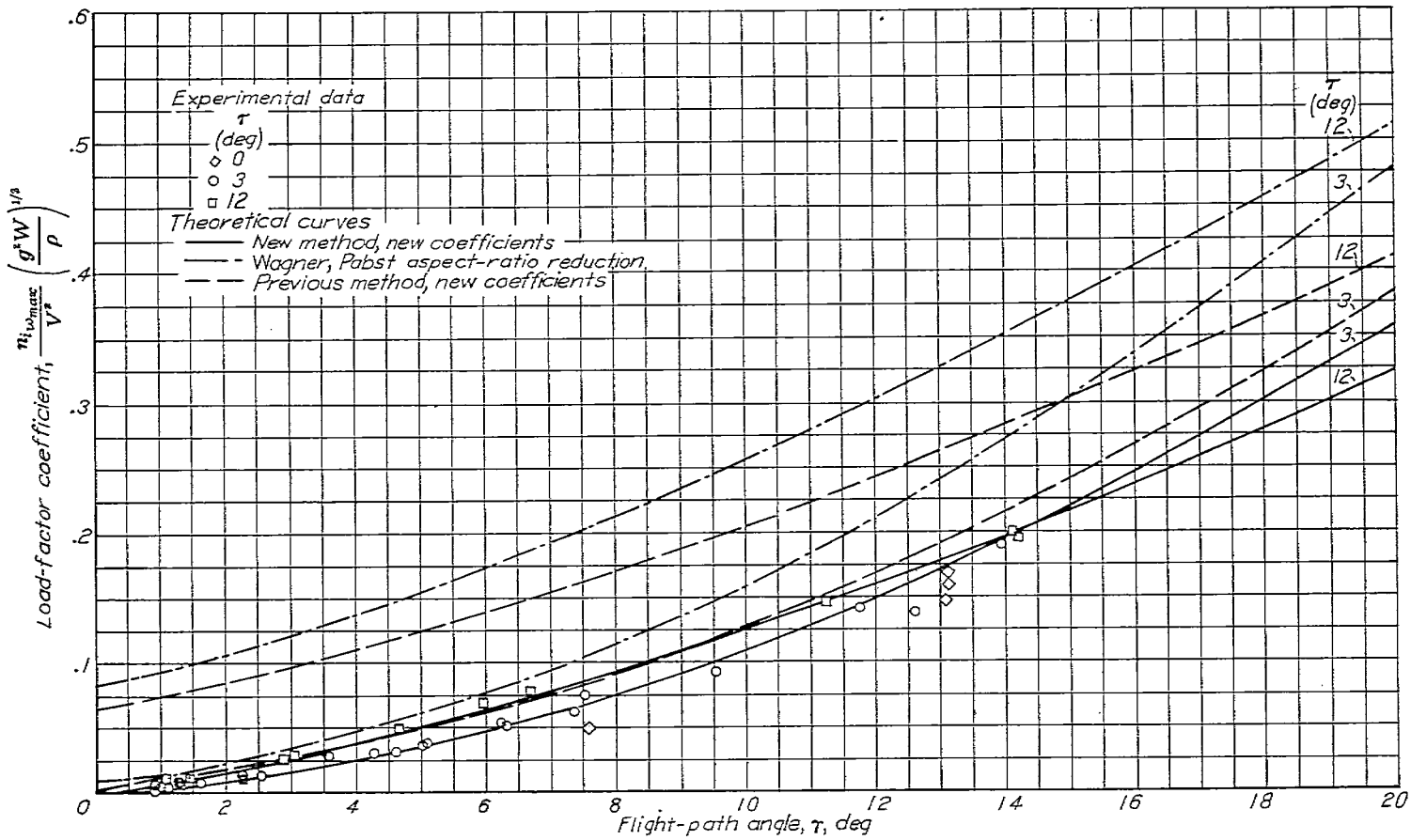

FIGURE 3.—Variation of load-factor coefficient with flight-path angle for a float having an angle of dead rise of 22½°. (Solid-line curves from reference 15.)

The long-dash curves in figure 3 are based on the momentum equation as used by Wagner and others, but with the definition of the virtual mass of the flow in the normal planes replaced by the values used in the equations of the theory proposed herein. Comparison of these curves with the curves of the proposed theory shows that the method of the previous theory still results in forces that are too large. Differences between the curves, particularly at higher trims, justify use of the newer equation.

The offsets of the float with which the experimental data of figure 3 were obtained are given in reference 15. The float was a model of a four-engine flying boat except that the afterbody and chine flare were removed. Agreement of the data with solutions of the proposed theory for the case of a prismatic float indicates that pulled-up bow has little effect on the resultant force.

Although, as previously indicated, the proposed theory can be used for consideration of zero trim if the bow shape is not too blunt, solutions for this case are complicated and are limited by the fact that they must be made for arbitrary bow shape. Solution for zero trim therefore is not given in the present paper. In figure 3, however, the experimental accelerations for zero trim can be seen to be 10 to 20 percent less than the experimental accelerations for 3° trim.

The experimental data in figure 4 represent vertical drop ($\gamma=90°$) of the float, with which the data of figure 3 were obtained, with the afterbody added. The drops were made at 3° trim, and the resultant (vertical) velocity therefore was not quite normal to the keel. Since solution of equation (30) is much easier when the velocity is normal to the keel, the theoretical curve in figure 4 was obtained by solving equation (30) for a flight-path angle of 87°. The difference between 87° and 90° flight-path angle is not important. Agreement with experiment is shown.

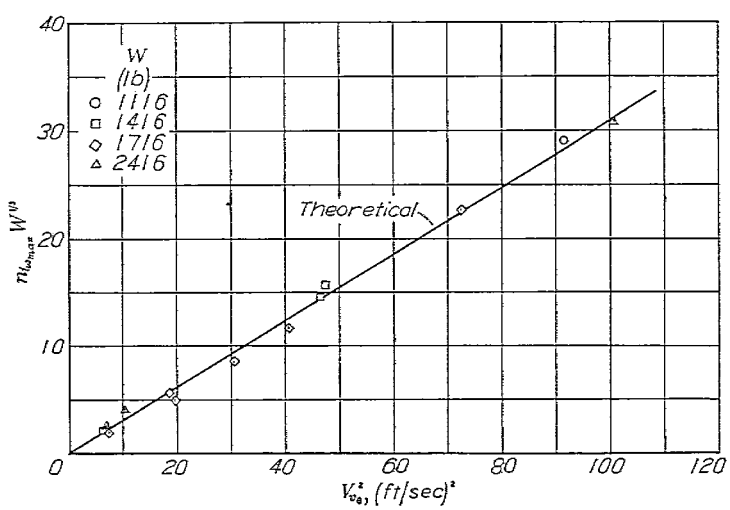

FIGURE 4.—Variation of load-factor coefficient for vertical drop. Test points from unpublished data. f at step, 22½°; τ, 3°.

The foregoing correlations are for the conditions of fixed trim and smooth water. The theoretical curves will give approximate representation of free-to-trim impact if used on the basis of the trim when the step contacts the water. The case of the seaplane landing into a swell will be approximated if the trim and the flight-path angle are defined relative to the inclined surface of the swell rather than relative to the horizontal.

Good agreement of the theory with experiment is indicated but if the velocity is small enough the theory will be inadequate. One reason for this inadequacy is that the dynamic force will be reduced so much that the buoyancy force, which has been assumed negligible, will become important. A second reason is that the effect of gravity on the flow pattern, particularly with regard to the generated wave, may be substantial.

Pertinent data that affect the importance of the gravity forces are not given in figures 1 to 4, which are based on the dynamic forces alone. The range of the data, however, is sufficient to determine that the gravity effect is negligible in the landing impact of all seaplanes that have been flown. Some data pertaining to this subject were included in reference 15.

For very low velocities the virtual mass might be expected to approach the value specified by von Kármán. Such transition would reduce the virtual mass used in the computations of the present paper about 20 percent. The manner of this reduction is of interest only in connection with slow planing, for which it can be readily determined by empirical means.

CONCLUSIONS

The analysis of previous impact theory, modifications of this theory, and comparison with experiment lead to the following conclusions:

1. The assumption of previous treatments of impact theory that the total momentum of the float and virtual mass is constant is applicable when the resultant velocity of the float is normal to the keel but is not applicable for the usual oblique impact, in which the velocity component parallel to the keel causes momentum to be lost to the downwash behind the float.

2. Comparison of previous theory with recent, more accurate data for oblique impact shows that this theory greatly overestimates the impact force. Use of newer coefficients in the previous theory only slightly reduces the forces. Disagreement with the data is larger at the higher trims and lower flight-path angles.

3. A modified theory has been developed that takes into account the loss of momentum to the downwash. Good agreement has been obtained with data for vertical drop, oblique impact, and planing.

Langley Memorial Aeronautical Laboratory,
National Advisory Committee for Aeronautics,
Langley Field, Va., *August 20, 1945.*

REFERENCES

1. von Kármán, Th.: The Impact on Seaplane Floats during Landing. NACA TN No. 321, 1929.
2. Thompson, F. L.: Water-Pressure Distribution on a Seaplane Float. NACA Rep. No. 290, 1928.
3. Pabst, Wilhelm: Theory of the Landing Impact of Seaplanes. NACA TM No. 580, 1930.
4. Pabst, Wilhelm: Landing Impact of Seaplanes. NACA TM No. 624, 1931.
5. Bottomley, G. H.: The Impact of a Model Seaplane Float on Water. Eighteenth Series. R. & M. No. 583, British A. C. A., 1919.
6. Wagner, Herbert: Landing of Seaplanes. NACA TM No. 622, 1931.
7. Wagner, Herbert: Über Stoss- und Gleitvorgänge an der Oberfläche von Flüssigkeiten. Z. f. a. M. M., Bd. 12, Heft 4, Aug. 1932, pp. 193–215.
8. Sydow, J.: Über den Einfluss von Federung und Kielung auf den Landestoss. Jahrb. 1938 der deutschen Luftfahrtforschung, R. Oldenbourg (Munich), pp. I 329–I 338. (Available as British Air Ministry Translation No. 861.)
9. Mewes, E.: Die Stosskräfte an Seeflugzeugen bei Starts und Landungen. Vereinigung für Luftfahrtforschung Jahrb. 1935, Berlin, R. Oldenbourg (Munich), 1935.
10. Taub, Josef: Load Assumptions for the Landing Impact of Seaplanes. NACA TM No. 643, 1931.
11. Schmieden, C.: Über den Landestoss von Flugzeugschwimmern. Ing.-Archiv., Bd. X, Heft 1, Feb. 1939, pp. 1–13.
12. Weinig, F.: Impact of a Vee-Type Seaplane on Water with Reference to Elasticity. NACA TM No. 810, 1936.
13. Kreps, R. L.: Experimental Investigation of Impact in Landing on Water. NACA TM No. 1046, 1943.
14. Parkinson, John B.: A Complete Tank Test of a Model of a Flying-Boat Hull—N. A. C. A. Model No. 11-A. NACA TN No. 470, 1933.
15. Mayo, Wilbur L.: Theoretical and Experimental Dynamic Loads for a Prismatic Float Having an Angle of Dead Rise of 22½°. NACA RB No. L5F15, 1945.
16. Lamb, Horace: Hydrodynamics. Sixth ed., Cambridge Univ. Press, 1932.