# REPORT No. 813

## CORRELATION OF EXHAUST-VALVE TEMPERATURES WITH ENGINE OPERATING CONDITIONS AND VALVE DESIGN IN AN AIR-COOLED CYLINDER

By M. A. Zipkin and J. C. Sanders


### SUMMARY

*A semiempirical equation correlating exhaust-valve temperatures with engine operating conditions and exhaust-valve design has been developed. The correlation is based on the theory correlating engine and cooling variables developed in a previous NACA report. In addition to the parameters ordinarily used in the correlating equation, a term is included in the equation that is a measure of the resistance of the complex heat-flow paths between the crown of the exhaust valve and a point on the outside surface of the cylinder head. A means for comparing exhaust valves of different designs with respect to cooling is consequently provided. The necessary empirical constants included in the equation were determined from engine investigations of a large air-cooled cylinder. Tests of several valve designs showed that the calculated and experimentally determined exhaust-valve temperatures were in good agreement.*


### INTRODUCTION

A number of investigations have been conducted on the operating temperature of exhaust valves. As early as 1923, the operating temperatures of a hollow-stem exhaust valve without internal coolant were measured by means of a thermocouple (reference 1). It was found that the operating temperature of the exhaust valve in a cylinder of low specific output (less than 0.25 hp/cu in.) varied between 600° and 750° C. (1112° and 1382° F) depending mainly on fuel-air ratio, cylinder cooling, and spark timing. It is also stated in reference 1 that under abnormal conditions, such as preignition, the valve temperature might exceed 800° C (1472° F). Subsequent developments in valve and cylinder design have permitted much higher specific outputs than 0.25 horsepower per cubic inch with approximately the same range of exhaust-valve temperatures. The operating temperature and the effects of several operating variables on the temperature of a sodium-cooled exhaust valve in current use are discussed in reference 2 and an indication of the extent to which valve temperatures can be influenced by valve design is reported in reference 3. A review of available data on exhaust-valve temperatures, however, has revealed no attempt to develop a mathematical expression relating design and operating variables to exhaust-valve temperature.

Pinkel (reference 4) has shown that average head and barrel temperatures can be mathematically correlated with engine and cooling variables. Pinkel's equation is modified in reference 5 to correlate the temperatures of specific points on the cylinder head, and with the selection of a suitable effective gas temperature, it could be used to correlate exhaust-valve temperatures. In order to evaluate the cooling characteristics of different exhaust-valve and port designs, however, a more convenient and exact means of correlating exhaust-valve temperatures is needed. An analysis similar to that developed by Pinkel but limited to that portion of the cylinder head that conducts heat from the valve crown to the cooling air is presented herein to derive a semiempirical equation correlating exhaust-valve temperature with engine operating conditions and valve design. A term is included in the equation that accounts for the resistance to heat flow presented by complex heat-flow paths between the exhaust-valve crown and the cooling air. This term, called the thermal-resistance factor, provides a ready means for evaluating changes in exhaust-valve and port design. Although the thermal-resistance factor applies to both the exhaust valve and port, only changes in valve design are considered herein. The analysis presented can also be applied to the spark-plug electrode or any other hot spot within the cylinder provided that a local mean effective gas temperature is used. Local mean effective gas temperature as used here applies only to the region of the combustion chamber being considered rather than to the entire cylinder head or barrel as defined in reference 4.

After the necessary engine investigations have been conducted to determine the cylinder constants, the operating temperatures of exhaust valves of different designs can be predicted by determining the valve temperature under only one set of operating conditions. In general practice, exhaust-valve operating temperatures are usually determined by hardness measurements of a heat-treatable valve. This method limits temperature measurement to only one engine operating condition, which, however, would provide sufficient data for the correlation presented in this report.

Engine investigations to determine the necessary experimental constants for the application of the correlating equation to a conventional air-cooled cylinder were conducted during 1944 at the NACA Cleveland laboratory.

## SYMBOLS

The following symbols are used in the development of the equation correlating exhaust-valve temperatures with engine operating conditions and valve design:

| | |
|---|---|
| $C$ | thermal-resistance factor, the value of which is dependent upon design of exhaust valve and port |
| $H$ | heat transferred to or from cylinder wall or exhaust-valve crown, (Btu/hr) |
| $I$ | indicated horsepower |
| $K, K_1, K_2$, $m, n$ | constants for given cylinder |
| $\Delta P$ | cooling-air pressure drop across cylinder, (in. water) |
| $q$ | over-all coefficient of heat transfer from gas to wall or from gas to exhaust-valve crown, (Btu/(hr) (°F)) |
| $r_f$ | thermal resistance to heat flow through fins to cooling air (fig. 1), ((°F) (hr)/Btu) |
| $r_g$ | thermal resistance to heat flow through valve guide and cylinder head (fig. 1), ((°F) (hr)/Btu) |
| $r_o$ | over-all thermal resistance to heat flow from inside surface of cylinder to cooling air or from valve crown to cooling air, ((°F) (hr)/Btu) |
| $r_s$ | thermal resistance to heat flow through valve seat and cylinder head (fig. 1), ((°F) (hr)/Btu) |
| $r_v$ | thermal resistance to heat flow through valve parallel to axis of valve (fig. 1), ((°F) (hr)/Btu) |
| $r_w$ | thermal resistance to heat flow through cylinder wall or through valve crown and valve face (fig. 1) ((°F)(hr)/Btu) |
| $r_x$ | equivalent thermal resistance to heat flow between valve crown and external fins of cylinder, ((° F) (hr)/Btu) |
| $T_a$ | cooling-air temperature, (° F) |
| $T_g$ | local mean effective gas temperature (fig. 1), (° F) |
| $T_o$ | temperature of outside surface of cylinder head nearest valve guide (fig. 1), (° F) |
| $T_v$ | temperature of exhaust-valve crown (fig. 1), (° F) |
| $T_w$ | temperature of cylinder wall, (° F) |
| $\sigma$ | ratio of cooling-air density at inlet of cylinder cowling to density of NACA standard air |

## DERIVATION OF CORRELATING EQUATION

The problem of relating the exhaust-v[illegible] temperature to the numerous operating conditions an[illegible] design features of the cylinder is most easily solved by computing a balance of the heat transferred to and from the valve. The heat transferred to the valve is influenced by only the film coefficient of heat transfer between the working fluid and the valve and the temperature difference between them. Heat transferred away from the valve crown is a function of only the thermal resistance between the crown of the valve and the cooling air at the exterior of the cylinder and the temperature difference between the valve crown and cooling air. These parameters can be readily demonstrated in the simple case of a point on the inner wall of the cylinder.

When a heat balance is set up for a point on the inside surface of the wall, the heat transferred to the wall is

$$H=q(T_g-T_w) \tag{1}$$

Heat transferred away from the wall is

$$H=\frac{1}{r_o}(T_w-T_a) \tag{2}$$

where $r_o$ is the over-all thermal resistance from the inside surface of the cylinder to the cooling air and is equal to $r_w+r_f$, the sum of the thermal resistances through the cylinder wall and the cooling fins. Elimination of $H$ in equations (1) and (2) gives the following equation relating the temperature of a point on the cylinder wall to the surrounding thermal conditions:

$$\frac{T_w-T_a}{T_g-T_w}=qr_o \tag{3}$$

It is now evident that most operating and design conditions may be related to $T_w$ through analysis of their effects on $T_g$, $q$, and $r_o$.

If a heat balance for the exhaust-valve crown similar to that for the point on the inside surface of the cylinder wall is set up, the following equation is obtained:

$$\frac{T_v-T_a}{T_g-T_v}=qr_o \tag{4}$$

where now $T_g$ is the local mean effective gas temperature with respect to the valve, $q$ is the coefficient of heat transfer between the working fluid and the valve crown and $r_o$ is the over-all thermal resistance from the valve crown to the cooling air. The solution is complete when $T_g$, $q$, and $r_o$ are related to engine operating conditions and valve design.

The parameter $r_o$ can best be evaluated by expressing it in terms of its component parts. As can be seen in figure 1, heat is removed from the valve crown through two parallel paths: one through the valve stem, valve guide, and cylinder head and the other through the valve face, valve seat, and cylinder head. The total thermal resistance of the path through the valve stem is $r_s+r_g+r_f$ and the total resistance of the path through the valve seat is $r_w+r_s+r_f$. The effective thermal resistance of the two paths in parallel is given by the relation

$$\frac{1}{r_o}=\frac{1}{r_s+r_g+r_f}+\frac{1}{r_w+r_s+r_f} \tag{5}$$

A more useful approximation for $r_o$ may be obtained, however, by introducing an equivalent thermal resistance for the two parallel heat-flow paths between the valve crown and the external fins. Then

$$r_x=\frac{1}{r_v+r_g}+\frac{1}{r_w+r_s}$$

and

$$r_o\cong r_x+r \tag{6}$$

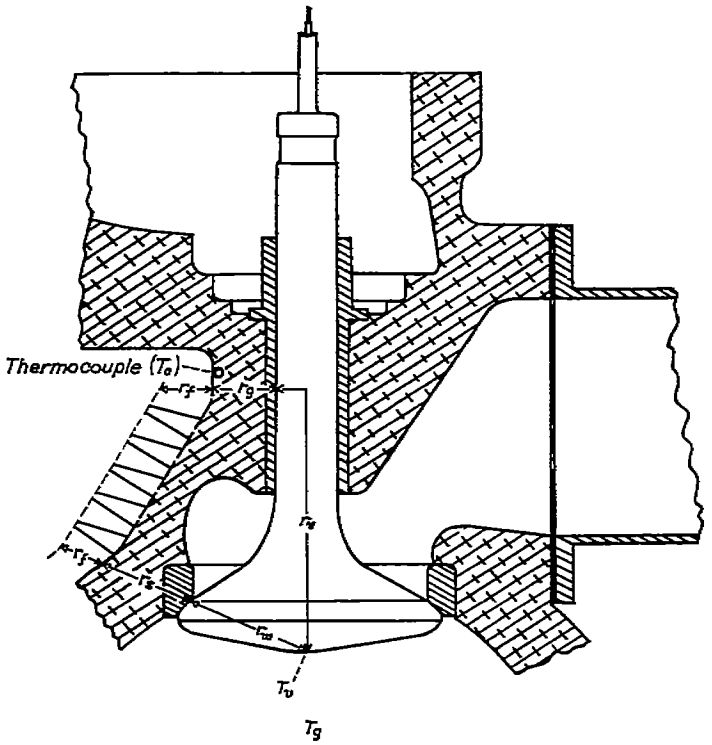


FIGURE 1.—Thermal resistances between crown of exhaust valve and exterior of cylinder head. Temperature reading $T_c$ on outside surface of cylinder head at point nearest exhaust-valve guide.

It should be noted that in addition to the heat added to the valve crown, heat is also transferred to the under side of the valve and the valve-guide boss from the hot exhaust gases flowing through the exhaust port. This additional heat flow together with the additional heat-flow paths would have to be considered in an exact analysis, but their consideration in a semiempirical analysis as presented herein would make the final equation too complex for practical use. It is therefore assumed that the effects of this additional heat flow on exhaust-valve temperature can be treated as part of the thermal-resistance factor of the valve and port, which is derived later in this analysis.

The coefficient of heat transfer from the combustion gases to an exposed surface in the combustion chamber has been shown by Pinkel (reference 4) to be approximately an exponential function of the engine power as represented by the equation

$$q=K_1I^n \tag{7}$$

It is also shown in reference 4 that the thermal resistance of the flow path to the cooling air may be represented by the relation

$$\frac{1}{r_f}=K_2(\sigma\Delta P)^m \tag{8}$$

When these values are substituted in equation (4), the following equation is obtained:

$$\frac{T_v-T_a}{T_g-T_v}=K_1I^n\left[r_x+\frac{1}{K_2(\sigma\Delta P)^m}\right]=\frac{K_1}{K_2}I^n\left[K_2r_x+\frac{1}{(\sigma\Delta P)^m}\right]$$

Let

$$K_2r_x=C$$

and

$$\frac{K_1}{K_2}=K$$

Then

$$\frac{T_v-T_a}{T_g-T_v}=KI^n\left[\frac{1}{(\sigma\Delta P)^m}+C\right] \tag{9}$$

where $C$ is a thermal-resistance factor, the value of which is dependent upon the design of the exhaust valve and port.

Equation (9) may be used to relate valve temperature to most engine operating conditions and valve-design features. Of the three parameters $T_g$, $q$, and $r_c$ necessary to correlate operating conditions and valve design with valve temperature, only $T_g$ remains to be correlated with those parameters influencing its value. The relation between $T_g$ and the most important of these variables, fuel-air ratio, is a complex one. Consequently, an experimentally determined curve of $T_g$ as a function of fuel-air ratio is used to select the proper value of $T_g$ for use in equation (9). The effects of less important variables, such as combustion-air temperature and spark timing, will be subsequently discussed.

## APPARATUS

**Test setup.**—A conventional air-cooled cylinder mounted on an NACA universal test engine crankcase was used in this investigation. The cylinder bore and the stroke were 6⅛ and 7 inches, respectively. The engine compression ratio was 6.7. Standard laboratory equipment was used to measure engine speed, power output, and fuel and air consumption. A diagrammatic sketch of the test engine, auxiliary laboratory equipment, and instruments is presented in figure 2.

**Valves.**—Sodium-cooled valves of three different designs were equipped with thermocouples for the engine tests. One valve design (designated B′) was also tested without sodium. A comparison of the design features of these valves is shown in figure 3 and the main differences are summarized in the following table:

| Valve | Stem diameter (in.) | Throat diameter (in.) | Crown thickness (in.) | Crown coating | Internal coolant |
|---|---|---|---|---|---|
| A | 0.995 | 0.690 | 0.18–0.21 | AMS 5682 | Sodium |
| B | .682 | .283 | .14–.16 | None | do. |
| B′ | .682 | .283 | .14–.16 | do. | None |
| C | .682 | .422 | .14–.16 | do. | Sodium |

**Exhaust-valve thermocouple.**—Valve-operating temperatures were measured by a constantan-valve steel thermocouple. The method of installing the thermocouple in the valve is shown in figure 4. The thermocouple was calibrated by measuring the electromotive force developed as the valve crown was heated in a furnace. During calibration, the temperature of the valve crown was measured by an iron-constantan thermocouple attached to its outside surface. The manner in which the thermocouple was installed in the valve made possible the existence of parallel electric circuits through the valve seat and the stainless-steel tubing. Bench tests to check the effects of these parallel circuits indicated no effect on the calibration of the thermocouple.

**Cylinder thermocouples.**—The temperature of the outside surface of the cylinder head nearest the valve guide and the temperature of the rear-spark-plug bushing were measured by means of iron-constantan thermocouples. The location of the thermocouple used to measure the temperature of the outside surface of the cylinder head is shown in figure 1.

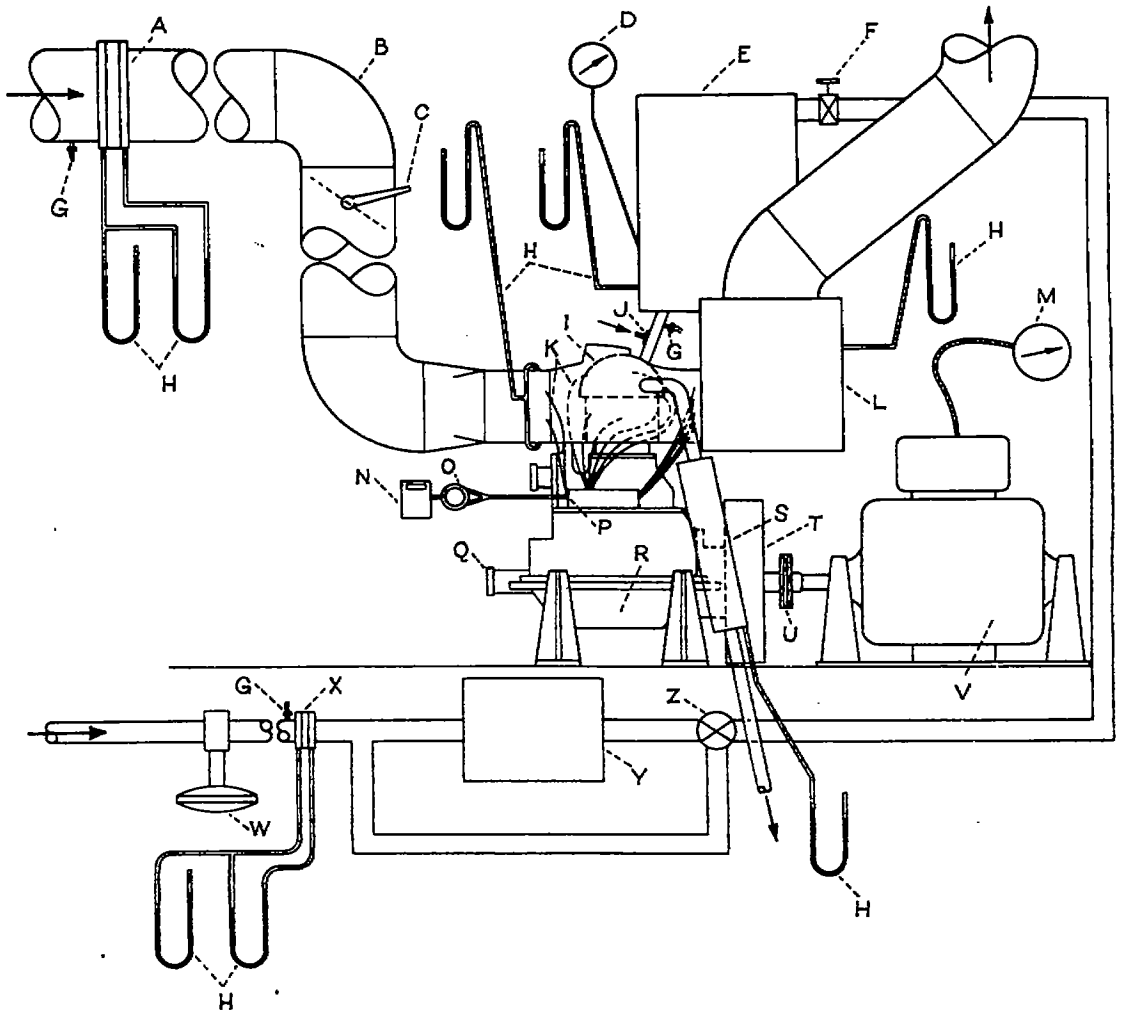


A, cooling-air orifice
B, cooling-air duct
C, cooling-air pressure regulator
D, remote reading thermometer
E, surge tank
F, throttle
G, thermocouples
H, manometers
I, test cylinder
J, manifold fuel injector
K, thermocouple leads
L, downstream cooling-air expansion tank
M, remote-reading dynamometer scale
N, self-balancing potentiometer
O, selector switch
P, thermocouple cold-junction box
Q, distributor
R, crankcase
S, exhaust expansion tank
T, flywheel
U, flexible coupling
V, dynamometer
W, combustion-air pressure regulator
X, combustion-air orifice
Y, air heater
Z, motor-controlled mixing valve

FIGURE 2.—Test engine, auxiliary equipment, and instruments.

## PROCEDURE

In order to evaluate the constants to be used in equation (9) for the particular air-cooled cylinder used in this investigation and to check the validity of the equation, the following engine tests were made:

1. The cooling-air pressure drop across the cylinder was varied over a wide range while the other conditions of operation were held constant. The purpose of this test was to secure data needed in evaluating the constant $m$ and to determine the local mean effective gas temperature at one fuel-air ratio. Data from this investigation were also used to evaluate the thermal-resistance factor of valve A.

2. The power output of the engine was varied while all other conditions were held constant for the purpose of evaluating the constants $n$ and $K$.

3. Investigations were made to determine the effect of fuel-air ratio on local mean effective gas temperature and the effect of engine speed on valve temperature.

The basic conditions at which all the investigations were made, the range over which each engine variable was investigated, and the valves used are shown in the following table:

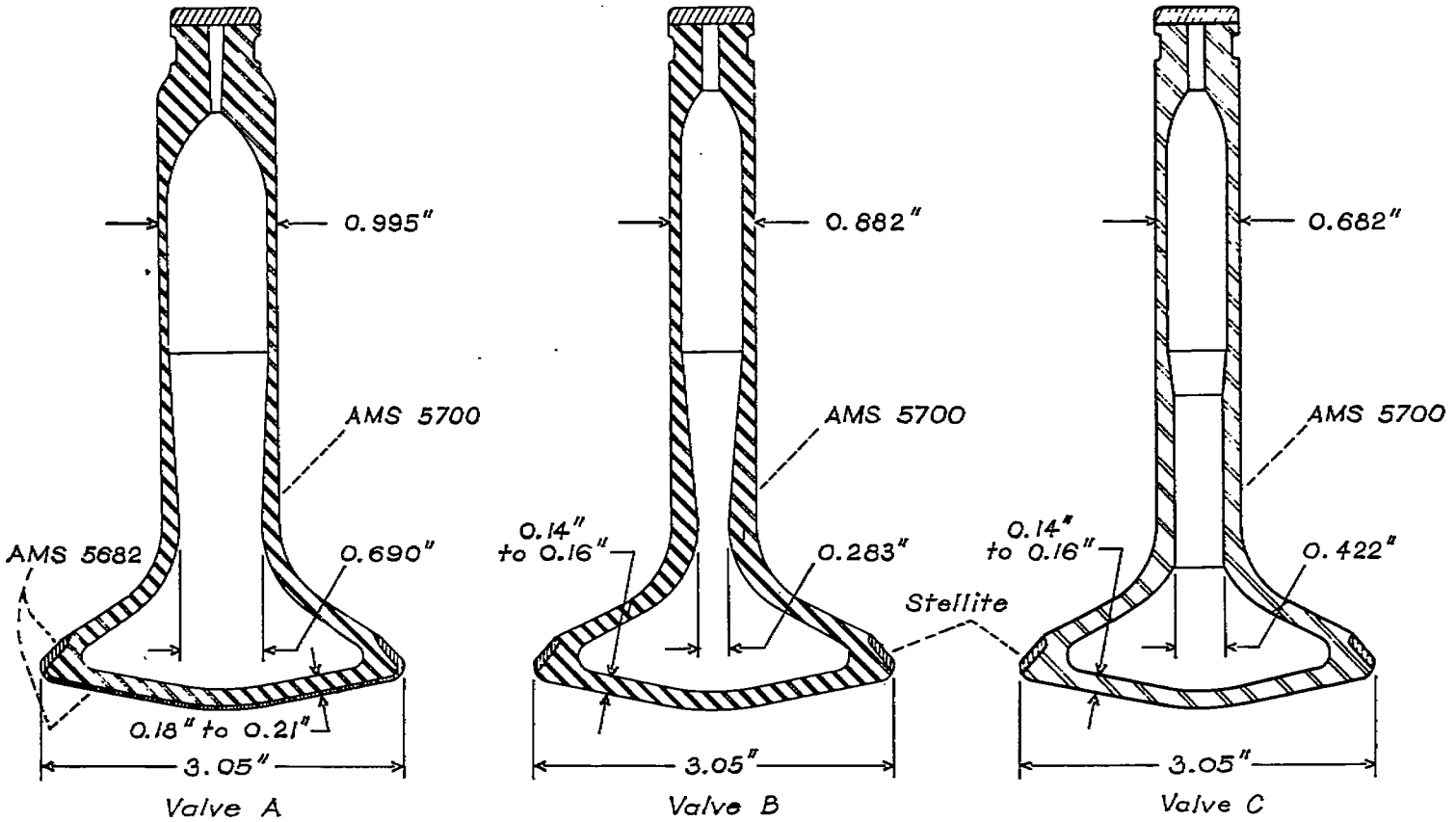


FIGURE 3.—Comparison of valve-design features.

| Operating variable | Basic | Range | Valve |
|---|---|---|---|
| Engine speed, rpm | 2200 | 1400–2200 | A, C |
| Combustion-air temperature, °F | 150 | ---------- | ---------- |
| Fuel-air ratio | 0.072 | 0.050–0.110 | A, B, B′, C |
| Cooling-air pressure drop across cylinder, in. water | 16 | 2–20 | A |
| Cooling-air temperature, °F | 60–80 | ---------- | ---------- |
| Spark timing, deg B. T. C. | 22½ | ---------- | ---------- |
| Indicated horsepower | 75.5, 117.0 | 70–140 | A, B, C |

4. In order that a completely independent check on the accuracy of the equation might be made, the temperature of each valve was determined at the following conditions:

| | |
|---|---|
| Engine speed, rpm | 2300 |
| Combustion-air temperature, °F | 150 |
| Fuel-air ratio | 0.09 |
| Spark timing, deg B. T. C. | 22½ |
| Indicated horsepower | 129 |
| Rear-spark-plug-bushing temperature, °F | 425 |

These conditions are approximately equal to take-off conditions for the engine investigated. Cooling-air pressure drop was varied in order to maintain a constant rear-spark-plug-bushing temperature to conform with usual practice at take-off power.

## RESULTS

**Local mean effective gas temperature $T_g$.**—The local mean effective gas temperature $T_g$ for the exhaust valve at a fuel-air ratio of 0.072 was determined from the data obtained in the variable cooling-air pressure-drop investigation. The temperature of a point on the outside surface of the cylinder nearest the valve guide was plotted against the

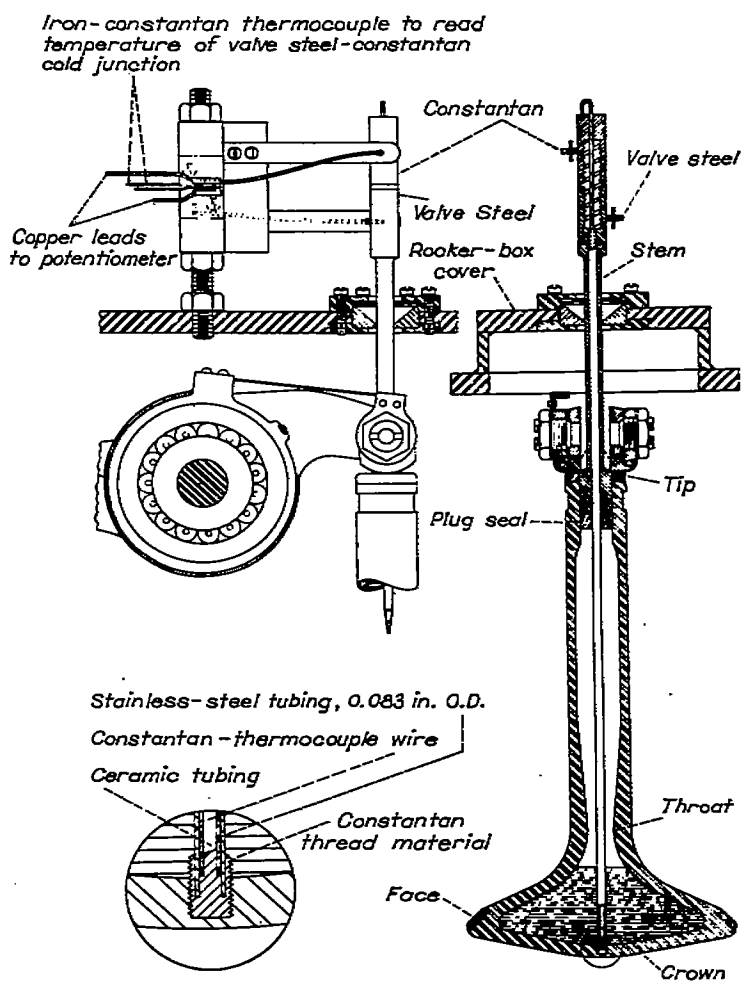


FIGURE 4.—Details of sodium-cooled exhaust valve equipped with thermocouple.

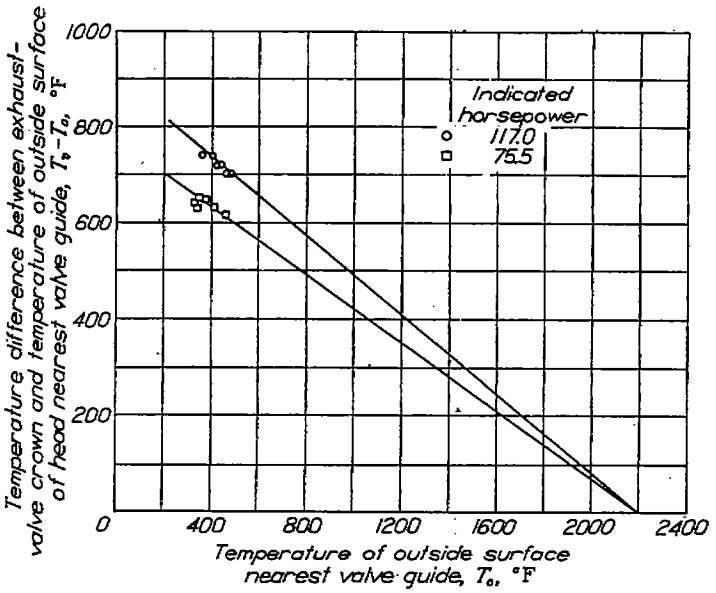


FIGURE 5.—Determination of local mean effective gas temperature $T_g$ at exhaust valve in test cylinder. Valve A; engine speed, 2200 rpm; fuel-air ratio, 0.072; combustion-air temperature, 150° F; spark timing, 22½° B. T. C.

temperature difference between this point and the exhaust-valve crown. In order to estimate $T_g$, the curve was extrapolated to the point where the temperature difference is zero (fig. 5). At this condition, the heat transfer is also zero and if thermal equilibrium is to be maintained, the temperature of the outside surface must be equal to the temperature of the valve crown, which in turn must be equal to the local mean effective gas temperature. The temperature of the outside surface of the cylinder near the valve guide was used rather than a temperature near the valve seat because most of the heat removed from the exhaust valve is transferred along a path through the valve stem and the valve guide. A value of 2200° F for $T_g$ was chosen as being most representative of the available data. The accuracy of the equation for correlating exhaust-valve temperatures, however, like those for correlating head and barrel temperatures is much more sensitive to the variation in $T_g$ with engine operating conditions than to the initial temperature selected. Local mean effective gas temperature $T_g$ obtained in this manner is not intended to represent the true exhaust-gas temperature but should be used only as a means of correlating valve-cooling data.

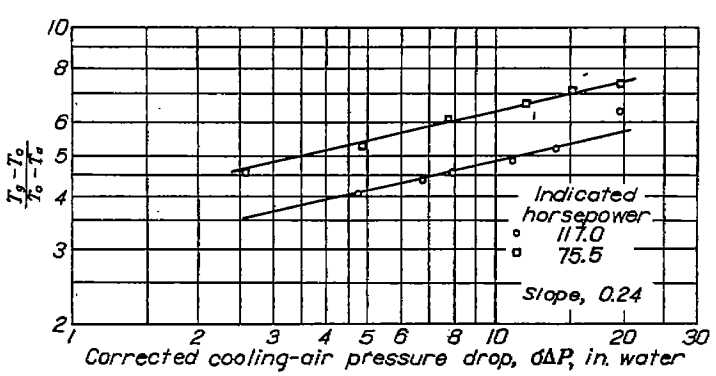


FIGURE 6.—Variation in $\frac{T_g - T_o}{T_o - T_a}$ with cooling-air pressure drop across cylinder. Valve A; engine speed, 2200 rpm; fuel-air ratio, 0.072; combustion-air temperature, 150° F; spark timing, 22½° B. T. C.

**Constant** $m$.—The value of the constant $m$ is dependent upon the external configuration of the cylinder and can be readily obtained from an investigation in which the cooling-air pressure drop is the only variable. A logarithmic plot of $\frac{T_g - T_o}{T_o - T_a}$ against corrected cooling-air pressure drop $\sigma\Delta P$ is shown in figure 6. The constant $m$ is equal to the slope of the curve.

**Thermal-resistance factor** $C$.—The thermal-resistance factor for valve A was also determined from data obtained from the variable cooling-air investigation. If the data at two different values of cooling-air pressure drop are substituted into equation (9) and then the two equations are combined, $C$ can be directly evaluated. Inasmuch as large variations in external cooling have relatively little influence on exhaust-valve temperature, small changes in any of the other operating variables (for example, fuel-air ratio) may offset large changes in cooling-air flow. It was therefore necessary that the investigation be carefully controlled and cover as wide a range of cooling-air flows as possible in order to get a representative value of $C$.

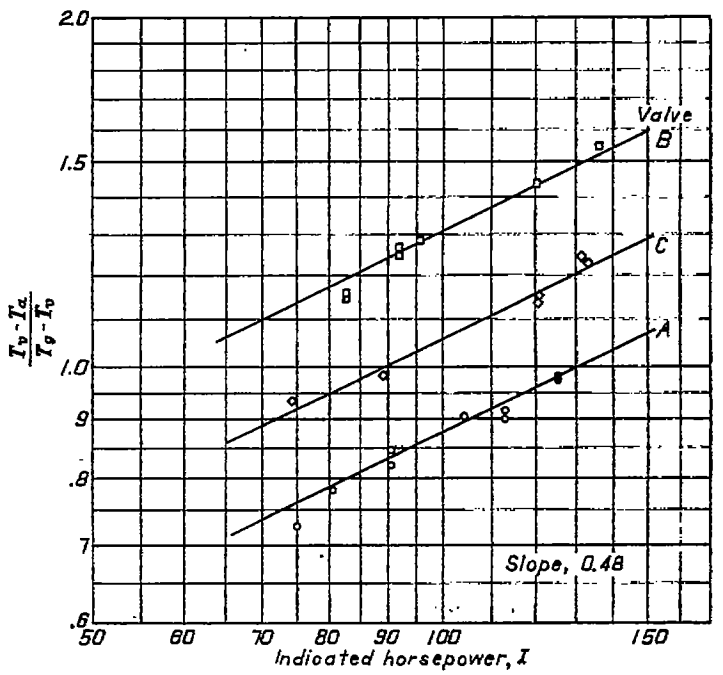


FIGURE 7.—Variation of $\frac{T_v - T_a}{T_g - T_v}$ with variation of indicated horsepower. Engine speed, 2200 rpm; fuel-air ratio, 0.072; cooling-air pressure drop, 16 inches of water; combustion-air temperature, 150° F; spark timing, 22½° B. T. C.

**Constants** $n$ **and** $K$.—The constants $n$ and $K$ were evaluated from the variable-power investigation. A logarithmic plot of $\frac{T_v - T_a}{T_g - T_v}$ against indicated horsepower is shown in figure 7, and the constant $n$ can be shown to be equal to the slope of the curve. Now $K$ can be evaluated by direct substitution in equation (9). After determination of the constants $n$ and $K$, $C$ was determined for the other valves tested from data obtained at a single test point. For the cylinder

investigated, the cylinder constants were found to have the following values: $K$, 0.076; $m$, 0.24; and $n$, 0.48. The correlating equation can now be written

$$\frac{T_g-T_c}{T_g-T_v}=0.076\ I^{0.48}\left[\frac{1}{(\sigma\Delta P)^{0.24}}+C\right] \tag{9a}$$

## DISCUSSION

### LOCAL MEAN EFFECTIVE GAS TEMPERATURE

In order to make the equation useful over a wide range of engine operating conditions, it is necessary to determine the effects of engine operating variables on $T_g$. Most important of these engine variables is fuel-air ratio. Values of valve temperature obtained for several valves over a wide range of fuel-air ratios were substituted into equation (9a) to determine the variation in $T_g$ with changes in fuel-air ratio. The results of these investigations are shown in figure 8. It can be seen in this figure that the data obtained for the different valves correlate reasonably well and give a single curve for local mean effective gas temperature $T_g$. It is of interest to note that $T_g$ at the exhaust valve is much more sensitive to fuel-air ratio than is the mean effective gas temperature for the cylinder head or barrel. (See reference 4.) For the exhaust valve, the local mean effective gas temperature varies from 2270° F at a fuel-air ratio of 0.067 to 1700° F at a fuel-air ratio of 0.11.

The influence of other engine variables on local mean effective gas temperature is less marked. An indication of the influence of spark timing on $T_g$ is shown in figure 9. The data for this figure were taken from reference 2. It is apparent from these data that the local mean effective gas temperature is not appreciably affected over the normal range of spark timing. Enough data are not available to determine a correlation between combustion-air temperature and local mean effective gas temperature at the exhaust valve. The small amount of data available, however, indicates that a change in combustion-air temperature results in approximately the same change in local mean effective gas temperature. Pinkel (reference 4) found that a change of 1° F in combustion-air temperature resulted in a change of approximately 0.6° F in effective gas temperature for the cylinder head and approximately 0.4° F for the cylinder barrel.

### THERMAL-RESISTANCE FACTOR

The thermal-resistance factor $C$ is a measure of the capacity of the valve to transmit heat to the cylinder head through the valve stem and seat and through the valve-guide boss. In a given cylinder, once the heat-flow paths from the valve to the surrounding cooling air are fixed by exhaust-port design, the thermal-resistance factor becomes a function of valve design. The thermal-resistance factor therefore provides a direct means for evaluating the relative merit of different valve designs and the effectiveness of internal valve coolants. The values of $C$ for the valves investigated at an engine speed of 2200 rpm are given in the following table:

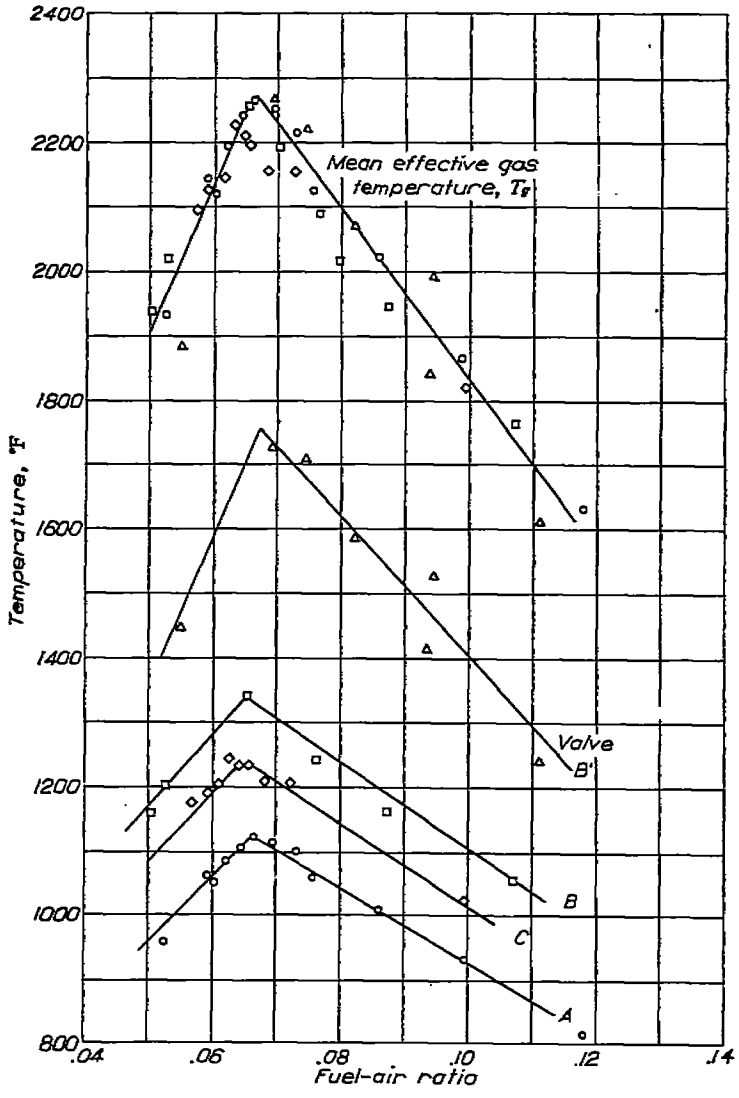


FIGURE 8.—Variation of mean effective gas temperature and valve temperature with fuel-air ratio. Engine speed, 2200 rpm; indicated horsepower, 117; combustion-air temperature, 150° F; cooling-air pressure drop, 16 inches of water; spark timing, 22½° B. T. C.

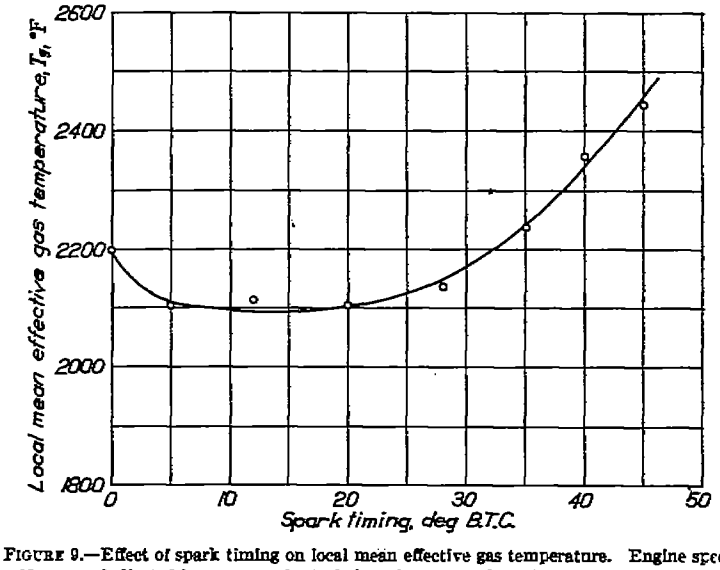


FIGURE 9.—Effect of spark timing on local mean effective gas temperature. Engine speed, 2200 rpm; indicated horsepower, 97; fuel-air ratio, 0.08; cooling-air pressure drop, 16 inches of water; combustion-air temperature, 150° F. (Data from reference 2, fig. 9.)

| Valve | Thermal-resistance factor, $C$ |
|---|---|
| A | 0.726 |
| B | 1.315 |
| B′ | 3.54 |
| C | 1.023 |

The influence of the thermal-resistance factor on exhaust-valve temperature can be seen in figures 10 and 11. Decreasing the thermal-resistance factor of the valve from 1.315 (for valve B) to 0.726 (for valve A) resulted in a decrease in valve temperature of approximately 200° F for one set of test conditions (fig. 10). In figure 11, a decrease of approximately the same magnitude is indicated over a wide range of engine powers.

When the sodium coolant was removed from the exhaust valve, the thermal-resistance factor increased to 3.54 and an increase in valve temperature ranging from 200° to 400° F over a range of fuel-air ratios resulted. (See fig. 8.)

The importance of allowing sufficient internal cross-sectional area to permit unrestricted flow of internal coolant is apparent from a comparison of thermal-resistance factors for valves B and C. When the internal diameter of the valve was increased at the restricted throat section, the thermal-resistance factor of that valve was reduced to a value approximately 22 percent lower than that of an otherwise similar valve. In a check investigation, a corresponding reduction in valve temperature of 100° F was observed, as shown in figure 10.

The thermal-resistance factor of a sodium-cooled exhaust valve may vary as a function of engine speed. The data of figure 12 indicate that valve temperatures for valves A and C are almost independent of engine speed over the range

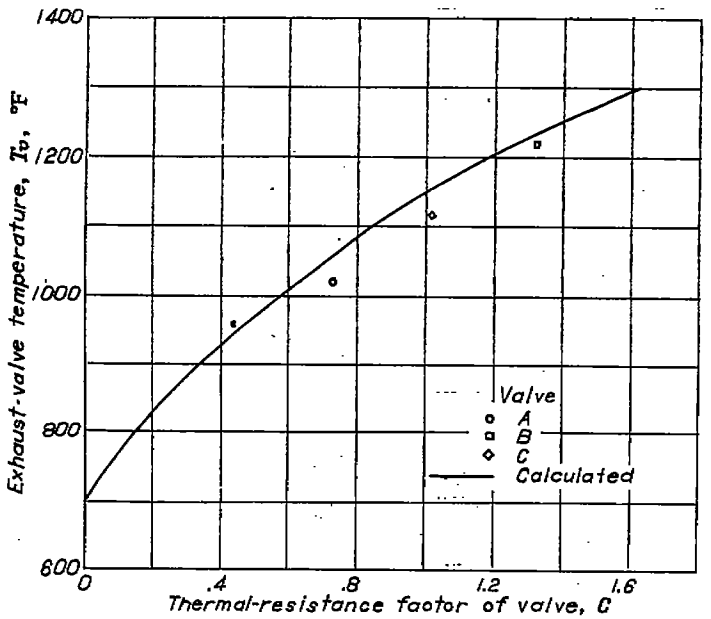


FIGURE 10.—Effect of thermal-resistance factor on exhaust-valve temperature. Engine speed, 2300 rpm; indicated horsepower, 129; fuel-air ratio, 0.09; combustion-air temperature, 150° F; rear-spark-plug-bushing temperature, 425° F.

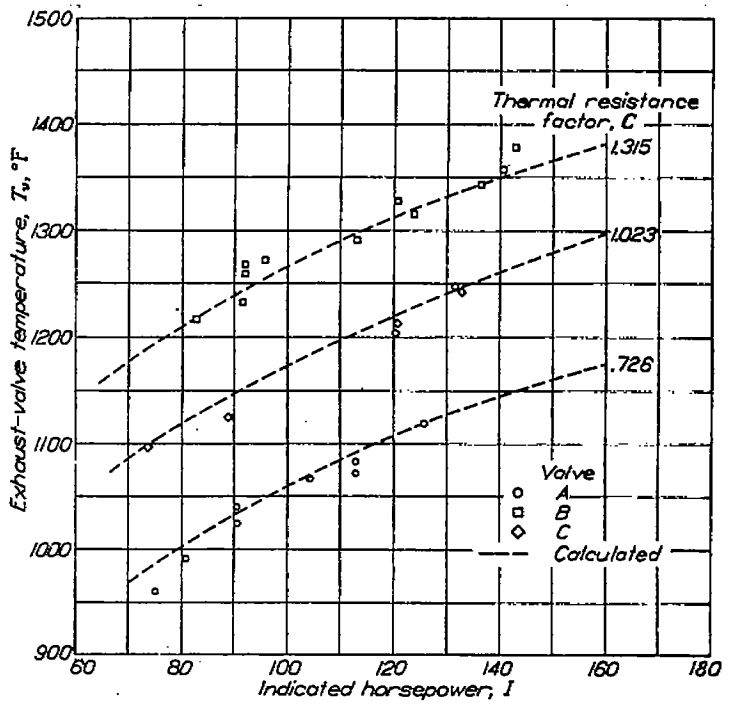


FIGURE 11.—Comparison of calculated and experimentally determined exhaust-valve temperatures in air-cooled cylinder. Engine speed, 2200 rpm; fuel-air ratio, 0.072; combustion-air temperature, 150° F; cooling-air pressure drop, 16 inches of water.

tested. This independency indicates that the thermal-resistance factors of valves A and C are also independent of engine speed. Data available from reference 2, however, indicate that at a given power, valve temperature decreases with an increase in engine speed for a valve similar in design to valve B. This apparent discrepancy may be explained by the fact that the flow of sodium coolant within a valve similar in design to valve B is restricted by the narrow throat section. It is possible that this restriction tends to reduce the coolant flow within the valve disproportionately with a reduction in engine speed and thereby raises the valve tem-

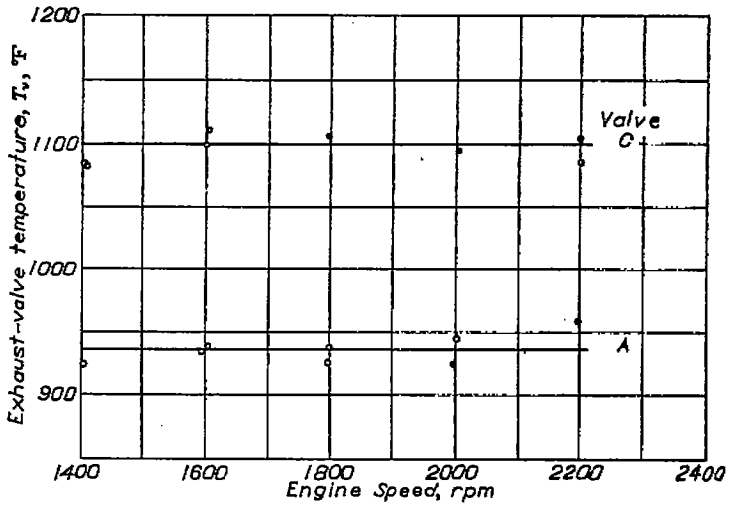


FIGURE 12.—Variation of exhaust-valve temperature with engine speed. Indicated horsepower, 71.5; fuel-air ratio, 0.072; combustion-air temperature, 150° F; cooling-air pressure drop, 16 inches of water.

perature. The change in exhaust-valve temperature with speed reported in reference 2, however, is quite small and the use of an average value of $C$ over the range of normal engine speed would in all probability introduce only a small error in the correlating equation.

### ACCURACY OF CORRELATING EQUATION

A comparison of calculated and experimentally determined valve operating temperatures for the check test conditions previously listed is shown in figure 10. The maximum deviation between the calculated and experimental values is approximately 30° F. Figure 11 shows a comparison of calculated and experimentally determined exhaust-valve temperatures over a wide range of engine powers for the three valves tested. Maximum deviation between measured and calculated temperature in this case is approximately 40° F. A small part of this variation in temperature may be due to the variation in cooling-air temperature, which was not controlled during the engine investigations. Figures 10 and 11 indicate that operating temperatures of the exhaust valve in a given cylinder can be predicted with reasonable accuracy provided the constants for the cylinder are known.

## SUMMARY OF RESULTS

From an investigation of the operating temperatures of the exhaust valve in a large air-cooled cylinder, the following results were obtained:

1. A semiempirical equation developed herein can be used to correlate exhaust-valve temperatures with engine operating conditions and valve design. The general form of this equation is

$$\frac{T_v-T_a}{T_g-T_v}=KI^n\left[\frac{1}{(\sigma\Delta P)^m}+C\right]$$

where

$T_a$ temperature of cooling air, (°F)
$T_g$ local mean effective gas temperature, (°F)
$T_v$ temperature of exhaust-valve crown, (°F)
$I$ indicated horsepower
$\Delta P$ cooling-air pressure drop across cylinder, (in. water)
$\sigma$ ratio of cooling-air density at inlet of cylinder cowling to density of NACA standard air
$C$ thermal-resistance factor, dependent on valve design
$K$, $n$, $m$ constants for given cylinder

For the cylinder investigated, the values of the cylinder constants were found to be: $K$, 0.076; $n$, 0.48; and $m$, 0.24.

2. The local mean effective gas temperature $T_g$ at the exhaust valve was determined to have a value of 2200° F at a fuel-air ratio of 0.072. It was found that $T_g$ was very sensitive to changes in fuel-air ratio, ranging from 2270° F at a fuel-air ratio of 0.067 to 1700° F at a fuel-air ratio of 0.11.

3. Tests of several valve designs in which the thermal-resistance factor $C$ varied from 0.726 to 3.54 showed that the calculated and experimentally determined exhaust-valve temperatures were in good agreement. The largest deviation from calculated values was approximately 40° F. This close agreement indicates that the correlation method is a good means for evaluating the relative merit of different valve designs and the effectiveness of internal valve coolants.

Aircraft Engine Research Laboratory,
National Advisory Committee for Aeronautics,
Cleveland, Ohio, *October 1, 1945.*

## REFERENCES

1. Gibson, A. H., and Baker, H. Wright: Exhaust-Valve and Cylinder-Head Temperatures in High-Speed Petrol Engines. Proc. Inst. Mech. Eng., vol. II, Dec. 1923, pp. 1045–1092.
2. Sanders, J. C., Wilsted, H. D., and Mulcahy, B. A.: Operating Temperatures of a Sodium-Cooled Exhaust Valve as Measured by a Thermocouple. NACA Rep. No. 754, 1943.
3. Mulcahy, B. A., and Zipkin, M. A.: Tests of Improvements in Exhaust-Valve Performance Resulting from Changes in Exhaust-Valve and Port Design. NACA ARR No. E5G26, 1945.
4. Pinkel, Benjamin: Heat-Transfer Processes in Air-Cooled Engine Cylinders. NACA Rep. No. 612, 1938.
5. Pinkel, Benjamin, and Ellerbrock, Herman H., Jr.: Correlation of Cooling Data From an Air-Cooled Cylinder and Several Multicylinder Engines. NACA Rep. No. 683, 1940.