JUL 17 1946

# NATIONAL ADVISORY COMMITTEE FOR AERONAUTICS

TECHNICAL NOTE

No. 1014

## STRESSES IN AND GENERAL INSTABILITY OF MONOCOQUE CYLINDERS WITH CUTOUTS

## II - CALCULATION OF THE STRESSES IN A CYLINDER WITH A SYMMETRIC CUTOUT

By N. J. Hoff, Bruno A. Boley, and Bertram Klein
Polytechnic Institute of Brooklyn

FOR REFERENCE

NOT TO BE TAKEN FROM THIS ROOM

Washington
June 1946

N A C A LIBRARY
LANGLEY MEMORIAL AERONAUTICAL
LABORATORY
Langley Field, Va.

NATIONAL ADVISORY COMMITTEE FOR AERONAUTICS

TECHNICAL NOTE NO. 1014

# STRESSES IN AND GENERAL INSTABILITY OF MONOCOQUE CYLINDERS WITH CUTOUTS

## II – CALCULATION OF THE STRESSES IN A CYLINDER WITH A SYMMETRIC CUTOUT

By N. J. Hoff, Bruno A. Boley, and Bertram Klein

## SUMMARY

A numerical procedure is presented for the calculation of the stresses in a monocoque cylinder with a cutout. In the procedure the structure is broken up into a great many units; the forces in these units corresponding to specified distortions of the units are calculated; a set of linear equations is established expressing the equilibrium conditions of the units in the distorted state; and the simultaneous linear equations are solved. A fully worked out numerical example, corresponding to the application of a pure bending moment, gave results in good agreement with experiments carried out earlier at the Polytechnic Institute of Brooklyn.

## INTRODUCTION

Actual airplanes differ greatly from the idealized structures that underlie most theoretical analyses. The reason for these deviations can be found in the great difficulties involved in applying the theory of elasticity to the irregular and complex structural parts of airplanes. It is believed that the most promising approach to these complex problems is the one in which the structure is imagined to be broken up into a great number of "units," the forces in these units corresponding to specified distortions of the units are calculated, a set of linear equations is established expressing the equilibrium conditions of the units in the distorted state, and the simultaneous linear equations are solved.

The set of linear equations, excluding the load terms, forms what Southwell (reference 1) called the "operations table." In Southwell's relaxation procedure the equations are solved by a method of step-by-step approximations. In the past 2 years a considerable amount of work has been done at the Polytechnic Institute of Brooklyn in applying Southwell's method to the stress analysis of reinforced thin-walled structures. It was easily possible to establish a rapidly converging procedure in the case of stiffened panels (references 2 and 3). In the case of ring problems (references 4 and 5) the convergence was found to be poor as a rule, and suggestions were made for solving the equations either directly by matrix methods, or by a procedure denoted as the "growing unit" method.

The problem of the calculation of the stresses in a reinforced monocoque cylinder combines the two elements discussed in the earlier reports, namely, reinforced panels and rings. The authors were unable to devise a pure step-by-step procedure that would lead to a solution of the equations represented by the operations table with a reasonable expenditure of work and time. On the other hand, the solution can be found comparatively easily if the operations table is set up with the aid of the expressions developed in this report and the equations which the operations table represents are solved by matrix methods. A fully worked out numerical example gave results in good agreement with the tests described in reference 6.

This investigation, conducted at the Polytechnic Institute of Brooklyn, was sponsored by and conducted with the financial assistance of the National Advisory Committee for Aeronautics.

## SYMBOLS

| | |
|---|---|
| $a$ | distance between rings measured in the x-direction |
| $a, b, c, d, e, f, g, h, j, k, l, m, n, p, q, r, s, t, u, r', s', t'$ | portions of operations table |
| $a_n, b_n, c_n$ | Fourier coefficients |
| $A$ | cross-sectional area of a stringer plus its effective width of sheet |

| | |
|---|---|
| A,B,C,D,E,F,G, H,J,K,O,P | points of intersection of rings and stringers |
| A,B,C,D,E,F,G, H,J,K,L,M,N,P, Q,R,S,T,U,V,$V_1$, W,X,Y,Z,U',V', $V_1'$,W',Y',Z' | portions of operations table |
| A–A, B–B, C–C, D–D, A'–A', B'–B', C'–C', D'–D' | rings |
| AB, BC, CD, DD' | fields between rings |
| E | Young's modulus |
| $f_s$ | shear stress |
| G | shear modulus |
| $I_R$ | moment of inertia of ring cross section plus its effective width for bending in its plane |
| L | distance between stringers measured along the circumference, that is, developed length of ring segment between adjacent stringers |
| M | bending moment acting in a transverse section of the cylinder |
| n | index |
| N | bending moment acting in the plane of a ring |
| $p_1$,$p_2$ | unknown coefficients |
| P | resultant force acting in a transverse section of the cylinder |
| q | shear flow |
| r | radius of cylinder |

| | |
|---|---|
| R | radial force |
| SS | line of symmetry |
| t | sheet thickness |
| T | tangential force |
| u | tangential displacement of an intersection point of a ring and stringer |
| v | radial displacement of an intersection point of a ring and stringer |
| w | rotation of a section of a ring in its own plane |
| X | axial force |
| $\alpha_n, \alpha_r, \alpha_t$ | coefficients used in the calculation of forces and moments caused by the shear flow existing in a panel |
| $\beta$ | angle subtended by ring segment |
| $\gamma$ | section-length parameter |
| $\Gamma = Gt/2$ | |
| $\eta$ | vertical downward translation of a ring as a rigid body |
| $\Lambda = GtL/a$ | |
| $\xi$ | axial displacement; also the ratio of effective shear area of a section to the actual area of the section |
| $\varphi$ | angular coordinate |
| $\omega$ | rigid body rotation of a ring |
| $\Omega = Gta/4L$ | |

The symbols used to denote influence coefficients are defined in the following manner:

$(\widehat{ab})$ stands for the force or moment a caused by a unit movement in the direction of b (which direction is that of

the force R or T, or of the moment N). Thus $(\widehat{nn})$ is the moment due to a unit rotation; while $(\widehat{tr})$ is the tangential force arising from a unit radial displacement. Further, to distinguish the reactions at the fixed end from those at the movable end, the subscripts F and M are employed. Consequently, $(\widehat{nt})_F$ is the moment arising at the fixed end of the curved bar as a result of a unit tangential displacement of the movable end; while $(\widehat{tt})_M$ stands for the tangential force at the movable end due to a unit tangential displacement of that end.

It should be noted that all the reactions considered here are acting from the support upon the curved bar.

## CALCULATION OF THE DEFORMATIONS AND STRESSES IN THE SIMPLIFIED CYLINDER

### Assumptions Regarding the Structure

The actual monocoque cylinder (fig. 1a) contains 16 stringers and 8 rings, including the 2 end rings. The cutout in the cylinder extends over three ring fields and two stringer fields. There are, therefore, 106 panels in the structure not counting the 6 panels cut out. Since the "unit" of the structure is the panel and its bordering stringer and ring segments, it appears that there are too many units to permit a calculation of the displacement and stresses with a reasonable amount of work. Hence it was decided that the actual structure should be replaced by the simplified one shown in figure 1b.

It was anticipated that the effect of the cutout upon the stress distribution would be important only in the neighborhood of the cutout. This is the justification for choosing small size units close to and large size units farther away from the cutout. In order to avoid a change in the total amount of stringer cross section in the cylinder, the sizes of the stringers bordering large panels were increased, as may be seen from the data contained in figure 1b. The total width of sheet between adjacent stringers was considered effective in carrying normal stress in the axial direction and was distributed evenly between the adjacent stringers. Because of this assumption the

results of the calculations can be anticipated to agree with experiment only when the loads applied are so small that the panels of sheet are in an unbuckled state. When calculations are to be carried out for higher loads, a smaller value should be assumed for the effective width. The effective width of sheet acting with the ring was taken equal to the width of the ring.

Because of the symmetry of both structure and loading only one-quarter of the monocoque cylinder was considered in the calculations.

In regard to the mechanical properties of the elements of the structure the following assumptions were made:

1. The stringers have only extensional rigidity; they are very weak in bending and torsion.

2. The rings are resistant to shearing and bending in their plane of curvature and to extension, but are very weak in bending out of their plane and in torsion.

3. The sheet is resistant only to shearing deformations. The extensional rigidity of the sheet is taken into account through the assumption of an effective width the area of which is added to the cross-sectional area of stringers and rings. A consequence of this assumption is that the shear stress must be constant over any single panel.

These assumptions are believed to represent the essential features of the elements of the structure. The agreement between the results of the calculations and the experiments substantiates this belief.

## The Unit Problem

1. Axial displacement $\xi$ at point A.- When point A in figure 2 is displaced a distance $\xi$ axially (in the x-direction), the force $X_{D\ str}$ exerted by the stringer segment AD upon the constraint at D is

$$X_{D\ str} = (EA_{str}/a)\xi \tag{1a}$$

where $A_{str}$ is the cross-sectional area of the stringer plus its effective width of sheet. At the same time a constant shear flow $q_{A\xi}$ will be caused in the panel:

$$q_{A\xi} = (Gt/2L)\xi \tag{1b}$$

In figure 2 the shear flow is indicated as acting from the sheet upon the edge reinforcements. As in reference 2 one-half the shear force transmitted from the sheet to the edge stringer is considered to be acting upon each of the constraints at the end points of the stringer. Consequently, the axial force $X_{D\ sh}$ transmitted by shear to the constraint at D is

$$X_{D\ sh} = -(Gta/4L)\xi \tag{1c}$$

The total axial force $X_D$ acting upon the constraint at D is

$$X_D = [(EA_{str}/a) - (Gta/4L)]\xi \tag{1}$$

The shear flow $q_A$ acting upon the ring segment AB causes forces and moments to act upon the constraints at A and B which can be computed from the data given in reference 5. It should be remembered, however, that in this reference the quantities listed are forces and moments acting from the constraints upon the ring segment at the end point toward which the shear flow is directed, and the signs correspond to the beam convention (fig. 3). At the other end the same numerical values apply, but the signs are inverted. Since in figure 2 the shear flow is directed toward point A, and since the forces and moments acting upon the constraint are sought, a multiplication by −1 must be carried out. The forces and moments acting upon the constraint at A are, therefore, according to the beam convention

$$\left.\begin{aligned} T_A &= -\alpha_t\, Lq_A = -\alpha_t(Gt/2)\xi \\ R_A &= -\alpha_r\, Lq_A = -\alpha_r(Gt/2)\xi \\ N_A &= -\alpha_n\, L^2 q_A = -\alpha_n L(Gt/2)\xi \end{aligned}\right\} \tag{2a}$$

Similarly at point B

$$\left.\begin{aligned} T_B &= \alpha_t\ Lq_A = \alpha_t(Gt/2)\xi \\ R_B &= \alpha_r\ Lq_A = \alpha_r(Gt/2)\xi \\ N_B &= \alpha_n\ L^2 q_A = \alpha_n L(Gt/2)\xi \end{aligned}\right\} \qquad (2b)$$

If these equations are rewritten to agree with the frame convention (fig. 3), the following is obtained:

$$\left.\begin{aligned} T_A &= \alpha_t(Gt/2)\xi \\ R_A &= -\alpha_r(Gt/2)\xi \\ N_A &= \alpha_n L(Gt/2)\xi \end{aligned}\right\} \qquad (2)$$

$$\left.\begin{aligned} T_B &= \alpha_t(Gt/2)\xi \\ R_B &= \alpha_r(Gt/2)\xi \\ N_B &= \alpha_n L(Gt/2)\xi \end{aligned}\right\} \qquad (3)$$

Since the shear flow transmitted to ring segment CD is equal and opposed to that transmitted to ring segment AB,

$$\left.\begin{aligned} T_C &= -T_B & R_C &= -R_B & N_C &= -N_B \\ T_D &= -T_A & R_D &= -R_A & N_D &= -N_A \end{aligned}\right\} \qquad (4)$$

It is easily verified on the basis of the principles developed in reference 2 that the axial forces acting upon the constraints at points A, B, and C are:

$$X_A = -[(EA_{str}/a) + (Gta/4L)]\xi \qquad (5)$$

$$X_B = (Gta/4L)\xi \qquad (6)$$

$$X_C = (Gta/4L)\xi \qquad (7)$$

2. Tangential Displacement at Point A.- When point A is displaced tangentially through a distance u (in the positive direction of the beam convention) the forces and moments acting upon the ring segment at A and B can be computed from the data presented in reference 5.

$$\left.\begin{aligned} T_A &= \widehat{tt}_M u \\ R_A &= \widehat{rt}_M u \\ N_A &= \widehat{nt}_M u \end{aligned}\right\} \qquad (8a)$$

$$\left.\begin{aligned} T_B &= \widehat{tt}_F u \\ R_B &= \widehat{rt}_F u \\ N_B &= \widehat{nt}_F u \end{aligned}\right\} \qquad (8b)$$

At point A a positive u displacement according to the frame convention is equal to a negative u displacement according to the beam convention. If a positive u displacement is now assumed according to the frame convention, the forces and moments are expressed as they are acting upon the constraint, and the signs are written in agreement with the frame convention, equations (8a) and (8b) become

$$\left.\begin{aligned} T_A &= -\widehat{tt}_M u \\ R_A &= \widehat{rt}_M u \\ N_A &= -\widehat{nt}_M u \end{aligned}\right\} \qquad (8)$$

$$\left.\begin{aligned} T_B &= \widehat{tt}_F u \\ R_B &= \widehat{rt}_F u \\ N_B &= \widehat{nt}_F u \end{aligned}\right\} \qquad (9)$$

At the same time the displacement $u$ gives rise to a uniform shear flow in the panel. The direction of the shear flow acting upon the edge reinforcements of the panel is indicated in figure 4. Its magnitude can be calculated with the aid of Maxwell's reciprocal theorem. When A was displaced in the x-direction, the induced shear flow caused a tangential force at A of a magnitude

$$T_A = \alpha_t(Gt/2)\xi$$

according to the first of equations (2). Hence when A is displaced tangentially a distance $u$, according to the reciprocal theorem the axial force caused at A must be equal to

$$X_A = \alpha_t(Gt/2)u \tag{10}$$

This axial force, however, can occur only if the magnitude of the shear flow $q_{Au}$ is given by

$$q_{Au} = \left|\alpha_t(Gt/a)u\right| \tag{11a}$$

The direction of the shear flow must be determined from equation (10). Since $\alpha_t$ is negative within the range of angles represented in the graphs of reference 5, the force exerted upon the constraint at A is directed toward the left in figure 4. Consequently, the shear flow acting upon the edge reinforcements of the panel must be as shown in figure 4.

It may be seen that the direction of the shear flow is the same in figures 2 and 4. Equations (2) and (3) can be easily transformed to correspond to the values caused by the tangential displacement.

$$\left.\begin{aligned} T_A &= -\alpha_t^2(GtL/a)u \\ R_A &= \alpha_r\alpha_t(GtL/a)u \\ N_A &= -\alpha_n\alpha_t(GtL^2/a)u \end{aligned}\right\} \tag{11}$$

$$\left.\begin{aligned} T_B &= -\alpha_t^2(GtL/a)u \\ R_B &= -\alpha_r\alpha_t(GtL/a)u \\ N_B &= -\alpha_n\alpha_t(GtL^2/a)u \end{aligned}\right\} \qquad (12)$$

Equations (4) are valid here also

The total forces and moments at A are obtained by adding up corresponding values in equations (8) and (11):

$$\left.\begin{aligned} T_A &= -[\widehat{tt}_M + \alpha_t^2(GtL/a)]u \\ R_A &= [\widehat{rt}_M + \alpha_r\alpha_t(GtL/a)]u \\ N_A &= -[\widehat{nt}_M + \alpha_n\alpha_t(GtL^2/a)]u \end{aligned}\right\} \qquad (13)$$

Similarly the total forces and moments at B can be calculated from equations (9) and (12):

$$\left.\begin{aligned} T_B &= [\widehat{tt}_F - \alpha_t^2(GtL/a)]u \\ R_B &= [\widehat{rt}_F - \alpha_r\alpha_t(GtL/a)]u \\ N_B &= [\widehat{nt}_F - \alpha_n\alpha_t(GtL^2/a)] \end{aligned}\right\} \qquad (14)$$

At C the forces and moments are:

$$\left.\begin{aligned} T_C &= \alpha_t^2(GtL/a)u \\ R_C &= \alpha_r\alpha_t(GtL/a)u \\ N_C &= \alpha_n\alpha_t(GtL^2/a)u \end{aligned}\right\} \qquad (15)$$

At D the forces and moments are:

$$\left.\begin{aligned} T_D &= \alpha_t^2(GtL/a)u \\ R_D &= -\alpha_r\alpha_t(GtL/a)u \\ N_D &= \alpha_n\alpha_t(GtL^2/a)u \end{aligned}\right\} \qquad (16)$$

The axial forces can be calculated from the following equations:

$$X_B = X_C = -X_D = -X_A = -\alpha_t(Gt/2)u \qquad (17)$$

3. Radial Displacement $v$ and Rotation $w$ at Point A.

The calculations needed for determining the forces and moments corresponding to these distortions are quite similar to those given under (2). The results of the calculations are presented in the diagrams to be discussed under (4).

4. The four-panel problem.- In the general case any point belongs simultaneously to four different panels. A displacement of the point, therefore, will cause forces and moments to appear in four panels. These forces and moments can be calculated without difficulty from the results of the single-panel unit problem. For the convenience of the stress analyst the four-panel problem has been worked out and the results of the calculations are presented in figures 7 to 10. In figure 10a the sign convention is shown.

When the sheet is in a buckled state in any particular panel, a reduced value should be used for $G$. If one or two of the four panels adjacent to a point are cut out, $G$ should be put equal to zero for those panels.

## The Operations Table

The operations table contains the forces and moments acting upon the constraints caused by the individual unit displacements. The individual items in the table are calculated according to the principles presented in the preceding section. Each number in the operations table represents the value of the force quantity indicated at the left end of the row in which the number is located, caused by the unit displacement indicated at the top of the column in which the number is located. This arrangement differs from the one used in references 2 to 4 insofar as the headings of the columns in this table are those of the rows in the references mentioned, and vice versa. The sets of the headings of the columns and rows, however, are interchangeable since the operations table is symmetric with respect to its principal diagonal. The number of individual operations - that is, the number of degrees of freedom of the structure - can be determined with the aid of the following considerations.

As was stated earlier, it suffices to consider only one-quarter of the entire structure in the calculations because of the symmetry of both structure and loading.

Points K, L, M, N, and O of the end ring are considered rigidly fixed. In the tests described in reference 6 they were attached to a rigid frame. Points B, C, D, F, G, and H are free to move axially, tangentially, and radially, and the sections of the rings at these points are free to rotate in the plane of the ring. Points A, E, and J are free to move axially and radially, their other two types of motion being excluded because they are antisymmetric with respect to the plane of symmetry of the cylinder passing through points K, A, O, E, and J.

Altogether, the system has 30 degrees of freedom. The displacements corresponding to them are arranged according to the following scheme in the operations table (table 1). First, all the axial displacements are listed, nine in number. They are followed by all the other displacements of each of the points of ring ABCDE, arranged in the order of tangential displacement, radial displacement, and rotation. Altogether, there are 11 such operations if the antisymmetric distortions at points A and E are excluded. Finally, the 10 individual operations in the plane of ring FGHJ are listed.

In the appendix it is shown by means of typical examples how the entries in the operations table are calculated.

## Calculation of Displacements

As far as the loading is concerned, the forces acting in the end sections upon the individual stringers are not stipulated, but it is required that they add up to a pure bending moment acting in the vertical axial plane of symmetry of the cylinder. On the other hand, it is known that ring FGHJ must remain plane during the distortions. The calculation of the distortions of the structure is, therefore, carried out in the following manner.

Plane FGHJ is assumed to be rotated about the horizontal axis in its plane passing through point H. The angle of rotation is defined by the assumption that the axial displacement of point J is 0.001 inch.

It was shown in reference 4 that the operations table represents a set of simultaneous linear equations. For instance, the first row in the operations table (table 1) may be written in the form

$$-113.9\xi_A + 38.9\xi_B + 0.934v_A + 11.9u_B - 0.934v_B + 0.305w_B = 0$$

As a second example, row 5 reads:

$$17\xi_D - 719\xi_E + 7.3\xi_H + 394.7\xi_J$$
$$- 11.7u_H - 3.78v_H - 5.05w_H + 3.78v_J = 0$$

In this equation the values of $\xi_H$ and $\xi_J$ are 0 and 1, respectively, according to the assumptions made regarding the rotation of ring FGHJ. (In the operations table the unit axial displacement is 0.001 in.) Consequently, the entry in column 9 and row 5 is a known quantity having the value $394.7 \times 1 = 394.7$ pounds. It can be taken over to the right-hand side of the equation. Since the entry in column 8 and row 5 is zero because $\xi_H = 0$, the equation corresponding to row 5 may be written as

$$17\xi_D - 719\xi_E - 11.7u_H - 3.78v_H - 5.05w_H + 3.78v_J = -394.7$$

It is easy to see that the complete set of equations corresponding to the assumed rotation of ring FGHJ can be obtained by multiplying the figures listed in each column corresponding to an assumed axial displacement by the assumed value of the displacement, transferring the numbers obtained to the right-hand side of the equations, and adding up algebraically the numbers on the right-hand side of each equation.

The terms contained in rows 6 to 9 of the operations table add up to the axial forces acting upon points F, G, H, and J, respectively. They need not be equated to zero since, because of the symmetry, equal and opposite forces originating from the omitted other half of the cylinder automatically balance them. For this reason, rows 6 to 9 must be omitted from the set of equations to be solved. They will be used later for establishing the nature of the external loading of the cylinder.

The set of the remaining 26 equations was solved by Doolittle's method (references 7 and 8). In other words the 26 displacements and rotations were calculated that correspond to zero resultant force and moment at each point of the structure. It should be noted, however, that equations of equilibrium at points of the fixed ring KLMNO were not taken into account since the rigid fixation is capable of providing any reactions that are needed for equilibrium. Similarly, the equations of equilibrium of the axial forces at the middle ring FGHJ were not considered because they were balanced by equal and opposite forces arising from the symmetric other half of the cylinder, as mentioned before. The forces and moments arising in the two symmetric halves of the cylinder in the T, R, and N directions do not balance one another at the middle ring FGHJ but add up, since they are equal in both magnitude and sense. The conditions of equilibrium of these forces and moments are consequently included in the set of equations.

The displacement quantities obtained follow:

$$\left.\begin{array}{lll}
\xi_A = -0.1035 & \xi_B = -0.4676 & \xi_C = -0.4105 \\
\xi_D = 0.0001 & \xi_E = 0.5735 & \xi_F = -0.9239 \\
\xi_G = -0.7071 & \xi_H = 0 & \xi_J = 1.0000 \\
v_A = 2.0291 & & \\
u_B = 0.3233 & v_B = -0.9576 & w_B = -0.7573 \\
u_C = -0.2924 & v_C = -1.2685 & w_C = 0.4316 \\
u_D = -0.1146 & v_D = 0.5806 & w_D = -0.2831 \\
v_E = 1.3471 & & \\
u_F = -0.3165 & v_F = 0.1872 & w_F = -0.1772 \\
u_G = -0.4035 & v_G = -0.8034 & w_G = -0.4348 \\
u_H = -1.7210 & v_H = -0.7722 & w_H = 0.5665 \\
v_J = -0.6707 & &
\end{array}\right\} \quad (18)$$

It may be noted that the unit displacement is 0.001 inch, and the unit rotation 0.001 radian.

Substitution of the values obtained into the equations corresponding to the sixth to ninth rows of the operations table gives the resultant forces acting upon the constraints at points F to J in the axial direction. The forces in the stringers at these points can be obtained by multiplying by −1 the forces calculated:

$$X_F = -79.9084 \text{ pounds} \qquad X_G = -89.1049 \text{ pounds}$$
$$X_H = -0.1064 \text{ pound} \qquad X_J = +170.9411 \text{ pounds} \tag{19}$$

The forces correspond to a bending moment

$$M = 3077.7 \text{ inch-pounds} \tag{20a}$$

and a tensile force

$$P = 1.8214 \text{ pounds} \tag{20b}$$

Hence the rotation of the plane of ring FGHJ undertaken corresponds to the application of a considerable bending moment and a very small tensile force. The tensile force can be eliminated by a suitable axial translation of the plane of ring FGHJ.

The second part of the calculations consisted, therefore, of the determination of the distortions of the cylinder corresponding to an axial displacement of ring FGHJ amounting to −0.001 inch. The simultaneous linear equations were set up in the same manner as before, except that now the values

$$\xi_F = \xi_G = \xi_H = \xi_J = -1$$

were used. This new system of equations was solved by Doolittle's method. Those acquainted with the method will realize that this second solution involves comparatively little work if use is made of the solution of the first set. The results are:

$$\left.\begin{array}{lll}
\xi_A = -0.0993 & \xi_B = -0.5039 & \xi_C = -0.5803 \\
\xi_D = -0.5728 & \xi_E = -0.5725 & \xi_F = -1.0000 \\
\xi_G = 1.0000 & \xi_H = -1.0000 & \xi_J = -1.0000 \\
v_A = 2.4041 & & \\
u_B = 0.4899 & v_B = -0.4650 & w_B = -0.7013 \\
u_C = 0.0674 & v_C = -0.8912 & w_C = 0.3489 \\
u_D = 0.0611 & v_D = 0.1735 & w_D = -0.0900 \\
v_E = 0.2400 & & \\
u_F = 0.4055 & v_F = 0.3407 & w_F = -0.2371 \\
u_G = 0.3176 & v_G = 0.7220 & w_G = -0.1459 \\
u_H = -0.2376 & v_H = -0.0716 & w_H = 0.2123 \\
v_J = -0.4981 & &
\end{array}\right\} \quad (21)$$

The unit displacement is again 0.001 inch, and the unit rotation 0.001 radian.

Substitution of the values obtained into the equations corresponding to the sixth to ninth rows of the operations table gives the resultant forces acting upon the constraints at points F to J in the axial direction. The forces in the stringers at these points can be obtained by multiplying by −1 the forces calculated:

$$\begin{array}{ll}
X_F = -87.6409 \text{ pounds} & X_G = -126.0882 \text{ pounds} \\
X_H = -257.4269 \text{ pounds} & X_J = -171.9484 \text{ pounds}
\end{array} \quad (22)$$

These forces correspond to a resultant force

$$P = -643.1044 \text{ pounds} \tag{23a}$$

and a bending moment

$$M = -1.821 \times 10 \text{ inch-pounds} \tag{23b}$$

Obviously, the two solutions — namely, those corresponding to the pure rotation and the pure translation, respectively, of ring FGHJ — can be combined in such a manner as to represent the two loading cases of pure bending and pure compression. The solution may be obtained by solving in each case two simultaneous equations. Because of the great difference in the numerical values, however, it is quicker and just as accurate for practical purposes to correct for the effect of tension in the following manner in the loading case corresponding to bending:

The tensile force caused by the rotation is 1.8214 pounds.

The compressive force due to the translation is 643.1044 pounds.

A combination of the rotation undertaken with a translation of $1.8214/643.1044 = 0.00283$ units eliminates the tensile force and introduces an additive bending moment of less than one-hundredth of a percent of the original moment.

The final pattern of distortions is shown in figures 11 to 14.

In a similar manner, the loading case corresponding to pure compression can be dealt with. The displacements calculated for pure translation must be combined with those calculated for the pure rotation multiplied by the factor $18.21/3077.7 = 0.00593$.

The final pattern of distortions corresponding to pure compression is shown in figures 15 to 18.

## Calculation of the Stresses

The average normal stress in a segment of a stringer between two adjacent rings is equal to the difference between the axial displacements of the end points of the segment times Young's modulus of the material divided by the original length of the segment. The average stress was calculated from the displacement values obtained as shown in the preceding section. The values of the stress are plotted against the distance of the stringer from the horizontal axis of the cylinder in figures 19 to 22. The curves shown correspond to either a pure bending moment of 35,000 inch-pounds or to a pure compression of 1286 pounds. The former value was chosen in order to permit a comparison with experimental results.

Theory and experiment agree in obtaining a practically linear stress distribution over the major portion of both the complete and the cut sections. The straight lines, however, do not coincide. The reason for the discrepancy is the difference in the location of the centroids of the actual and the simplified monocoque cylinders. Deviations from the straight line occur in the neighborhood of the cutout. The nature and the magnitude of these deviations are practically the same in experiment and calculation.

The shear stress in a panel depends upon the displacements and rotations occuring at all the four corners of the panel. If in figure 23 point A is displaced axially through a distance $\xi_A$, the shear stress induced in the panel is

$$f_s = -(1/2)(G/L)\xi_A \tag{24a}$$

provided the positive sense of the shearing stress acting in the sheet is as shown in figure 23. It follows from equation (11a) and the sign convention adopted that the shear stress caused by a tangential displacement of an amount $u_A$ of point A is

$$f_s = \alpha_t(G/a)u_A \tag{24b}$$

Similarly the shear stress caused by a unit radial displacement $v_A$ of point A is

$$f_s = \alpha_r(G/a)v_A \tag{24c}$$

Finally a rotation $w_A$ of the ring section at A gives rise to a shearing stress

$$f_s = \alpha_n L(G/a)w_A \tag{24d}$$

Displacements and rotations at the other corners of the panel contribute similar quantities to the shear stress, but care must be taken to use the proper sign. The total shear stress is

$$f_s = (1/2)(G/L)(-\xi_A + \xi_B + \xi_C - \xi_D) + \alpha_t(G/a)(u_A+u_B-u_C-u_D)$$

$$+\alpha_r(G/a)(-v_A+v_B-v_C+v_D)+\alpha_n L(G/a)(w_A+w_B-w_C-w_D) \tag{24}$$

Substitution of the values of the constants and the displacement quantities yields the shear stress in any panel. Figures 24 and 25 contain shear stress distribution curves for pure bending and pure compression, respectively. A comparison of the calculated values with experimental ones is not well possible because of the limited number of measurements and because of the simplifying assumptions of the calculations. Experimental strain data are not available for the full section. In the cut section the average measured value in the panels adjacent to the cutout was 454 psi (fig. 36 of reference 6), while the calculated value was 40 psi. This latter, however, was obtained as a small difference of large quantities and is not reliable for this reason. Measurements in the full section were made in a cylinder having the large cutout. The results (see fig. 40 of reference 6) indicate considerably higher stresses in the panels of the full section than in those of the cut section near the cutout. Moreover, a change in the sign of the shear also was observed.

The calculation of the bending moments, shear forces, and tensile forces in the rings can be carried out according to the principles stated in reference 4. In the present case the maximum bending moment in the full ring at the edge of the cutout was found to be 2.64 inch-pounds when the loading of the cylinder was a bending moment of 35,000 inch-pounds. The moment diagram is shown in figure 26.

The 2.64-inch-pound bending moment is very insignificant as compared to the applied bending moment of 35,000 inch-pounds. Nevertheless, it causes high stresses because of the small moment of inertia of the ring section. The maximum stress is 2.64 X 850 = 2240 psi according to the Mc/I formula.

When the applied loading is a compressive force rather than a bending moment, the moments in the ring are found to be similar to those just discussed. For this reason the moment diagram is not shown.

## DEVELOPMENT OF A STEP-BY-STEP APPROXIMATION PROCEDURE

### Basic Considerations

The method of calculation of the stress distribution in a monocoque with a cutout presented in the first part of this report gave satisfactory results with a reasonable expenditure of work. It is felt, however, that with more complex structures - for instance, monocoques with nonsymmetric cutouts or monocoques with several cutouts - the operations table would become so large that its solution by the methods of matrix calculus might entail too much numerical work to be practicable. An effort is made in this part, therefore, to develop a procedure of step-by-step approximations suitable to cope with these complex problems.

In order to simplify the presentation, the structure shown in figure 27 is used in place of the actual monocoque cylinder. This structure will be referred to as the small cylinder. The vertical transverse plane of symmetry S-S is considered here as fixed in space and the points of the cylinder on the four rings are moved relative to this fixed section. However, end rings A-A and A'-A' are rigid and can only undergo rigid body displacements. Because of the double symmetry of structure and loading it suffices to list only the forces and moments caused at points contained in one-quarter of the cylinder.

In the actual calculations all four rings were first rotated as rigid bodies about their horizontal diameters. The amount and sign of rotation were defined by the stipulation that the intersection point of ring A-A with stringer 1 be displaced a distance of 0.003 inch, that of ring B-B with stringer 1 a distance of 0.001 inch, both in the

negative x-direction. The axis of rotation was the horizontal diameter of the ring. Rings A'-A' and B'-B' were rotated symmetrically. This distortion pattern corresponds to that prevailing in the complete cylinder (without the cutout) under the action of a pure bending moment, provided rings A-A and A'-A' also undergo a rigid body translation vertically downward. The necessary amount of translation was determined from the requirement that at each point along ring B-B the forces and moments caused by the displacements had to add up to zero force and moment resultants. In practice, only one component force or moment had to be balanced out at any single point, after which all the other points were found to be automatically in equilibrium.

As the next step the unbalanced forces and moments were calculated that arose in the structure of figure 27 when the displacements determined in the preceding paragraph for the complete cylinder were applied to the cut cylinder of figure 27. Because the loading did not involve shear forces, unbalances were found only in the x-direction and at points along the edges of the cutout.

It was anticipated that the distortion pattern would be influenced materially by the cutout only in the neighborhood of the cutout. Consequently, additional displacements would have to be undertaken only at the intersection points of stringers 7, 8, and 9 with ring B-B. This restriction materially decreased the amount of work involved in the solution of the problem. However, additional rigid body translations of the rings were necessary in order to insure that the axial forces would add up to a zero resultant across field B-B'.

The unbalances were eliminated by displacing points 7, 8, and 9 in the x-direction. The required displacements were found by solving a 4-by-4 matrix which included the equilibrium conditions in the x-direction at the three points, and the requirement of a zero resultant force in the x-direction in a transverse section across field B-B'. These displacements, of course, gave rise to unbalanced tangential and radial forces and to moments in the plane of ring B-B. The unbalances were eliminated by undertaking suitable tangential and radial displacements and rotations at points 7 and 8 of ring B-B, and a suitable radial displacement at point 9. Because of the symmetry point 9 could not undergo any rotation or tangential displacement. The magnitudes of the displacements were determined by solving a 7-by-7 matrix.

The displacements required for balancing the forces and moments in the plane of ring B–B threw back unbalances into the x-direction. They were again eliminated by displacing points 7, 8, and 9 in the x-direction and undertaking a suitable amount of rigid body translation of ring B–B in the x-direction. After this, it was again found necessary to balance the plane of ring B–B as before. The displacements needed for this last balancing caused insignificant unbalances (about 1/2 of 1 percent) in the x-direction.

After all these displacements were undertaken, points 7, 8, and 9 could be considered to be in equilibrium for practical purposes. However, a check calculation showed that point 6 was considerably out of balance in the plane of ring B–B. Hence point 6 was now moved and the unbalances thrown back by these motions upon point 7 were balanced by moving points 7, 8, and 9 once more in the plane of ring B–B. Again sizable residuals were found to exist at point 6. The motions of point 6 required for balancing the forces and moments at point 6 caused relatively large unbalances at point 7. It was found that the convergence of the procedure could be accelerated by moving points 6 and 7 now simultaneously. After this step all the unbalances had values which could be considered as negligible. The establishment of a check table, however, showed that the resultant force quantities $X_{AB}$, $X_{BB'}$, and $\frac{M_{AB} - M_{BB'}}{r}$ as well as the residuals at point 5, were too large. A few additional motions sufficed for reducing these quantities to permissible values.

## Numerical Calculation of the Equilibrium of the Small Cylinder

The complete operations table is presented as table 2. Because of its large size it is shown symbolically, and the symbols are explained in table 3. Symbols P, Q, R, and S have two values each, one corresponding to the complete cylinder (no cutout) and the other to the cylinder with the cutout. It is noted that the effective width of sheet attached to stringer 8 is reduced when the sheet in the panel between stringers 8 and 9 is cut out. The entries in the table were calculated according to the principles discussed in the first part of this report.

Individual displacements of the points situated along ring A–A are assumed in spite of the fact that the ring has to be considered as a rigid body. In the establishment of the operations table symmetric motions of the entire system were considered throughout. Consequently, whenever the nth point of ring B–B is moved through a unit distance, say in the tangential direction, point n' of ring B–B, point n of ring B'–B', and point n' of ring B'–B' also are moved simultaneously likewise. The effect of these simultaneous motions was duly considered when the operations table was established. The effect is noticeable in the entries referring to stringers 2 and 8. The points on ring B–B also are affected. The unit displacement is 0.001 inch and the unit rotation is 0.001 radian.

Similarly, whenever a point on ring A–A is displaced, the three points symmetrically situated to it are also displaced. A motion of a point on ring A'–A', however, has no effect upon the forces listed in table 2. On the other hand, the displacement of a point on ring A–A and stringers 2' and 8' influences the entries in rows 2 and 8 in table 2, as may be seen from the numerical values given in table 3.

Table 4 lists the forces and moments caused by rigid body displacements. A rigid body displacement is defined as a set of displacements of a number of points during which the distances between the points do not change. The effect of a rigid body displacement can always be calculated as the sum of the effect of the individual displacements that constitute the rigid body displacement. In table 4 all values are listed for the complete cylinder (no cutout). The rows marked $\omega_{AA}$ contain the forces and moments caused by a rigid body rotation of ring A–A, the rows marked $\omega_{BB}$ those caused by a rigid body rotation of ring B–B, and the rows marked $\eta_{AA}$ those caused by a vertical downward translation of ring BB. The magnitudes of these motions are so defined that the displacement of point A1 is −0.003 inch in the x-direction for the rows marked $\omega_{AA}$ and the displacement of point $B_1$ is −0.001 inch for the rows marked $\omega_{BB}$. In both cases the horizontal diameter of the ring is the axis of rotation. In the downward translation corresponding to the rows marked $\eta_{AA}$ the displacement is 0.001283 inch. It is noted that a vertical downward displacement $\eta$ of the intersection point of a stringer with a ring defined by

an angle $\varphi$ measured from the vertical direction as shown in figure 27 can be considered as the sum of a tangential displacement of $\eta \sin\varphi$ and a radial displacement of $\eta \cos\varphi$. The sum total of all the rigid body displacements listed is a group operation which gives vanishing residual forces and moments throughout except for the forces acting on ring A-A in the x-direction. The latter add up to a pure couple of 49,000 inch-pounds about a horizontal transverse axis.

In some instances consideration of all the displacements simultaneously reduces the work of computation. For instance, in the case of a rigid body displacement of a ring in the x-direction it is self-evident that no shear will arise in the panels. The only forces caused by such a displacement are due to the shortening of the stringers.

The displacements contained in table 4 constitute the solution of the problem of bending of the cylinder not having a cutout. Since it is anticipated that the effect of the cutout will be restricted to the immediate neighborhood of the cutout, in the balancing procedure to follow only a portion of the operations table will be used. This portion is presented as table 5. It contains only the displacements of points 7, 8, and 9 and four rigid body translations of the rings, all related to the cylinder with the cutout.

The upper-left 10-by-10 corner of the operations table is identical with the corresponding portion of table 2:

M L

N P Q

R S

The eleventh row represents a rigid body translation in the x-direction of ring A-A. The eleventh column contains the contributions of the individual and group displacements to the resultant axial force acting in a complete transverse section of field A-B. Similarly, row 12 corresponds to a rigid body x-translation of ring B-B (combined with a simultaneous symmetric translation of ring B'-B'), and column 12 contains the resultant x-forces in a transverse section of field B-B'. Row 13 contains the forces and moments caused by a rigid body rotation of ring B-B about its horizontal

diameter such that $\xi = -0.001$ inch for the intersection point of stringer 1 with ring B–B. Simultaneously, of course, ring B'–B' is also rotated symmetrically. In column 13 are listed the contributions of the individual and group operations to the expression $(M_{AB} - M_{BB'})/r$ where $M_{AB}$ is the moment about the horizontal diameter of the cylinder in a transverse section through field A–B, $M_{BB}$ the corresponding quantity in field B–B', and r is the radius of the cylinder. Finally the last row represents a rigid body vertical downward displacement of ring AA. (Of course ring A'–A' must also be displaced simultaneously, but this displacement will not have any effect upon the quantities listed in the operations table.) The magnitude of the translation is such that the radial displacement v of the intersection point of stringer 1 with ring A–A is +0.001 inch. The last column contains the contributions of the individual and group displacements to the vertical shear force resultant acting on ring A–A.

On the assumption that the displacements calculated in table 4 for the complete cylinder represent in first approximation the displacements of the cylinder with the cutout, the values are substituted in the operations table of the cylinder with the cutout. The only unbalances corresponding to these displacements occur at points B8 and B9 in the x-direction, because the displacement pattern of table 4 does not contain shearing deformations in field BB'. The unbalances are

$$X_{B8} = 71.17 \text{ pounds} \qquad X_{B9} = 613.32 \text{ pounds} \tag{25}$$

Corresponding to these values the sum of the axial forces in a section through field B–B' is not zero but

$$X_{BB'} = 755.67 \text{ pounds} \tag{26}$$

and the difference in the moments in the sections through fields AB and BB' is (divided by the radius of the cylinder)

$$(M_{AB} - M_{BB'})/r = 744.8 \text{ inch-pounds} \tag{27}$$

Points B7, B8, and B9 are now balanced, and the axial force resultant in field B–B' is reduced to zero by suitable x-displacements of points B7, B8, and B9, and by suitable

rigid body translations of rings BB and AA in the x-direction. The upper left 3-by-3 corner of the matrix shown in table 6 contains the axial forces caused by the axial displacements of the three points in question. The fourth row gives the axial forces caused by a unit axial rigid body x-translation of ring B-B combined with an axial translation of ring A-A through a distance of three units in the x-direction. Ring A-A has to be moved in order to insure that points B1 to B6 be not thrown out of balance because of the rigid body translation of ring B-B. The combined operation thus defined is denoted as $\xi$ group. It may be seen that all the figures in table 6 either are taken directly from table 5, or are combinations of values listed in table 5.

In order to balance the x-residuals obtained, the set of equations represented by the matrix of table 6 and the right-hand side members given in equations (25) and (26) are solved by the matrix method. The results are

$$\xi_7 = 0.0253 \qquad \xi_8 = 0.12816 \qquad \xi_9 = 1.9190 \qquad \xi_{group} = 0.07 \tag{28}$$

The values are given in 1/1000 inch as usual.

Substitution of the above displacement values into part of table 5 gives the residual forces and moments acting in the plane of ring B-B at the location of stringers 7, 8, and 9. (The residuals in the x-direction were balanced out in the preceding step of the calculations.) The new residuals are:

$$\begin{aligned} T_{B7} &= -0.480 \text{ pound} & R_{B9} &= 3.352 \text{ pounds} \\ T_{B8} &= -21.868 \text{ pounds} & N_{B7} &= -0.03717 \text{ inch-pound} \\ R_{B7} &= -0.07256 \text{ pound} & N_{B8} &= -0.5487 \text{ inch-pound} \\ R_{B8} &= -1.5798 \text{ pounds} \end{aligned} \tag{29}$$

To eliminate the unbalances listed in equations (29) the seven equations represented by the matrix of table 7 (which is just another part of table 5) together with the right-hand members given in equations (29) are solved by the matrix method. The solution is:

$$u_{B7} = 0.079 \qquad v_{B7} = -0.850 \qquad w_{B7} = -1.429$$

$$u_{B8} = -1.079 \qquad v_{B8} = -2.602 \qquad w_{B8} = 1.904 \qquad (30)$$

$$v_{B9} = 6.68$$

When these displacements and rotations are undertaken, the forces and moments acting in the plane of ring B-B are in equilibrium at points B7, B8, and B9. However, the equilibrium of the forces acting at these points in the x-direction has been disturbed. The unbalances thrown back in the x-direction are calculated again from table 5. They are

$$X_{B7} = -11.06 \text{ pounds} \quad X_{B8} = -10.85 \text{ pounds} \quad X_{B9} = 41.187 \text{ pounds} \qquad (31)$$

No unbalanced axial force results in a transverse section of field BB'. The residuals are small as compared to the original ones. Nevertheless, they are eliminated by using once more the matrix of table 6. The necessary displacements are

$$\left.\begin{array}{ll} \xi_{B7} = -0.01174 & \xi_{B9} = 0.1232 \\ \xi_{B8} = -0.009684 & \xi_{group} = 0.00274 \end{array}\right\} \qquad (32)$$

After these axial displacements were undertaken, the unbalances in the plane of the ring are:

$$T_{B7} = 0.222 \qquad R_{B7} = -0.006 \qquad N_{B7} = 0.0188$$

$$T_{B8} = -1.604 \qquad R_{B8} = -0.062 \qquad N_{B8} = -0.054 \qquad (33)$$

$$R_{B9} = 0.371$$

Use of the matrix of table 7 gives the following displacements and rotations:

$$u_{B7} = 0.010 \qquad v_{B7} = -0.0637 \qquad w_{B7} = -0.121$$

$$u_{B8} = -0.0844 \qquad v_{B8} = -0.213 \qquad w_{B8} = 0.144 \qquad (34)$$

$$v_{B9} = 0.553$$

The axial unbalances caused by these distortions are negligibly small.

Substitution of all the preceding displacement values into the operations table (table 5) reveals that a difference now exists between the moments transmitted through fields A–B and B–B':

$$(M_{AB} - M_{BB'})/r = -28.78 \text{ inch-pounds per inch} \tag{35}$$

This can be eliminated by rotating ring B–B through an angle (in 1/10,000 rad)

$$\omega_{BB} = -0.005 \tag{36}$$

The unbalances caused at the different points by this rotation are found to be negligibly small.

Points B7, B8, and B9 can now be considered as completely balanced. Substitution of the displacement values corresponding to all the individual displacements of point B7 into that portion of table 5 which represents the interlinkage between points B6 and B7 shows that point B6 is out of balance. The unbalances are

$$X_{B6} = 2.082 \text{ pounds}$$

$$T_{B6} = 3.01 \text{ pounds} \quad R_{B6} = 1.123 \text{ pounds} \quad N_{B6} = 0.893 \text{ inch-pound} \tag{37}$$

The residual forces and moment listed in equations (37), together with the matrix of table 8, constitute a system of four linear equations which permits the calculation of the four displacements of point B6 necessary to balance out the residuals. The displacements are

$$\xi_{B6} = 0.002582$$

$$u_{B6} = -0.01287 \qquad v_{B6} = 0.20924 \qquad w_{B6} = 0.28929 \tag{38}$$

These displacements, while balancing point B6, throw unbalances upon points B5 and B7. The former were not recorded: the latter follow:

$$\left.\begin{array}{ll} T_{B7} = 4.1868 \text{ pounds} & R_{B7} = -0.9831 \text{ pound} \\ X_{B7} = -0.0826 \text{ pound} & N_{B7} = 0.3509 \text{ inch-pound} \end{array}\right\} \quad (39)$$

The three quantities pertaining to the plane of the ring are now balanced out using the matrix of table 7. The displacements obtained are:

$$\left.\begin{array}{lll} u_{B7} = 0.03607 & v_{B7} = -0.23349 & w_{B7} = -0.11682 \\ u_{B8} = -0.02859 & v_{B8} = 0.01284 & w_{B8} = 0.07393 \\ & v_{B9} = 0.08032 & \end{array}\right\} \quad (40)$$

The unbalances caused at B6 by the above-listed displacements of B7 are:

$$\left.\begin{array}{ll} T_{B6} = 3.778 \text{ pounds} & R_{B6} = 0.812 \text{ pound} \\ X_{B6} = 0.601 \text{ pound} & N_{B6} = 0.522 \text{ inch-pound} \end{array}\right\} \quad (41)$$

These residuals are again eliminated with the aid of table 8. The following displacements are obtained:

$$\left.\begin{array}{lll} & \xi_{B6} = 0.00092 & \\ u_{B6} = 0.02233 & v_{B6} = -0.15102 & w_{B6} = 0.03928 \end{array}\right\} \quad (42)$$

The effect of these motions on point 7 is found to be:

$$\left.\begin{array}{lll} & X_{B7} = -0.3932 & \\ T_{B7} = 3.33 & R_{B7} = -0.6636 & N_{B6} = 0.402 \end{array}\right\} \quad (43)$$

Comparison with the values shown in equation (39) indicates that this process is very slowly convergent, if at all. A rapid elimination of the residuals at both points 6 and 7 can be had only by moving both these points at the same time. The motions undertaken are:

$$\left.\begin{array}{ll} u_{B6} = 0.012 & u_{B7} = 0.019 \\ v_{B6} = 0.11 & v_{B7} = -0.17 \\ w_{B6} = 0.03 & w_{B7} = 0.08 \end{array}\right\} \quad (44)$$

At this stage of the relaxations all the remaining unbalances on points 6, 7, 8, and 9 are considered as negligibly small. A check table is set up and is presented as table 9. It indicates that point 5 is out of balance.

The check table also shows unbalances for $X_{AB}$, $X_{BB'}$, and $(M_{AB} - M_{BB'})/r$. These residuals probably are due to some errors in the numerical calculations. All the residuals are reduced to negligibly small quantities by additional operations contained in table 9.

Figures 28, 29, and 30 contain the axial stress, the bending stress, and the shear stress distributions, respectively, in the small cylinder as calculated from all the displacements determined in this section.

## NUMERICAL CALCULATION OF THE EQUILIBRIUM OF THE LARGE CYLINDER

It was hoped that application of the procedure just shown would result in establishing the equilibrium of the large cylinder in a reasonable number of steps. This anticipation, however, was not fulfilled and the calculations became so time consuming that they cannot be recommended for routine work, although the results obtained were in good agreement with experiment.

The system of designating the individual points is shown in figure 31. As may be seen, the "large" cylinder is just a non-simplified version of the same cylinder that was calculated by the matrix method in the first part of this report. Only one-quarter of it need be considered because of the symmetry. This quarter contains one rigid and three non-rigid half-rings (one of the latter is cut) with altogether 35 points which have a total of 97 degrees of freedom of motion.

The operations table is represented symbolically in table 10. The squares denoted by 1, 2, and 3 are identical with the squares that are similarly situated in table 2. Table 11 contains the square designated 4, and table 12 those denoted by 5, 6, 7, and 8. Symbols A to Z in these tables have the same meanings as before (see table 3), and the symbols a to u are explained in table 13.

The principle used in solving this operations table was the same as that discussed in connection with the small cylinder. First rigid body displacements were undertaken with all the eight rings in order to find the solution for the complete cylinder (no cutout). This involved rotations of rings D–D, C–C, B–B, and A–A in the ratios 1:3:5:7, and vertical downward translations of the last three in the ratios 1:3.02:6.01. Next the displacements obtained were substituted in the operations table for the cylinder with the cutout and the unbalances were calculated. These were then balanced out by solving the matrix of all the x-displacements considering only points 6 to 9 on rings B–B and C–C, and 5 to 8 on ring D–D. The displacements undertaken caused unbalances to arise in the planes of the three rings. Three matrices were set up to take care of the forces and moments in the plane of each ring individually. The unbalances in the plane of one of the rings were eliminated first by solving the corresponding matrix. The unbalances caused by these displacements in the plane of the next ring, together with the original unbalances there, were then balanced by solving the corresponding matrix, and so on. Because of the unexpectedly strong interaction between the rings the matrices had to be solved many times before the unbalances were reduced in all the rings simultaneously. The displacements undertaken in the planes of the rings during this balancing procedure three unbalances back in the x-direction which necessitated a repetition of the entire procedure.

At the beginning, the unbalances in the x-direction decreased after each complete balancing in the plane of the rings but later they began to increase gradually. At the same time, the displacements in the neighborhood of the cutout increased steadily and tended to attain unexpectedly large values. Consequently, the procedure adopted was found to be divergent. It is possible, however, that the divergence was caused either partially or wholly by a slight error in the operations table.

It was also observed that point D8 underwent large outward displacements (in the negative r direction) while in the solution of the simplified structure in the first part of this report the displacement of the corresponding point was small and inward. Because of this the displacement pattern of the rings was arbitrarily changed to conform better with that found in the case of the simplified structure. The procedure of balancing was then continued as before and was found to converge, though slowly. It might be mentioned that in the tests described in reference 6 both inward and outward deflections were observed.

At suitable stages of the procedure again some additional points (B5, C5, C4, and D4) had to be displaced in order to reduce the residuals all over the structure to negligibly small quantities. The final displacements obtained are listed in table 14, and the final residual forces and moments in table 15. The stresses calculated from the displacements are shown in figures 19, 20, 24, and 26.

It may be seen from figures 19 and 20 that the axial stress distribution is very much the same in the solutions corresponding to the simplified cylinder and the large cylinder. The straight-line portions of the diagrams are practically parallel although not coincident. The reason for the shift is that the location of the centroid of the cross section of the simplified cylinder is not the same as that of the large, and consequently also the actual, cylinder. It can be anticipated, therefore, that the agreement is better between the experimental curves and the theoretical curves calculated for the large cylinder than between the experimental curves and the theoretical curves calculated for the simplified cylinder. This is borne out by figures 19 and 20. Altogether the agreement between theory and experiment is good.

In the shear curves of figure 24 and the bending moment curves of figure 26 the agreement is good between values calculated for the complete portion of the cylinder on the basis of the simplified and the large cylinders. Considerable deviations occur in the cut field. This could be expected since the simplifying assumptions changed the mechanical conditions in this region.

## A SIMPLIFIED APPROXIMATE SOLUTION

The problem can be simplified radically by assuming that the rings are infinitely rigid in their planes and by establishing the equilibrium of the x-forces only. This proposition was worked out on the basis of the operations table of table 1. The elements related to the equilibrium of the axial forces are contained in the upper-left 9-by-9 corner of the operations table.

The equations corresponding to the assumed rotation of the rigid end ring were solved by the matrix method. The displacements of points A, B, C, D, and E were found to be

$$\left.\begin{array}{lll} \xi_A = -0.1482 & \xi_B = -0.4340 & \xi_C = -0.3799 \\ \xi_D = -0.0060 & \xi_E = 0.5488 & \end{array}\right\} \quad (45)$$

The axial stresses were calculated from these displacements. They are shown in figures 32 and 33 together with the curves of axial stress calculated in the first part of this report. The agreement was found to be excellent between the present approximate solution and the exact solution of the problem of the simplified cylinder. Of course, the approximate solution does not give any useful data for the calculation of the bending moments in the rings and the shear stresses in the sheet covering.

## CONCLUSIONS

The stress distribution caused by a pure bending moment in a cylindrical reinforced monocoque cylinder having a symmetric cutout was investigated by several methods of calculation. The results were compared with data obtained in experiments described in reference 6. The main conclusions follow:

1. The operations table of the problem as defined in the Southwell method can be set up easily if use is made of the formulas contained in figures 7 to 10.

2. The set of simultaneous linear equations represented by the operations table can be solved by the matrix method as shown in reference 4 if the number of unknowns is not too great. (The 30-by-30 matrix shown in table 1 can be solved in from 1 to 4 days depending upon the operator and the calculating machine.)

3. The calculated axial stresses are in good agreement with the experimental data presented in reference 6. (See figs. 19 and 20.) The difference in the location of the neutral axes corresponding to test and calculation (the latter labeled simplified cylinder) is due to the fact that the location of the centroid of the actual structure differs from that of the simplified structure.

4. The step-by-step procedure developed in the second part for solving the operations table of the so-called large cylinder (table 10) was slowly convergent and is not recommended in its present form for practical use. The results obtained by it for the axial stresses are in good agreement with test results. (See figs. 19 and 20.)

5. Experimental values for the shear stress in the cylinder shown in figure 1 were available only in the cut section. They do not compare favorably with the calculated values. However, the experimental values are not considered reliable as stated in reference 6.

Polytechnic Institute of Brooklyn,
Brooklyn, N. Y., July 1945.

## REFERENCES

1. Southwell, R. V.: Relaxation Methods in Engineering Science, A Treatise on Approximate Computation. Clarendon Press (Oxford), 1940.

2. Hoff, N. J., Levy, Robert S., and Kempner, Joseph: Numerical Procedures for the Calculation of the Stresses in Monocoques. I – Diffusion of Tensile Stringer Loads in Reinforced Panels. NACA TN No. 934, 1944.

3. Hoff, N. J., and Kempner, Joseph: Numerical Procedures for the Calculation of the Stresses in Monocoques. II – Diffusion of Tensile Stringer Loads in Reinforced Flat Panels with Cutouts. NACA TN No. 950, 1944.

4. Hoff, N. J., Libby, Paul A., and Klein, Bertram: Numerical Procedures for the Calculation of the Stresses in Monocoques. III – Calculation of the Bending Moments in Fuselage Frames. NACA TN No. 998, 1946.

5. Hoff, N. J., Klein, Bertram, and Libby, Paul A.: Numerical Procedures for the Calculation of the Stresses in Monocoques. IV – Influence Coefficients of Curved Bars for Distortions in their own Plane. NACA TN No. 999, 1946.

6. Hoff, N. J., and Boley, Bruno A.: Stresses in and General Instability of Monocoque Cylinders with Cutouts. I – Experimental Investigation of Cylinders with a Symmetric Cutout Subjected to Pure Bending. NACA TN No. 1013, 1946.

7. Doolittle, M. H.: Method Employed in the Solution of Normal Equations and the Adjustment of a Triangulum. U. S. Coast and Geodetic Survey Rep. 1878, pp. 115–120.

8. Dwyer, Paul S.: Doolittle Technique, Annals of Mathematical Statistics. vol. XII, no. 4, Dec. 1941, pp. 449–458.

# APPENDIX

To show how figures 7 to 10a representing the four panel problem may be put to use in setting up the operations table, two numerical examples are worked out. First, use is made of figure 7 to determine the forces and moments introduced at the constraints when point B of the simplified structure is displaced axially through a positive unit distance of 0.001 inch. The following data are needed in the calculations:

$$\left.\begin{aligned}
&E_{str} = 10.3 \times 10^6 \text{ psi} \\
&A_{strDF} = A_{strFH} = 0.1877 \text{ in.}^2 \\
&a_{II,IV} = 12.86 \text{ in.} \\
&a_{I,III} = 9.64 \text{ in.} \\
&L_{I,II} = L_{III,IV} = 3.927 \text{ in.} \\
&G_{II} = G_{III} = G_{IV} = 0.385\, E_{str} = 3.97 \times 10^6 \text{ psi} \\
&G_I = 0 \\
&t_{II} = t_{III} = t_{IV} = 0.012 \text{ in.} \\
&(Gt)\xi = 47.64 \text{ lb.}
\end{aligned}\right\} \quad (1a)$$

The values of the coefficients $\alpha$ were calculated from the simplified formulas suggested in the conclusion of reference 5. They were checked by the values taken from figures 86 to 93 of reference 5 for the smallest and largest values of $\xi$ and $\gamma$, respectively. All calculations were carried out by slide rule. The results are:

$$\left.\begin{aligned}(\alpha_t)_{I,II} &= (\alpha_t)_{III,IV} = -0.499\\ (\alpha_r)_{I,II} &= (\alpha_r)_{III,IV} = 0.039\\ (\alpha_n)_{I,II} &= (\alpha_n)_{III,IV} = -0.0033\end{aligned}\right\} \quad (1b)$$

For A the forces and moments acting upon the constraints then become, according to figures 7 and 10a:

$$\left.\begin{aligned}X_A &= (47.64)(12.86)/(4)(3.927) = 38.9 \text{ lb}\\ T_A &= -(0.499/2)\ 47.64 = -11.9 \text{ lb}\\ R_A &= -(0.039/2)\ 47.64 = -0.934 \text{ lb}\\ N_A &= -(0.0033/2)(47.64)(3.927) = -0.305 \text{ in.-lb}\end{aligned}\right\} \quad (2a)$$

At B the motion causes:

$$\left.\begin{aligned}X_B &= -10.3 \times 10^3(0.1877)[(1/12.86)+(1/9.64)]\\ &\quad +(47.64)[2(12.86)+9.64+1/(4)(3.927)] = -433 \text{ lb}\\ T_B &= -(0.499/2)47.64 = -11.9 \text{ lb}\\ R_B &= (0.039/2)\ 47.64 = 0.934 \text{ lb}\\ N_B &= -(0.0033/2)(47.64)(3.927) = -0.305 \text{ in.-lb}\end{aligned}\right\} \quad (2b)$$

At point C there results:

$$X_C = (47.64)(12.86 + 9.64)/(4)(3.927) = 68.1 \text{ lb}$$

$$T_C = R_C = N_C = 0 \quad (2c)$$

For F and G the values are:

$$X_F = [10.3 \times 10^3(0.1877)/(9.64)] - (47.64)(9.64)[1/(4)(3.927)]$$

$$= 146.8 \text{ lb.}$$

$$X_G = (47.64)(9.64)/(4)(3.927) = 29.2 \text{ lb}$$

$$T_F = T_G = 11.9 \text{ lb}$$

$$R_F = -R_G = 0.934 \text{ lb} \tag{2d}$$

$$N_F = R_G = 0.305 \text{ in.-lb}$$

To illustrate further the use of figures 7 to 10a, the effect of a tangential displacement of point G through a unit distance of 0.001 in. is investigated with the aid of figure 8.

In the course of finding the ring influence coefficients needed in the calculations, the ratios

$$(EI)_R/L, \quad (EI)_R/L^2, \quad (EI)_R/L^3$$

have to be determined. The moment of inertia of the ring plus its effective sheet is found to be $8.05 \times 10^{-5}$ in.$^4$; $L_{I,II}$ is 3.927 in. for arc FG; and $L_{III,IV} = 7.854$ in. for ring segment GH.

Further, convenient values of the parameters $\gamma$ and $\xi$ have to be assumed before use can be made of figures 14 to 31 for the movable end influence coefficients and figures 50 to 67 for the fixed end influence coefficients, or tables III and IV, all of reference 5. The values $\gamma = 10{,}000$ and $\xi = 0.25$ were found to be the closest choice for the given ring elements. For FG, which subtends an angle of 22.5°, the graphs were used; for GH the necessary data were taken from the tables. The final results are:

For arc FG:

$$\left.\begin{array}{ll}
\widehat{nn}_M = 1.539 & \widehat{nn}_F = 0.2853 \\
\widehat{nr}_M = -1.378 & \widehat{nr}_F = -0.792 \\
\widehat{nt}_M = 5.38 & \widehat{nt}_F = 5.54 \\
\widehat{rr}_M = 1.777 & \widehat{rr}_F = 1.461 \\
\widehat{tr}_M = -7.95 & \widehat{tr}_F = -8.10 \\
\widehat{tt}_M = 41 & \widehat{tt}_F = 41.4
\end{array}\right\} \quad (3a)$$

For arc GH:

$$\left.\begin{array}{ll}
\widehat{nn}_M = 0.874 & \widehat{nn}_F = 0.2562 \\
\widehat{nr}_M = -0.423 & \widehat{nr}_F = -0.273 \\
\widehat{nt}_M = 0.81 & \widehat{nt}_F = 0.871 \\
\widehat{rr}_M = 0.281 & \widehat{rr}_F = 0.2445 \\
\widehat{tr}_M = -0.6275 & \widehat{tr}_F = -0.641 \\
\widehat{tt}_M = 1.538 & \widehat{tt}_F = 1.530
\end{array}\right\} \quad (3b)$$

These values correspond to a unit displacement of 0.001 in. or a unit rotation of 0.001 rad.

When point G is moved, $G_I$ and $G_{IV}$ must be set equal to zero since panels I and IV according to the notation of figure 8 of this report are cut out. The parameters $\alpha_t$, $\alpha_r$, $\alpha_n$ for arc FG are identical with those listed in equation (1b). Those for arc GH were derived in analogous manner and are:

$$\left.\begin{aligned} \alpha_{t_{III,IV}} &= -0.490 \\ \alpha_{r_{III,IV}} &= 0.079 \\ \alpha_{n_{III,IV}} &= -0.0065 \end{aligned}\right\} \qquad (3c)$$

The remaining geometric and mechanical properties occurring in the calculations are identical with those given by equation (1a).

The forces and moments arising at the constraints when point G is moved tangentially through the unit distance can now be written down.

$$\left.\begin{aligned} X_B &= (0.499/2)\ 47.64 &&= 11.9 \text{ lb} \\ T_B &= (0.499)^2(47.64)(3.927)/9.64 &&= 4.85 \text{ lb} \\ R_B &= (0.039)(0.499)(47.64)(3.927)/9.64 &&= 0.378 \text{ lb} \\ N_B &= (0.0033)(0.499)(47.64)(3.927)^2/9.64 &&= 0.126 \text{ in.-lb} \end{aligned}\right\} (4a)$$

$$\left.\begin{aligned} X_C &= -(47.64)(0.499 - 0.490)/2 &&= -0.1 \text{ lb} \\ T_C &= 47.64[(0.499)^2(3.927)+(0.490)^2(7.854)]/9.64 &&= 14.16 \text{ lb} \\ R_C &= 47.64[(0.490)(0.079)(7.854)-(0.499)(0.039)(3.927)]/9.64 \\ &= 1.126 \text{ lb} \\ N_C &= 47.64[0.490)(0.0065)(7.854)^2+(0.499)(0.0033)(3.927)]/9.64 \\ &= 1.099 \text{ in.-lb} \end{aligned}\right\} (4b)$$

$$\left.\begin{aligned}
X_D &= -(0.490/2)\ 47.64 &&= -11.8\ \text{lb}\\
T_D &= (0.490)^2(47.64)(7.854)/9.64 &&= 9.31\ \text{lb}\\
R_D &= -(0.079)(0.490)(47.64)(7.854)/9.64 &&= -1.504\ \text{lb}\\
N_D &= (0.0065)(0.490)(47.64)(7.854)^2/9.64 &&= 0.973\ \text{in.-lb}
\end{aligned}\right\}\quad (4c)$$

$$\left.\begin{aligned}
X_F &= X_B = 11.9\ \text{lb}\\
T_F &= 41.4 - T_B = 36.55\ \text{lb}\\
R_F &= 8.10 - R_B = 7.722\ \text{lb}\\
N_F &= 5.54 - N_B = 5.414\ \text{in.-lb}
\end{aligned}\right\}\quad (4d)$$

$$\left.\begin{aligned}
X_G &= X_C = -0.1\ \text{lb}\\
T_G &= -41 - 1.538 - T_c = -56.698\ \text{lb}\\
R_G &= 7.95 - 0.6275 - R_c = 6.1965\ \text{lb}\\
N_G &= -5.38 - 0.81 - N_c = -7.289\ \text{in.-lb}
\end{aligned}\right\}\quad (4e)$$

$$\left.\begin{aligned}
X_H &= X_O = -11.8\ \text{lb}\\
T_H &= 1.530 - T_D = -7.78\ \text{lb}\\
R_H &= -0.641 - R_D = 0.863\ \text{lb}\\
N_H &= 0.871 - N_D = -0.102\ \text{in.-lb}
\end{aligned}\right\}\quad (4f)$$

| | $\xi_A$ | $\xi_B$ | $\xi_C$ | $\xi_D$ | $\xi_E$ | $\xi_F$ | $\xi_G$ | $\xi_H$ | $\xi_J$ | $v_A$ | $u_B$ | $v_B$ | $w_B$ | $u_C$ | $v_C$ | $w_C$ | $u_D$ | $v_D$ | $w_D$ | $v_E$ | $u_F$ | $v_F$ | $w_F$ | $u_G$ | $v_G$ | $w_G$ | $u_H$ | $v_H$ | $w_H$ | $v_J$ |
|---|---|---|---|---|---|---|---|---|---|---|---|---|---|---|---|---|---|---|---|---|---|---|---|---|---|---|---|---|---|---|
| $X_A$ | 113.9 | 38.9 | | | | | | | | .934 | 11.9 | .934 | .305 | | | | | | | | | | | | | | | | | |
| $X_B$ | 38.9 | 433 | 68.1 | | | 146.8 | 29.2 | | | .934 | 11.9 | .934 | .305 | | | | | | | | 11.9 | .934 | .305 | 11.9 | .934 | .305 | | | | |
| $X_C$ | | 68.1 | 628.1 | 34 | | 29.2 | 257.2 | 14.6 | | | | | | | | | | | | | 11.9 | .934 | .305 | .1 | 2.804 | .925 | 11.8 | 1.87 | 1.23 | |
| $X_D$ | | | 34 | 1104 | 17 | | 14.6 | 581.1 | 7.3 | | | | | | | | | | | | | | | 11.8 | 1.87 | 1.23 | .1 | 5.65 | 3.82 | 3.78 |
| $X_E$ | | | | 17 | 719 | | | 7.3 | 394.7 | | | | | | | | | | | | | | | | | | 11.7 | 3.78 | 5.05 | 3.78 |
| $X_F$ | | 146.8 | 29.2 | | | 205.2 | 29.2 | | | | 11.9 | .934 | .305 | 11.9 | .934 | .305 | | | | | 11.9 | .934 | .305 | 11.9 | .934 | .305 | | | | |
| $X_G$ | | 29.2 | 257.2 | 14.6 | | 29.2 | 344.8 | 14.6 | | | 11.9 | .934 | .305 | .1 | 2.804 | .925 | 11.8 | 1.87 | 1.23 | | 11.9 | .934 | .305 | .1 | 2.804 | .925 | 11.8 | 1.87 | 1.23 | |
| $X_H$ | | | 14.6 | 581.1 | 7.3 | | 14.6 | 624.9 | 7.3 | | | | | 11.8 | 1.87 | 1.23 | .1 | 5.65 | 3.82 | 3.78 | | | | 11.8 | 1.87 | 1.23 | .1 | 5.65 | 3.82 | 3.78 |
| $X_J$ | | | | 7.3 | 394.7 | | | 7.3 | 409.3 | | | | | | | | 11.7 | 3.78 | 5.05 | 3.78 | | | | | | | 11.7 | 3.78 | 5.05 | 3.78 |
| $R_A$ | .934 | .934 | | | | | | | | 1.7992 | 7.816 | 14388 | .7846 | | | | | | | | | | | | | | | | | |
| $T_B$ | 11.9 | 11.9 | | | | 11.9 | 11.9 | | | 7.816 | 94.13 | .378 | 11.0752 | 32.91 | 7.4388 | 5.3194 | | | | | 4.85 | .378 | 1.126 | 4.85 | .378 | 1.26 | | | | |
| $R_B$ | .934 | .934 | | | | .934 | .934 | | | 1.4388 | .378 | 3.6279 | .00985 | 7.438 | 1.4093 | .77476 | | | | | .378 | .0295 | .00985 | .378 | .0295 | .00985 | | | | |
| $N_B$ | .305 | .305 | | | | .305 | .305 | | | .7846 | 11.0752 | .00985 | 3.0862 | 5.3194 | .77476 | .27956 | | | | | .126 | .00985 | .003276 | .126 | .00985 | .003276 | | | | |
| $T_C$ | | | | | | 11.9 | .1 | 11.8 | | | 32.91 | 7.4388 | 5.3194 | 67.3385 | 5.3565 | 8.1126 | 14.78 | 1.989 | .831 | | 4.85 | .378 | .126 | 14.16 | 1.126 | 1.099 | 9.31 | 1.504 | .973 | |
| $R_C$ | | | | | | .934 | 2.804 | 1.87 | | | 7.4388 | 1.4093 | .77476 | 5.3565 | 2.534 | .69845 | 1.989 | .1798 | .0010 | | .378 | .0295 | .00985 | 1.126 | .2718 | .1468 | 1.504 | .2423 | .1567 | |
| $N_C$ | | | | | | .305 | .925 | 1.23 | | | 5.3194 | .77476 | .27956 | 8.1126 | .69845 | .25904 | .831 | .0010 | .0789 | | .126 | .00985 | .003276 | 1.099 | .1468 | .1045 | .973 | .1567 | .1012 | |
| $T_D$ | | | | | | | 11.8 | .1 | 11.7 | | | | | 14.78 | 1.989 | .831 | 49.2327 | 1.1535 | 16.457 | 10.346 | | | | 9.31 | 1.504 | .973 | 27.21 | 4.436 | 8.903 | 5.94 |
| $R_D$ | | | | | | | 1.87 | 5.65 | 3.78 | | | | | 1.989 | .1798 | .0010 | 1.1535 | 4.1773 | 3.990 | 3.407 | | | | 1.504 | .2423 | .1567 | 4.436 | 2.2083 | 2.4634 | 1.966 |
| $N_D$ | | | | | | | 1.23 | 3.82 | 5.05 | | | | | .831 | .0010 | .0789 | 16.457 | 3.990 | 7.6103 | 4.510 | | | | .973 | .1567 | .1012 | 8.903 | 2.4634 | 3.5912 | 2.62 |
| $R_E$ | | | | | | | | 3.78 | 3.78 | | | | | | | | 10.346 | 3.407 | 4.510 | 3.472 | | | | | | | 5.94 | 1.966 | 2.62 | 1.966 |
| $T_F$ | | 11.9 | 11.9 | | | 11.9 | 11.9 | | | | 4.85 | .378 | .126 | 4.85 | .378 | .126 | | | | | 4.585 | 8.328 | 5.506 | 36.55 | 7.722 | 5.414 | | | | |
| $R_F$ | | .934 | .934 | | | .934 | .934 | | | | .378 | .0295 | .00985 | .378 | .0295 | .00985 | | | | | 8.328 | 1.8065 | .38785 | 7.722 | 1.4315 | .78215 | | | | |
| $N_F$ | | .305 | .305 | | | .305 | .305 | | | | .126 | .00985 | .003276 | .126 | .00985 | .003276 | | | | | 5.506 | .38785 | .152285 | 5.414 | .78215 | .282012 | | | | |
| $T_G$ | | 11.9 | .1 | 11.8 | | 11.9 | .1 | 11.8 | | | 4.85 | .378 | .126 | 14.16 | 1.126 | 1.099 | 9.31 | 1.504 | .973 | | 36.55 | 7.722 | 5.414 | 56.6986 | 6.1965 | 7.289 | 7.78 | .864 | .102 | |
| $R_G$ | | .934 | 2.804 | 1.87 | | .934 | 2.804 | 1.87 | | | .378 | .0295 | .00985 | 1.126 | .2718 | .1468 | 1.504 | .2423 | .1567 | | 7.722 | 1.4315 | .78215 | 6.1965 | 2.3298 | .8082 | .864 | .0022 | .1163 | |
| $N_G$ | | .305 | .925 | 1.23 | | .305 | .925 | 1.23 | | | .126 | .00985 | .003276 | 1.099 | .1468 | .1045 | .973 | .1567 | .1012 | | 5.414 | .78215 | .282012 | 7.289 | .8082 | .25175 | .102 | .1163 | .155 | |
| $T_H$ | | | 11.8 | .1 | 11.7 | | 11.8 | .1 | 11.7 | | | | | 9.31 | 1.504 | .973 | 27.21 | 4.436 | 8.903 | 5.94 | | | | 7.78 | .864 | .102 | 28.7823 | 3.8395 | 4.7873 | 5.906 |
| $R_H$ | | | 1.87 | 5.65 | 3.78 | | 1.87 | 5.65 | 3.78 | | | | | 1.504 | .2423 | .1567 | 4.436 | 2.2083 | 2.4634 | 1.966 | | | | .864 | .0022 | .1163 | 3.8395 | 2.5233 | 2.1436 | 1.935 |
| $N_H$ | | | 1.23 | 3.82 | 5.05 | | 1.23 | 3.82 | 5.05 | | | | | .973 | .1567 | .1012 | 8.903 | 2.4634 | 3.5912 | 2.62 | | | | .102 | .1163 | .155 | 4.7873 | 2.1436 | 4.9042 | 2.5457 |
| $R_J$ | | | | 3.78 | 3.78 | | | 3.78 | 3.78 | | | | | | | | 5.94 | 1.966 | 2.62 | 1.966 | | | | | | | 5.906 | 1.935 | 2.5457 | 2 |

TABLE I. OPERATIONS TABLE FOR THE SIMPLIFIED CYLINDER.

Table II. Complete Operations Table for Small Cylinder

| Stringer No. | | Ring AA | Ring BB |
|---|---|---|---|
| | | 1 2 3 4 5 6 7 8 9 | 1 2 3 4 5 6 7 8 9 |
| | 1 | A C | T V |
| | 2 | B E D | U X W |
| | 3 | F E D | Y X W |
| | 4 | F E D | Y X W |
| Ring AA | 5 | F E D | Y X W |
| | 6 | F E D | Y X W |
| | 7 | F E D | Y X W |
| | 8 | F E G | Y X Z |
| | 9 | $C_1$A | $V_1$T |
| | 1 | T V' | H K |
| | 2 | V'X W' | J M L |
| | 3 | Y'X W' | N M L |
| | 4 | Y'X W' | N M L |
| Ring BB | 5 | Y'X W' | N M L |
| | 6 | Y'X W' | N M L |
| | 7 | Y'X W' | N M L |
| | 8 | Y'X Z' | N P Q |
| | 9 | $V'_1$T | R S |

Table III. Sections of Operations Table for Small Cylinder

**Section A**

| | X | T | R | N |
|---|---|---|---|---|
| $\xi$ | -344.5 | | -1.872 | |
| v | -1.872 | | -5.39 | |

**Section B**

| | X | T | R | N |
|---|---|---|---|---|
| $\xi$ | 37.82 | | 1.872 | |
| u | -23.1 | | 23.94 | |
| v | 1.872 | | -4.56 | |
| w | -0.58 | | 2.60 | |

**Section C**

| | X | T | R | N |
|---|---|---|---|---|
| $\xi$ | 18.91 | -11.55 | 0.936 | -0.29 |
| v | 0.936 | 11.97 | -2.28 | 1.30 |

**Section $C_1$**

| | X | T | R | N |
|---|---|---|---|---|
| $\xi$ | 18.91 | +11.55 | 0.936 | 0.29 |
| v | 0.936 | -11.97 | -2.28 | -1.30 |

**Section D**

| | X | T | R | N |
|---|---|---|---|---|
| $\xi$ | 18.91 | -11.55 | 0.936 | -0.29 |
| u | 11.55 | 53.45 | -11.97 | 8.09 |
| v | 0.936 | 11.97 | -2.28 | 1.30 |
| w | 0.29 | 8.09 | -1.30 | 0.63 |

**Section E**

| | X | T | R | N |
|---|---|---|---|---|
| $\xi$ | -344.5 | 0 | -1.872 | 0 |
| u | 0 | -139.9 | 0 | -16.63 |
| v | -1.872 | 0 | -5.39 | 0 |
| w | 0 | -16.63 | 0 | -3.865 |

**Section F**

| | X | T | R | N |
|---|---|---|---|---|
| $\xi$ | 18.91 | 11.55 | 0.936 | 0.29 |
| u | -11.55 | 53.45 | 11.97 | 8.09 |
| v | 0.936 | -11.97 | -2.28 | -1.30 |
| w | -0.29 | 8.09 | 1.30 | 0.63 |

**Section G**

| | X | R |
|---|---|---|
| $\xi$ | 37.82 | 1.872 |
| u | 23.1 | -23.94 |
| v | 1.872 | -4.56 |
| w | 0.58 | -2.60 |

**Section H = S(no cutout)**

| | X | R |
|---|---|---|
| $\xi$ | -957.92 | 1.872 |
| v | 1.872 | -5.39 |

**Section J**

| | X | R |
|---|---|---|
| $\xi$ | 37.82 | -1.872 |
| u | 23.1 | 23.94 |
| v | -1.872 | -4.56 |
| w | 0.58 | 2.60 |

**Section K**

| | X | T | R | N |
|---|---|---|---|---|
| $\xi$ | 18.91 | +11.55 | -0.936 | +0.29 |
| v | -0.936 | -11.97 | +2.28 | -1.30 |

**Section R (no cutout)**

| | X | T | R | N |
|---|---|---|---|---|
| $\xi$ | 18.91 | -11.55 | -0.936 | -0.29 |
| v | -0.936 | -11.97 | -2.28 | -1.30 |

**Section L**

| | X | T | R | N |
|---|---|---|---|---|
| $\xi$ | 18.91 | 11.55 | -0.936 | 0.29 |
| u | -11.55 | 53.45 | -11.97 | 8.09 |
| v | -0.936 | 11.97 | -2.28 | 1.30 |
| w | -0.29 | 8.09 | -1.30 | 0.63 |

**Section M = P(no cutout)**

| | X | T | R | N |
|---|---|---|---|---|
| $\xi$ | -957.92 | 0 | 1.872 | 0 |
| u | 0 | -139.9 | 0 | -16.63 |
| v | 1.872 | 0 | -5.39 | 0 |
| w | 0 | -16.63 | 0 | -3.86 |

**Section N**

| | X | T | R | N |
|---|---|---|---|---|
| $\xi$ | 18.91 | -11.55 | -0.936 | -0.29 |
| u | 11.55 | 53.45 | 11.97 | 8.09 |
| v | -0.936 | -11.97 | -2.28 | -1.30 |
| w | 0.29 | 8.09 | 1.30 | 0.63 |

**Section Q (no cutout)**

| | X | R |
|---|---|---|
| $\xi$ | 37.82 | -1.872 |
| u | -23.1 | -23.94 |
| v | -1.872 | -4.56 |
| w | -0.58 | -2.60 |

**Section S (cutout)**

| | X | R |
|---|---|---|
| $\xi$ | -344.5 | 1.872 |
| v | 1.872 | -5.39 |

Table III. Sections of Operations Table for Small Cylinder (cont'd.)

Section R (cutout)

| | X | T | R | N |
|---|---|---|---|---|
| $\xi$ | 18.91 | -11.55 | -0.936 | -0.29 |
| v | -0.936 | -11.97 | -2.28 | -1.30 |

Section P (cutout)

| | X | T | R | N |
|---|---|---|---|---|
| $\xi$ | -880.92 | 0 | 1.872 | 0 |
| u | 0 | -139.9 | 0 | -16.63 |
| v | 1.872 | 0 | -5.39 | 0 |
| w | 0 | -16.63 | 0 | -3.86 |

Section Q (cutout)

| | X | T | R | N |
|---|---|---|---|---|
| $\xi$ | 37.82 | | -1.872 | |
| u | -23.1 | | -23.94 | |
| v | -1.872 | | -4.56 | |
| w | -0.58 | | -2.59 | |

Section T

| | X | T | R | N |
|---|---|---|---|---|
| $\xi$ | 268.9 | | -1.872 | |
| v | 1.872 | | 0.0925 | |

Section U

| | X | T | R | N |
|---|---|---|---|---|
| $\xi$ | 37.82 | | -1.872 | |
| u | -23.1 | | 1.142 | |
| v | 1.872 | | -0.0925 | |
| w | -0.58 | | 0.028 | |

Section V

| | X | T | R | N |
|---|---|---|---|---|
| $\xi$ | 18.91 | 11.55 | -0.936 | 0.29 |
| v | 0.936 | 0.571 | -0.0462 | 0.014 |

Section $V_1$

| | X | T | R | N |
|---|---|---|---|---|
| $\xi$ | 18.91 | -11.55 | -0.936 | -0.29 |
| v | 0.936 | -0.571 | -0.0462 | -0.014 |

Section W

| | X | T | R | N |
|---|---|---|---|---|
| $\xi$ | 18.91 | 11.55 | -0.936 | 0.29 |
| u | 11.55 | 7.05 | -0.571 | 0.177 |
| v | 0.936 | 0.571 | -0.0462 | 0.014 |
| w | 0.29 | 0.177 | -0.014 | 0.0044 |

Section X

| | X | T | R | N |
|---|---|---|---|---|
| $\xi$ | 268.9 | 0 | -1.872 | 0 |
| u | 0 | 14.1 | 0 | 0.354 |
| v | 1.872 | 0 | 0.0925 | 0 |
| w | 0 | 0.354 | 0 | 0.0088 |

Section Y

| | X | T | R | N |
|---|---|---|---|---|
| $\xi$ | 18.91 | -11.55 | -0.936 | -0.29 |
| u | -11.55 | 7.05 | 0.571 | 0.177 |
| v | 0.936 | -0.571 | -0.0462 | -0.014 |
| w | -0.29 | 0.177 | 0.014 | 0.0044 |

Section Z

| | X | T | R | N |
|---|---|---|---|---|
| $\xi$ | 37.82 | | -1.872 | |
| u | -23.1 | | 1.142 | |
| v | 1.872 | | -0.0925 | |
| w | -0.58 | | 0.028 | |

Section U'

| | X | T | R | N |
|---|---|---|---|---|
| $\xi$ | 37.82 | | 1.872 | |
| u | 23.1 | | 1.142 | |
| v | -1.872 | | -0.0925 | |
| w | 0.58 | | 0.028 | |

Section V'

| | X | T | R | N |
|---|---|---|---|---|
| $\xi$ | 18.91 | -11.55 | 0.936 | -0.29 |
| v | -0.936 | 0.571 | -0.0462 | 0.014 |

Section $V_1'$

| | X | T | R | N |
|---|---|---|---|---|
| $\xi$ | 18.91 | 11.55 | 0.936 | 0.29 |
| v | -0.936 | -0.571 | -0.0462 | -0.014 |

Section W'

| | X | T | R | N |
|---|---|---|---|---|
| $\xi$ | 18.91 | -11.55 | 0.936 | -0.29 |
| u | -11.55 | 7.05 | -0.571 | 0.177 |
| v | -0.936 | 0.571 | -0.0462 | 0.014 |
| w | -0.29 | 0.177 | -0.014 | 0.0044 |

Section Y'

| | X | T | R | N |
|---|---|---|---|---|
| $\xi$ | 18.91 | 11.55 | 0.936 | 0.29 |
| u | 11.55 | 7.05 | 0.571 | 0.177 |
| v | -0.936 | -0.571 | -0.0462 | -0.014 |
| w | 0.29 | 0.177 | 0.014 | 0.0044 |

Section Z'

| | X | T | R | N |
|---|---|---|---|---|
| $\xi$ | 37.82 | | 1.872 | |
| u | -23.1 | | -1.142 | |
| v | -1.872 | | -0.0925 | |
| w | -0.58 | | -0.028 | |

Table IV. Solution of Small Cylinder Without Cutout

Ring AA

| Rigid Body Motions | A 1 | A 2 | A 3 | A 4 | A 5 | A 6 | A 7 | A 8 | A 9 |
|---|---|---|---|---|---|---|---|---|---|
| | | | | | X Forces | | | | |
| $\omega_{AA} = 3$ | 928.8 | 858.3 | 656.7 | 355.5 | 0 | -355.5 | -656.7 | -858.3 | -928.8 |
| $\omega_{BB} = 1$ | -303.8 | -280.7 | -214.8 | -116.3 | 0 | 116.3 | 214.8 | 280.7 | 303.8 |
| $\eta_{AA} = 1.283$ | -11.52 | -10.65 | -8.15 | -4.40 | 0 | 4.40 | 8.15 | 10.65 | 11.52 |
| Sum | 613.48 | 566.95 | 433.75 | 234.8 | 0 | -234.8 | -433.75 | -566.95 | -613.48 |
| | | | | | T Forces | | | | |
| $\omega_{AA} = 3$ | 0 | 10.11 | 18.75 | 24.51 | 26.52 | 24.51 | 18.75 | 10.11 | 0 |
| $\omega_{BB} = 1$ | 0 | 3.37 | 6.25 | 8.17 | 8.84 | 8.17 | 6.25 | 3.37 | 0 |
| $\eta_{AA} = 1.283$ | 0 | -13.54 | -25.02 | -32.67 | -35.36 | -32.67 | -25.02 | -13.54 | 0 |
| Sum | 0 | -0.06 | -0.02 | 0.01 | 0.00 | 0.01 | -0.02 | -0.06 | 0 |
| | | | | | R Forces | | | | |
| $\omega_{AA} = 3$ | 0.43 | 0.40 | 0.30 | 0.16 | 0 | -0.16 | -0.30 | -0.40 | -0.43 |
| $\omega_{BB} = 1$ | 0.14 | 0.13 | 0.10 | 0.05 | 0 | -0.05 | -0.10 | -0.13 | -0.14 |
| $\eta_{AA} = 1.283$ | -0.57 | -0.53 | -0.41 | -0.22 | 0 | 0.22 | 0.41 | 0.53 | 0.57 |
| Sum | 0.00 | 0.00 | -0.01 | -0.01 | 0 | 0.01 | 0.01 | 0.00 | 0.00 |
| | | | | | Moments | | | | |
| $\omega_{AA} = 3$ | 0 | 0.26 | 0.47 | 0.62 | 0.67 | 0.62 | 0.47 | 0.26 | 0 |
| $\omega_{BB} = 1$ | 0 | 0.08 | 0.16 | 0.21 | 0.22 | 0.21 | 0.16 | 0.08 | 0 |
| $\eta_{AA} = 1.283$ | 0 | -0.34 | -0.63 | -0.82 | -0.89 | -0.82 | -0.63 | -0.34 | 0 |
| Sum | 0 | 0.00 | 0.00 | 0.01 | 0.00 | 0.01 | 0.00 | 0.00 | 0 |

Table IV. Solution of Small Cylinder Without Cutout (cont'd.)

| Rigid Body Motions | B 1 | B 2 | B 3 | B 4 | B 5 | B 6 | B 7 | B 8 | B 9 |
|---|---|---|---|---|---|---|---|---|---|
| | | | | | Ring BB | | | | |
| | | | | | X Forces | | | | |
| $\omega_{AA} = 3$ | -911.4 | -842.1 | -644.4 | -348.9 | 0 | 348.9 | 644.4 | 842.1 | 911.4 |
| $\omega_{BB} = 1$ | 922.98 | 852.72 | 652.65 | 353.2 | 0 | -353.2 | -652.65 | -852.72 | -922.98 |
| $\eta_{AA} = 1.283$ | -11.53 | -10.65 | -8.15 | -4.40 | 0 | 4.40 | 8.15 | 10.65 | 11.53 |
| Sum | 0.05 | -0.03 | 0.10 | -0.10 | 0 | 0.10 | -0.10 | 0.03 | -0.05 |
| | | | | | T Forces | | | | |
| $\omega_{AA} = 3$ | 0 | -10.11 | -18.75 | -24.51 | -26.52 | -24.51 | -18.75 | -10.11 | 0 |
| $\omega_{BB} = 1$ | 0 | -3.37 | -6.25 | -8.17 | -8.84 | -8.17 | -6.25 | -3.37 | 0 |
| $\eta_{AA} = 1.283$ | 0 | 13.54 | 25.02 | 32.67 | 35.36 | 32.67 | 25.02 | 13.54 | 0 |
| Sum | 0 | 0.06 | 0.02 | -0.01 | 0.00 | -0.01 | 0.02 | 0.06 | 0 |
| | | | | | R Forces | | | | |
| $\omega_{AA} = 3$ | -0.43 | -0.40 | -0.30 | -0.16 | 0 | 0.16 | 0.30 | 0.40 | 0.43 |
| $\omega_{BB} = 1$ | -0.14 | -0.13 | -0.10 | -0.05 | 0 | -0.05 | 0.10 | 0.13 | 0.14 |
| $\eta_{AA} = 1.283$ | 0.57 | 0.53 | 0.41 | 0.22 | 0 | -0.22 | -0.41 | -0.53 | -0.57 |
| Sum | 0.00 | 0.00 | 0.01 | 0.01 | 0 | -0.01 | -0.01 | 0.00 | 0.00 |
| | | | | | Moments | | | | |
| $\omega_{AA} = 3$ | 0 | -0.26 | -0.47 | -0.62 | -0.67 | -0.62 | -0.47 | -0.26 | 0 |
| $\omega_{BB} = 1$ | 0 | -0.08 | -0.16 | -0.21 | -0.22 | -0.21 | -0.16 | -0.08 | 0 |
| $\eta_{AA} = 1.283$ | 0 | 0.34 | 0.63 | 0.82 | 0.89 | 0.82 | 0.63 | 0.34 | 0 |
| Sum | 0 | 0.00 | 0.00 | -0.01 | 0.00 | -0.01 | 0.00 | 0.00 | 0 |

Table V. Portion of Operations Table for Small Cylinder with Cutout

Forces in lb. and Moments in in. lb.

| Motions in 0.001 of in. or rad. | $X_{B7}$ | $T_{B7}$ | $R_{B7}$ | $N_{B7}$ | $X_{B8}$ | $T_{B8}$ | $R_{B8}$ | $N_{B8}$ | $X_{B9}$ | $R_{B9}$ | $X_{AB}$ | $X_{BB'}$ | $(M_{AB}-M_{BB'})/r$ | $Y_{AA}$ |
|---|---|---|---|---|---|---|---|---|---|---|---|---|---|---|
| $\xi_{B7}$ | -957.92 | 0 | 1.872 | 0 | 18.91 | 11.55 | -0.936 | 0.29 | 0 | 0 | 613.4 | -1226.8 | -1301.2 | 12.70 |
| $u_{B7}$ | 0 | -139.9 | 0 | -16.63 | -11.55 | 53.45 | -11.97 | 8.09 | 0 | 0 | 0 | 0 | 0 | 38.98 |
| $v_{B7}$ | 1.872 | 0 | -5.39 | 0 | -0.936 | 11.97 | -2.28 | 1.30 | 0 | 0 | 0 | 0 | 0 | -0.628 |
| $w_{B7}$ | 0 | -16.63 | 0 | -3.86 | -0.29 | 8.09 | -1.30 | 0.63 | 0 | 0 | 0 | 0 | 0 | 0.978 |
| $\xi_{B8}$ | 18.91 | -11.55 | -0.936 | -0.29 | -880.92 | 0 | 1.872 | 0 | 37.82 | -1.872 | 613.4 | -1072 | -1557.8 | 16.00 |
| $u_{B8}$ | 11.55 | 53.45 | 11.97 | 8.09 | 0 | -139.9 | 0 | -16.63 | -22.1 | -23.94 | 0 | 0 | 0 | 21.10 |
| $v_{B8}$ | -0.936 | -11.97 | -2.28 | -1.30 | 1.872 | 0 | -5.39 | 0 | -1.872 | -4.56 | 0 | 0 | 0 | -0.821 |
| $w_{B8}$ | 0.29 | 8.09 | 1.30 | 0.63 | 0 | -16.63 | 0 | -3.86 | -0.58 | -2.59 | 0 | 0 | 0 | 0.536 |
| $\xi_{B9}$ | 0 | 0 | 0 | 0 | 18.91 | -11.55 | -0.936 | -0.29 | -344.5 | 1.872 | 306.7 | 0 | -306.7 | 8.98 |
| $v_{B9}$ | 0 | 0 | 0 | 0 | -0.936 | -11.97 | -2.28 | -1.30 | 1.872 | -5.39 | 0 | 0 | 0 | -0.444 |
| $\xi_{AA}$ | 306.7 | 0 | 0 | 0 | 306.7 | 0 | 0 | 0 | 306.7 | 0 | -4907.2 | 0 | 0 | 0 |
| $\xi_{BB}$ | -920.1 | 0 | 0 | 0 | -843.1 | 0 | 0 | 0 | -306.7 | 0 | 4907.2 | -9047 | 755.7 | 0 |
| $\omega_{BB}$ | -652.65 | -6.25 | 0.1008 | -0.1569 | -781.58 | -3.38 | 0.1316 | -0.0849 | -309.58 | 0.1425 | 0 | 755.67 | -6616 | 71.86 |
| $\eta_{AA}$ | 6.35 | 19.50 | -0.314 | 0.49 | 8.30 | 10.55 | -0.41 | 0.264 | 8.98 | -0.445 | 0 | 0 | 0 | -224.04 |

Table VI. X Matrix

| | $X_{B7}$ | $X_{B8}$ | $X_{B9}$ | $X_{BB'}$ |
|---|---|---|---|---|
| $\xi_7$ | -957.92 | 18.91 | 0 | -1226.8 |
| $\xi_8$ | 18.91 | -880.92 | 37.82 | -1072 |
| $\xi_9$ | 0 | 18.91 | -344.5 | 0 |
| $\xi$ Group | 0 | 77.0 | 613.4 | -9047 |

Table VII. Ring Matrix No. 1

| | $T_{B7}$ | $R_{B7}$ | $N_{B7}$ | $T_{B8}$ | $R_{B8}$ | $N_{B9}$ | $R_{B9}$ |
|---|---|---|---|---|---|---|---|
| $u_7$ | -139.9 | 0 | -16.63 | 53.45 | -11.97 | 8.09 | 0 |
| $v_7$ | 0 | -5.39 | 0 | 11.97 | -2.28 | 1.30 | 0 |
| $w_7$ | -16.63 | 0 | -3.86 | 8.09 | -1.30 | 0.63 | 0 |
| $u_8$ | 53.45 | 11.97 | 8.09 | -139.9 | 0 | -16.63 | -23.94 |
| $v_8$ | -11.97 | -2.28 | -1.30 | 0 | -5.39 | 0 | -4.56 |
| $w_8$ | 8.09 | 1.30 | 0.63 | -16.63 | 0 | -3.86 | -2.59 |
| $v_9$ | 0 | 0 | 0 | -11.97 | -2.28 | -1.30 | -5.39 |

Table VIII. Ring Matrix No. 2

| | $X_{B6}$ | $T_{B6}$ | $R_{B6}$ | $N_{B6}$ |
|---|---|---|---|---|
| $\xi_7$ | -957.92 | 0 | 1.872 | 0 |
| $u_7$ | 0 | -139.9 | 0 | -16.63 |
| $v_7$ | 1.872 | 0 | -5.39 | 0 |
| $w_7$ | 0 | -16.63 | 0 | -3.83 |

Table VIII. Check Table

Unbalances in lbs. and in. lb.

| Motions | $X_{B5}$ | $T_{B5}$ | $R_{B5}$ | $N_{B5}$ | $X_{B6}$ | $T_{B6}$ | $R_{B6}$ | $N_{B6}$ |
|---|---|---|---|---|---|---|---|---|
| Results for Complete Cyl | | | | | | | | |
| $\xi_6$ 0.003505 | 0.06628 | -0.0405 | -0.0033 | -0.0010 | -3.3575 | 0 | 0.0066 | 0 |
| $u_6$ 0.021463 | 0.2479 | 1.1472 | 0.2569 | 0.1736 | 0 | -3.0027 | 0 | -0.3569 |
| $v_6$ 0.47026 | -0.4402 | -5.6290 | -1.0722 | -0.6113 | 0.8803 | 0 | -2.5347 | 0 |
| $w_6$ 0.35857 | 0.1040 | 2.9008 | 0.4661 | 0.2259 | 0 | -5.9630 | 0 | -1.3841 |
| $\xi_7$ -0.00921 | | | | | -0.17416 | 0.10638 | 0.0086 | 0.0027 |
| $u_7$ 0.14407 | | | | | 1.6640 | 7.7005 | 1.7245 | 1.1655 |
| $v_7$ -1.31717 | | | | | 1.2329 | 15.7665 | 3.0031 | 1.7123 |
| $w_7$ -1.58683 | | | | | -0.4602 | -12.8375 | -2.0629 | -0.9997 |
| $\xi_8$ 0.11848 | | | | | | | | |
| $u_8$ -1.19199 | | | | | | | | |
| $v_8$ -2.80219 | | | | | | | | |
| $w_8$ 2.12196 | | | | | | | | |
| $\xi_9$ 2.0422 | | | | | | | | |
| $\xi_{AA}$ 0.21822 | 66.9281 | | | | 66.9281 | | | |
| $\xi_{BB}$ 0.07274 | -66.9281 | | | | -66.9281 | | | |
| $\omega_{BB}$ -0.005 | 0 | 0.0442 | 0 | 0.0011 | 1.766 | 0.0409 | -0.0003 | 0.0010 |
| $v_9$ 7.31332 | | | | | | | | |
| Sum | -0.02202 | -1.5773 | -0.3525 | -0.2117 | 1.5513 | 1.8111 | 0.1449 | 0.1408 |

Table VIII. Check Table (cont'd.)

Unbalances in lbs. and in. lb.

| Motions | | $X_{B7}$ | $T_{B7}$ | $R_{B7}$ | $N_{B7}$ | $X_{B8}$ | $T_{B8}$ | $R_{B8}$ | $N_{B8}$ |
|---|---|---|---|---|---|---|---|---|---|
| Results for Complete Cyl. | | | | | | 71.17 | | | |
| $\xi_6$ | 0.003505 | 0.06628 | 0.0405 | -0.0033 | 0.0010 | | | | |
| $u_6$ | 0.021463 | -0.2479 | 1.1472 | -0.2569 | 0.1736 | | | | |
| $v_6$ | 0.47026 | -0.4402 | 5.6290 | -1.0722 | 0.6113 | | | | |
| $w_6$ | 0.35857 | -0.1040 | 2.9008 | -0.4661 | 0.2259 | | | | |
| $\xi_7$ | -0.00921 | 8.8224 | 0 | -0.01724 | 0 | -0.17416 | -0.10638 | 0.0086 | -0.0027 |
| $u_7$ | 0.14407 | 0 | -20.1554 | 0 | -2.3959 | -1.6640 | 7.7005 | -1.7245 | 1.1655 |
| $v_7$ | -1.31717 | -2.4657 | 0 | 7.0995 | .0 | 1.2329 | -15.7665 | 3.0031 | -1.7123 |
| $w_7$ | -1.58683 | 0 | 26.3890 | 0 | 6.1252 | 0.4602 | -12.8375 | 2.0629 | -0.9997 |
| $\xi_8$ | 0.11848 | 2.2405 | -1.3684 | -0.1109 | -0.0344 | -104.3714 | 0 | 0.2218 | 0 |
| $u_8$ | -1.19199 | -13.7675 | -63.7118 | -14.2681 | -9.6432 | 0 | 16.67594 | 0 | 19.8228 |
| $v_8$ | -2.80219 | 2.6228 | 33.5422 | 6.3890 | 3.6428 | -5.2457 | 0 | 15.1038 | 0 |
| $w_8$ | 2.12196 | 0.61537 | 17.1666 | 2.7585 | 1.3368 | 0 | -35.2882 | 0 | -8.1908 |
| $\xi_9$ | 2.0422 | | | | | 38.6180 | -23.5874 | -1.9115 | -0.5922 |
| $\xi_{AA}$ | 0.21822 | 66.9281 | | | | 66.9281 | | | |
| $\xi_{BB}$ | 0.07274 | -66.9281 | | | | -61.3271 | | | |
| $\omega_{BB}$ | -0.005 | 3.2633 | 0.0313 | -0.0005 | 0.0008 | 3.9079 | 0.0169 | -0.0007 | 0.0004 |
| $v_9$ | 7.31332 | | | | | -6.8453 | -87.5404 | -16.6744 | -9.5073 |
| | Sum | 0.6054 | 1.6110 | 0.05176 | 0.0439 | 2.6894 | -0.6496 | 0.0891 | -0.0163 |

Table VIII. Check Table (cont'd.)

Unbalances in lbs. and in. lb.

| Motions | $X_{B9}$ | $R_{B9}$ | $X_{AB}$ | $X_{AB'}$ | $\frac{M_{AB}-M_{BB'}}{r}$ | $Y_{AA}$ |
|---|---|---|---|---|---|---|
| Results for Complete Cyl. | 613.32 | | | 755.67 | 744.8 | |
| $\xi_6$ 0.003505 | | | 2.150 | -4.300 | -4.561 | 0.0241 |
| $u_6$ 0.021463 | | | | | | 1.0903 |
| $v_6$ 0.47026 | | | | | | -0.1599 |
| $w_6$ 0.358566 | | | | | | 0.4590 |
| $\xi_7$ -0.00921 | | | -5.649 | 11.299 | 11.984 | -0.1170 |
| $u_7$ 0.144073 | | | | | | 5.6158 |
| $v_7$ -1.31717 | | | | | | 0.8272 |
| $w_7$ -1.58683 | | | | | | -1.5519 |
| $\xi_8$ 0.11848 | 4.4809 | -0.2218 | 72.673 | -127.01 | -184.56 | 1.9667 |
| $u_8$ -1.191988 | 27.5350 | 28.5362 | | | | -25.1510 |
| $v_8$ -2.802185 | 5.2457 | 12.7780 | | | | 2.3006 |
| $w_8$ 2.12196 | -1.2307 | -5.4959 | | | | 1.1374 |
| $\xi_9$ 2.0422 | -703.538 | 3.823 | 626.343 | | -626.343 | 18.3390 |
| $\xi_{AA}$ 0.21822 | 66.9281 | | -1070.849 | | | |
| $\xi_{BB}$ 0.07274 | -22.3094 | | 356.950 | -658.08 | 54.970 | |
| $\omega_{BB}$ -0.005 | 1.5479 | -0.0006 | | -3.778 | 33.308 | |
| $w_9$ 7.31332 | 13.6905 | -39.4188 | | | | -3.2471 |
| Sum | 5.6700 | 0.0001 | -18.382 | -26.199 | 29.598 | 1.5332 |

## Table IX. Final Relaxation Table

Unbalances in lb. and in. lb.

| Motions | $X_{B4}$ | $T_{B4}$ | $R_{B4}$ | $N_{B4}$ | $X_{B5}$ | $T_{B5}$ | $R_{B5}$ | $N_{B5}$ |
|---|---|---|---|---|---|---|---|---|
| of Table VIII | | | | | -0.02202 | -1.5773 | -0.3525 | -0.2117 |
| $v_5 = -0.1$ | 0.0936 | 1.1970 | 0.228 | 0.1300 | -0.1872 | 0 | 0.539 | 0 |
| $w_5 = -0.08$ | -0.0232 | -0.6472 | -.104 | -0.0504 | 0 | 1.3304 | 0 | 0.3088 |
| $v_6 = 0.08$ | | | | | -0.0749 | -0.9576 | -0.1824 | -0.104 |
| $u_7 = 0.01$ | | | | | | | | |
| $\psi_{BB} = 0.004$ | 1.4128 | 0.0327 | 0.0002 | 0.0008 | 0 | -0.0354 | 0 | -0.0009 |
| Final Residuals | 1.4832 | 0.5825 | 0.1242 | 0.0804 | -0.2037 | -1.2399 | 0.0041 | -.0078 |

| Motions | $X_{B6}$ | $T_{B6}$ | $R_{B6}$ | $N_{B6}$ | $X_{B7}$ | $T_{B7}$ | $R_{B7}$ | $N_{B7}$ |
|---|---|---|---|---|---|---|---|---|
| of Table VIII | 1.5513 | 1.8111 | 0.1449 | 0.1408 | 0.6054 | 1.6110 | 0.0518 | 0.0439 |
| $v_5 = -0.1$ | 0.0936 | -1.197 | 0.228 | -0.13 | | | | |
| $w_5 = -0.08$ | 0.0232 | -0.6472 | 0.104 | -0.0504 | | | | |
| $v_6 = 0.08$ | 0.1498 | 0 | -0.4312 | 0 | -0.0749 | 0.9576 | -0.1824 | 0.104 |
| $u_7 = 0.01$ | 0.1155 | 0.5345 | 0.1197 | 0.0809 | 0 | -1.399 | 0 | -0.1663 |
| $\psi_{BB} = 0.004$ | -1.4128 | -0.0327 | 0.0002 | -0.0008 | -2.6106 | -0.0250 | 0.0004 | -0.0006 |
| Final Residuals | 0.5206 | 0.4686 | 0.1656 | 0.0405 | -2.0801 | 1.1446 | -0.1302 | -0.019 |

| Motions | $X_{B8}$ | $T_{B8}$ | $R_{B8}$ | $N_{B8}$ | $X_{B9}$ | $R_{B9}$ | $X_{AB}$ | $X_{BB'}$ | $\frac{M_{AB}-M_{BB'}}{r}$ | $Y_{AA}$ |
|---|---|---|---|---|---|---|---|---|---|---|
| of Table VIII | 2.6894 | -0.6496 | 0.0891 | -0.0163 | 5.6700 | 0.0001 | -18.382 | -26.199 | 29.598 | 1.5332 |
| $u_7 = 0.01$ | -0.1155 | 0.5345 | -0.1197 | 0.0809 | | | | | | |
| $\xi_{Group} = -0.002$ | -0.154 | | | | -1.226 | | 19.629 | 18.094 | -1.511 | |
| $\psi_{BB} = 0.004$ | -3.1263 | -0.0135 | 0.0006 | -0.0003 | -1.2383 | 0.0005 | | 3.022 | -26.646 | |
| Final Residuals | -0.7064 | -0.1286 | -0.03 | 0.0643 | 3.2057 | 0.0006 | 1.247 | -5.083 | 1.441 | 1.5332 |

Table X. Complete Operations Table for Large Cylinder

| Rings | AA | BB | CC | DD |
|---|---|---|---|---|
| AA | 1 | 2 | | |
| BB | 3 | 4 | 2 | |
| CC | | 3 | 5 | 6 |
| DD | | | 7 | 8 |

Table XI. Section 4 of Operations Table for Large Cylinder

| | | Ring BB | | | | | | | | |
|---|---|---|---|---|---|---|---|---|---|---|
| Stringer | No. | 1 | 2 | 3 | 4 | 5 | 6 | 7 | 8 | 9 |
| | 1 | a | c | | | | | | | |
| | 2 | b | e | d | | | | | | |
| | 3 | | f | e | d | | | | | |
| | 4 | | | f | e | d | | | | |
| Ring BB | 5 | | | | f | e | d | | | |
| | 6 | | | | | f | e | d | | |
| | 7 | | | | | | f | e | d | |
| | 8 | | | | | | | f | e | g |
| | 9 | | | | | | | | $c_1$ | a |

Table XII. Portion of Operations Table for Large Cylinder

| | | Ring CC | | | | | | | | | Ring DD | | | | | | | | |
|---|---|---|---|---|---|---|---|---|---|---|---|---|---|---|---|---|---|---|---|
| | Stringer No. | 1 | 2 | 3 | 4 | 5 | 6 | 7 | 8 | 9 | 1 | 2 | 3 | 4 | 5 | 6 | 7 | 8 | 9 |
| Ring CC | 1 | a | c | | | | | | | | T | V | | | | | | | |
| | 2 | b | e | d | | | | | | | U | X | W | | | | | | |
| | 3 | | f | e | d | | | | | | | Y | X | W | | | | | |
| | 4 | | | f | e | d | | | | | | | Y | X | W | | | | |
| | 5 | | | | f | e | d | | | | | | | Y | X | W | | | |
| | 6 | | | | | f | e | d | | | | | | | Y | X | W | | |
| | 7 | | | | | | f | e | d | | | | | | | Y | X | W | |
| | 8 | | | | | | | f | h | j | | | | | | | Y | r | s |
| | 9 | | | | | | | | k | l | | | | | | | | t | u |
| Ring DD | 1 | T | V' | | | | | | | | H | K | | | | | | | |
| | 2 | U' | X | W' | | | | | | | J | M | L | | | | | | |
| | 3 | | Y' | X | W' | | | | | | | N | M | L | | | | | |
| | 4 | | | Y' | X | W' | | | | | | | N | M | L | | | | |
| | 5 | | | | Y' | X | W' | | | | | | | N | M | L | | | |
| | 6 | | | | | Y' | X | W' | | | | | | | N | M | L | | |
| | 7 | | | | | | Y' | X | W' | | | | | | | N | M | L | |
| | 8 | | | | | | | Y' | r' | s' | | | | | | | N | m | n |
| | 9 | | | | | | | | t' | u | | | | | | | | p | q |

Table XIII. Elements of Sections of Operations Table for Large Cylinder

Element a

| | X | T | R | N |
|---|---|---|---|---|
| $\xi$ | -689.0 | | 0 | |
| v | 0 | | -5.49 | |

Element b

| | X | T | R | N |
|---|---|---|---|---|
| $\xi$ | 75.63 | | 0 | |
| u | 0 | | 22.8 | |
| v | 0 | | -4.84 | |
| w | 0 | | 2.56 | |

Element c

| | X | T | R | N |
|---|---|---|---|---|
| $\xi$ | 37.82 | 0 | 0 | 0 |
| v | 0 | 11.40 | -2.24 | 1.28 |

Element d

| | X | T | R | N |
|---|---|---|---|---|
| $\xi$ | 37.82 | 0 | 0 | 0 |
| u | 0 | 46.4 | -11.40 | 7.91 |
| v | 0 | 11.40 | -2.24 | 1.28 |
| w | 0 | 7.91 | -1.28 | 0.625 |

Element e

| | X | T | R | N |
|---|---|---|---|---|
| $\xi$ | -689.0 | 0 | 0 | 0 |
| u | 0 | -154.0 | 0 | -16.99 |
| v | 0 | 0 | -5.49 | 0 |
| w | 0 | -16.99 | 0 | -3.874 |

Element f

| | X | T | R | N |
|---|---|---|---|---|
| $\xi$ | 37.82 | 0 | 0 | 0 |
| u | 0 | 46.4 | 11.40 | 7.91 |
| v | 0 | -11.40 | -2.24 | -1.28 |
| w | 0 | 7.91 | 1.28 | 0.625 |

Element $\ell$

| | X | T | R | N |
|---|---|---|---|---|
| $\xi$ | -344.5 | | 1.872 | |
| v | 1.872 | | -5.39 | |

Element m (cutout)

| | X | T | R | N |
|---|---|---|---|---|
| $\xi$ | -823.6 | -11.55 | 0.936 | -0.29 |
| u | -11.55 | -70.0 | 13.05 | -8.32 |
| v | 0.936 | 13.05 | -2.698 | 1.972 |
| w | -0.29 | -8.32 | 1.972 | -1.932 |

For Cutout

$s = t = u = 0$
$s' = t' = 0$
$n = p = q = 0$

Element $c_1$

| | X | T | R | N |
|---|---|---|---|---|
| $\xi$ | 37.82 | 0 | 0 | 0 |
| v | 0 | -11.40 | -2.24 | -1.28 |

Element g

| | X | T | R | N |
|---|---|---|---|---|
| $\xi$ | 75.63 | | 0 | |
| u | 0 | | 22.8 | |
| v | 0 | | -4.48 | |
| w | 0 | | 2.56 | |

Element k (cutout)

| | X | T | R | N |
|---|---|---|---|---|
| $\xi$ | 18.91 | -11.55 | -0.936 | -0.29 |
| v | -0.936 | -11.97 | -2.284 | -1.296 |

Element j (cutout)

| | X | T | R | N |
|---|---|---|---|---|
| $\xi$ | 37.82 | | -1.872 | |
| u | -23.1 | | -23.94 | |
| v | -1.872 | | -4.567 | |
| w | -0.58 | | -2.592 | |

Element h (cutout)

| | X | T | R | N |
|---|---|---|---|---|
| $\xi$ | -631.6 | 11.55 | 0.936 | 0.29 |
| u | 11.55 | -147 | 0.571 | -16.81 |
| v | 0.936 | 0.571 | -5.54 | 0.014 |
| w | 0.29 | -16.81 | 0.014 | -3.88 |

For no cutout

$h = e$
$j = g$
$k = c_1$
$\ell = a$

Element r (cutout)

| | X | T | R | N |
|---|---|---|---|---|
| $\xi$ | 249.3 | -11.55 | 0.936 | -0.29 |
| u | 11.55 | 7.05 | -0.571 | 0.177 |
| v | -0.936 | -0.571 | 0.0462 | -0.014 |
| w | 0.29 | 0.177 | -0.014 | 0.0044 |

For no cutout

$r = X$ $\quad r' = X$
$s = Z$ $\quad s' = Z'$
$t = V_1$ $\quad t' = V_1'$
$u = T$

Element r' (cutout)

| | X | T | R | N |
|---|---|---|---|---|
| $\xi$ | 249.3 | 11.55 | -0.936 | 0.29 |
| u | -11.55 | 7.05 | -0.871 | 0.177 |
| v | 0.936 | -0.571 | 0.0462 | -0.014 |
| w | -0.29 | 0.177 | -0.014 | 0.0044 |

## Table XIV. Final Displacements for Large Cylinder

Axial Displacements
in .001 in.

| | Ring A | Ring B | Ring C | Ring D |
|---|---|---|---|---|
| $\omega$ | 7 | 5 | 3 | 1 |
| $\xi_{ring}$ | 0.45828 | 0.36236 | 0.19605 | 0.05024 |
| $\xi_5$ | | | | 0.02706 |
| $\xi_6$ | | -0.07831 | -0.07749 | -0.03364 |
| $\xi_7$ | | 0.02165 | 0.10335 | 0.08315 |
| $\xi_8$ | | 0.22974 | 0.47192 | 0.18628 |
| $\xi_9$ | | 1.40256 | 3.31413 | |

Displacements in Planes of Rings in .001 in. or .001 rad.

| | | | | |
|---|---|---|---|---|
| $\eta$ | 7.6981 | 3.849 | 1.2830 | |
| $u_4$ | | 0 | -0.05020 | 0.01 |
| $v_4$ | | 0.05 | 0.36260 | -0.05 |
| $w_4$ | | 0.04 | 0.66364 | -0.12 |
| $u_5$ | | 0.03615 | 0.37441 | 0.37385 |
| $v_5$ | | 0.11458 | 0.55414 | 2.39213 |
| $w_5$ | | 0.03033 | -1.01502 | 0.59187 |
| $u_6$ | | 0.03642 | -0.22174 | 0.51767 |
| $v_6$ | | -0.45799 | -2.20055 | -5.37900 |
| $w_6$ | | -0.47259 | 0.99654 | -4.4485 |
| $u_7$ | | -0.36193 | -0.32158 | -3.23801 |
| $v_7$ | | -0.63495 | -0.58833 | -4.54688 |
| $w_7$ | | 0.76479 | -2.15896 | 8.41864 |
| $u_8$ | | .03405 | -2.1623 | 5.32914 |
| $v_8$ | | 1.73885 | -4.77541 | 53.20725 |
| $w_8$ | | -0.47318 | 3.30103 | 17.21916 |
| $v_9$ | | -1.58075 | 13.36862 | |

Table XV. Residuals for Large Cylinder

Axial Forces in lb.

| B6 | B7 | B8 | B9 | C6 | C7 | C8 | C9 |
|---|---|---|---|---|---|---|---|
| 1.186 | -11.687 | -8.616 | 13.493 | 6.341 | -5.775 | -0.514 | 11.015 |
| D5 | D6 | D7 | D8 | $X_{AB}$ | $X_{BC}$ | $X_{CD}$ | $X_{DD'}$ |
| -5.287 | -10.412 | -3.088 | 13.169 | 21.47 | 9.36 | -8.76 | 0.01 |

Ring B - Forces in lb. Moments in in. lb.

| $T_4$ | $R_4$ | $N_4$ | $T_5$ | $R_5$ | $N_5$ | $T_6$ | $R_6$ |
|---|---|---|---|---|---|---|---|
| 1.4014 | 0.1172 | 0.0403 | 1.8386 | -0.0096 | 0.0381 | 0.5852 | -0.1127 |

Ring C - Forces in lb. Moments in in.-lb.

| | | | | | | | |
|---|---|---|---|---|---|---|---|
| 1.3795 | -0.1182 | -0.0509 | 0.7087 | 0.0572 | -0.0440 | 0.1126 | -0.0384 |

Ring D - Forces in lb. Moments in in.-lb.

| | | | | | | | |
|---|---|---|---|---|---|---|---|
| 0.1882 | 0.0241 | -0.0143 | -1.0753 | 0.1361 | 0.0219 | -0.0938 | -0.0196 |

Ring B - Forces in lb. Moments in in.-lb.

| $N_6$ | $T_7$ | $R_7$ | $N_7$ | $T_8$ | $R_8$ | $N_8$ | $R_9$ |
|---|---|---|---|---|---|---|---|
| 0.0470 | -0.0208 | -0.0488 | 0.0037 | 1.094 | 0.1464 | 0.0376 | -0.1491 |

Ring C - Forces in lb. Moments in in.-lb.

| | | | | | | | |
|---|---|---|---|---|---|---|---|
| -0.0297 | -0.7775 | 0.0960 | -0.0294 | -1.957 | -0.0864 | -0.0501 | 0.1454 |

Ring D - Forces in lb. Moments in in.-lb.

| | | | | | | |
|---|---|---|---|---|---|---|
| -0.0216 | -1.2798 | -0.0275 | -0.0252 | -1.7565 | -0.1682 | -0.0441 |

(a) ACTUAL CYLINDER

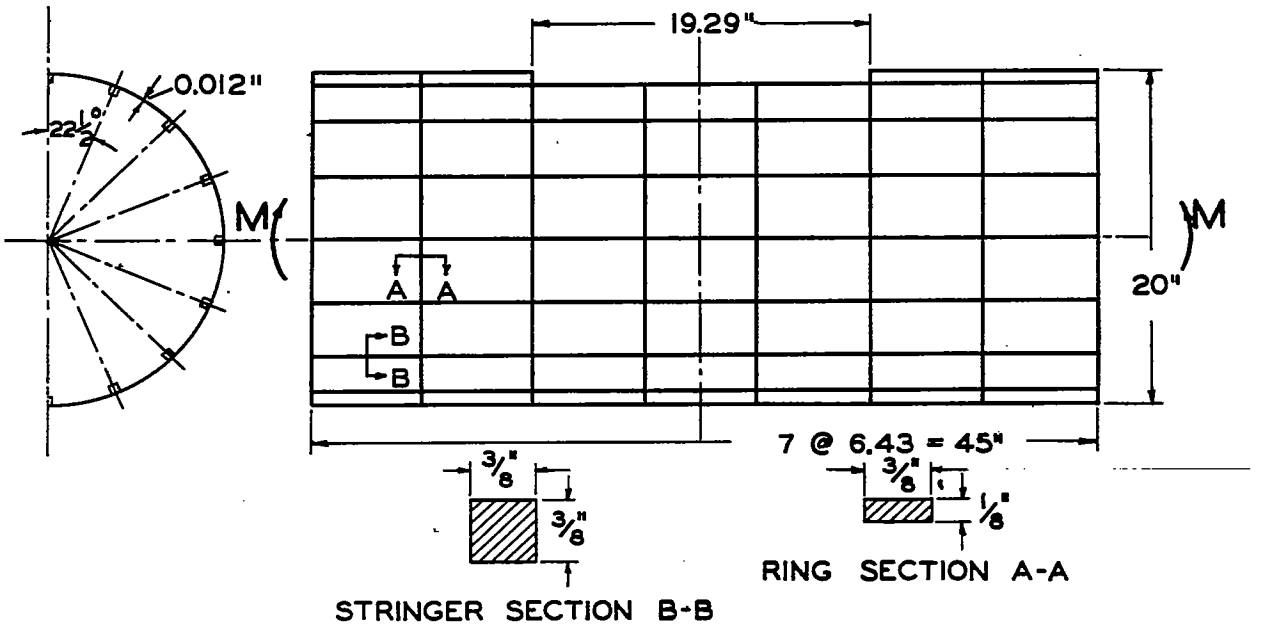


(b) SIMPLIFIED CYLINDER

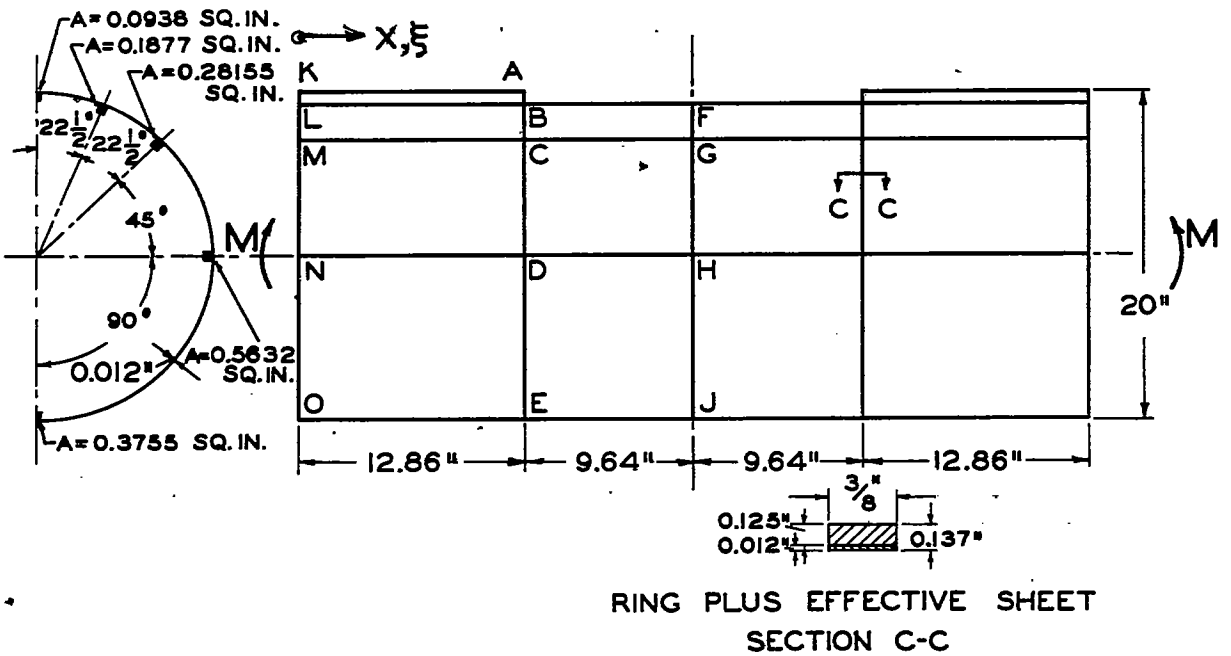


FIG. 1. MONOCOQUE CYLINDER

SHEET : 24 ST ALCLAD
REINFORCEMENTS : 24 ST ALUM. ALLOY

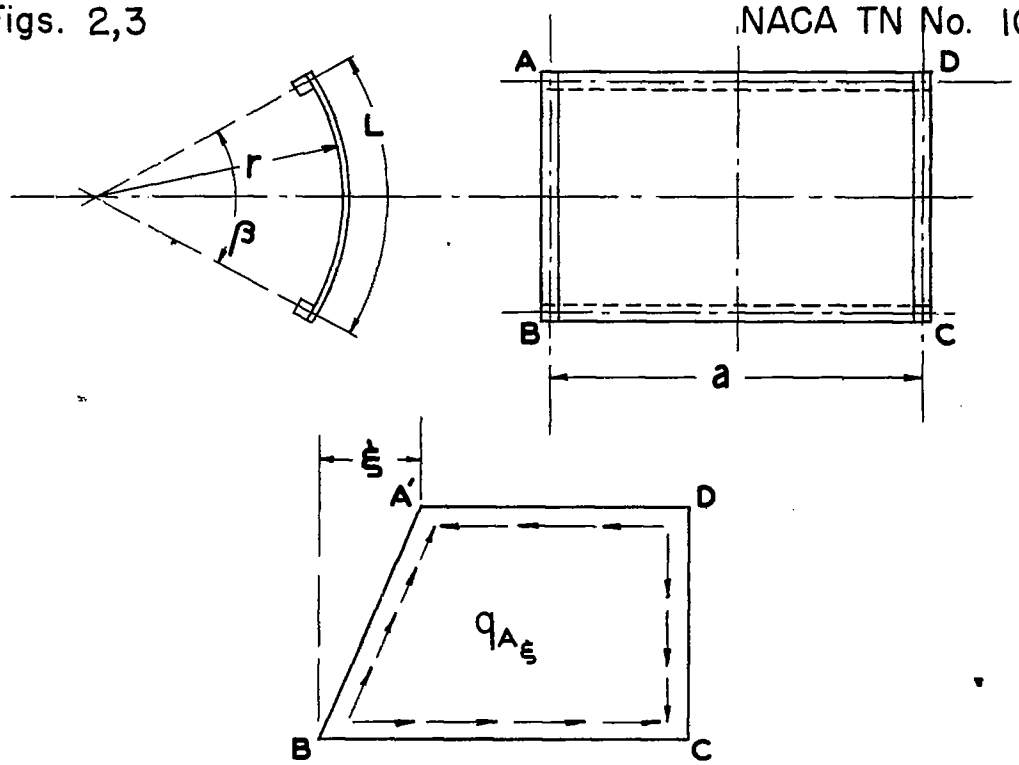


FIG. 2 UNIT AXIAL DISPLACEMENT OF A CORNER OF A PANEL

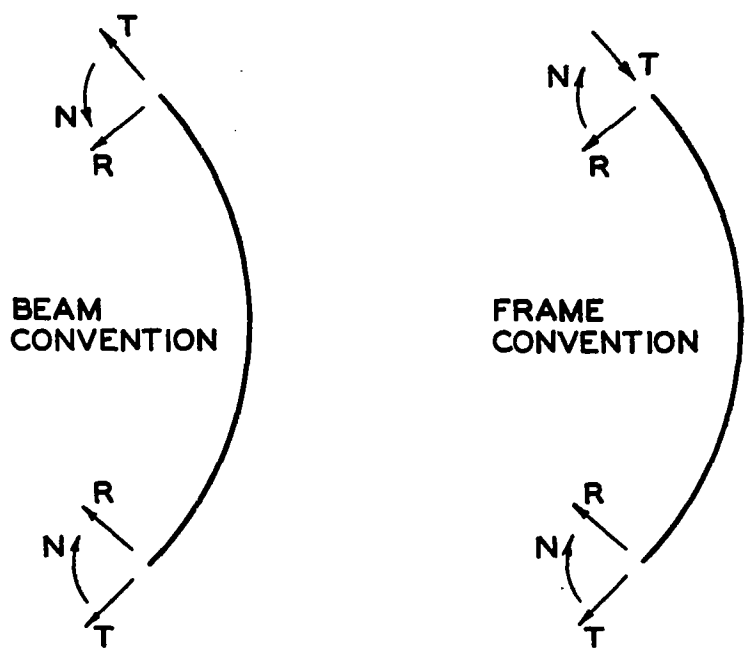


FIG. 3 SIGN CONVENTIONS

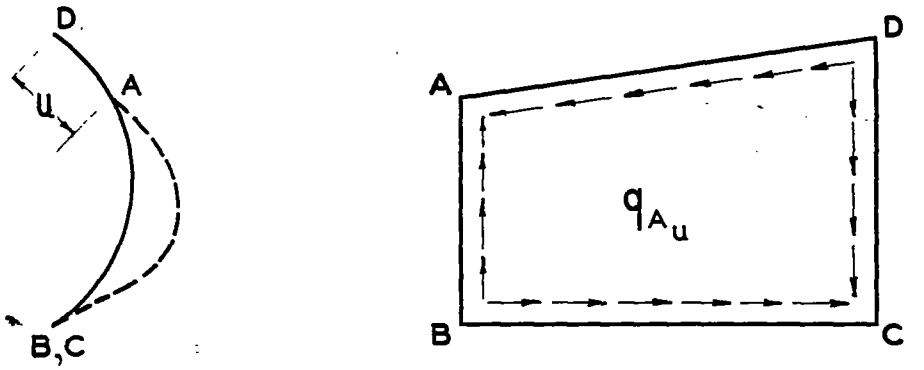


FIG. 4 UNIT TANGENTIAL DISPLACEMENT

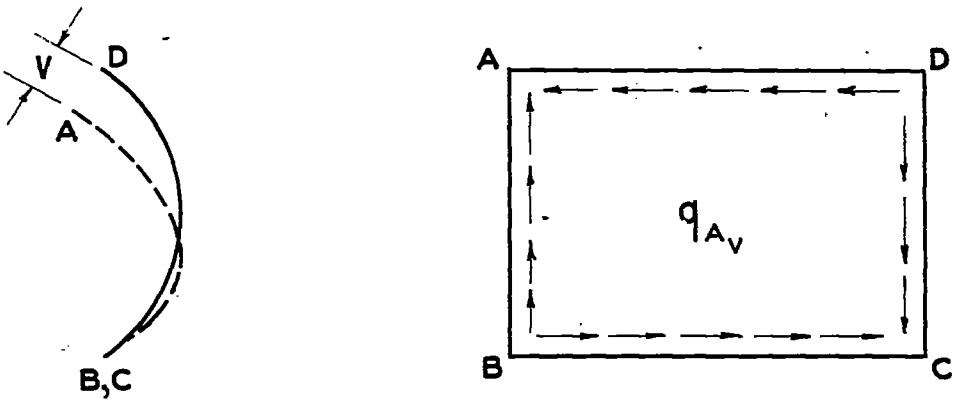


FIG. 5 UNIT RADIAL DISPLACEMENT

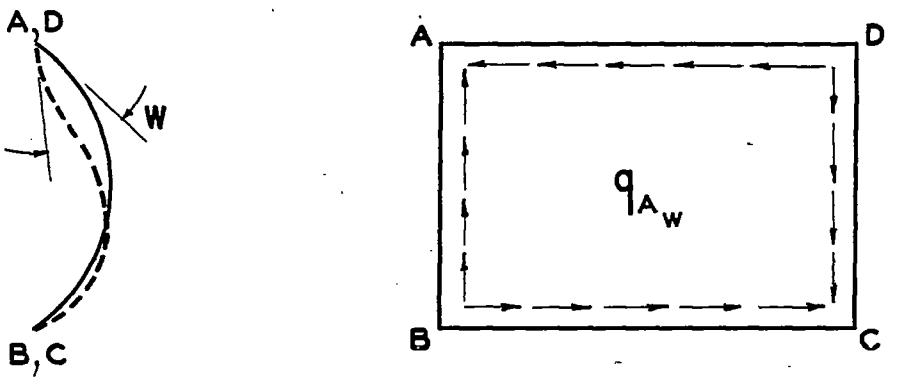


FIG. 6 UNIT ROTATION

FORCES AND MOMENTS ACTING ON CONSTRAINTS. FOR SIGNS SEE FIG. 10a.

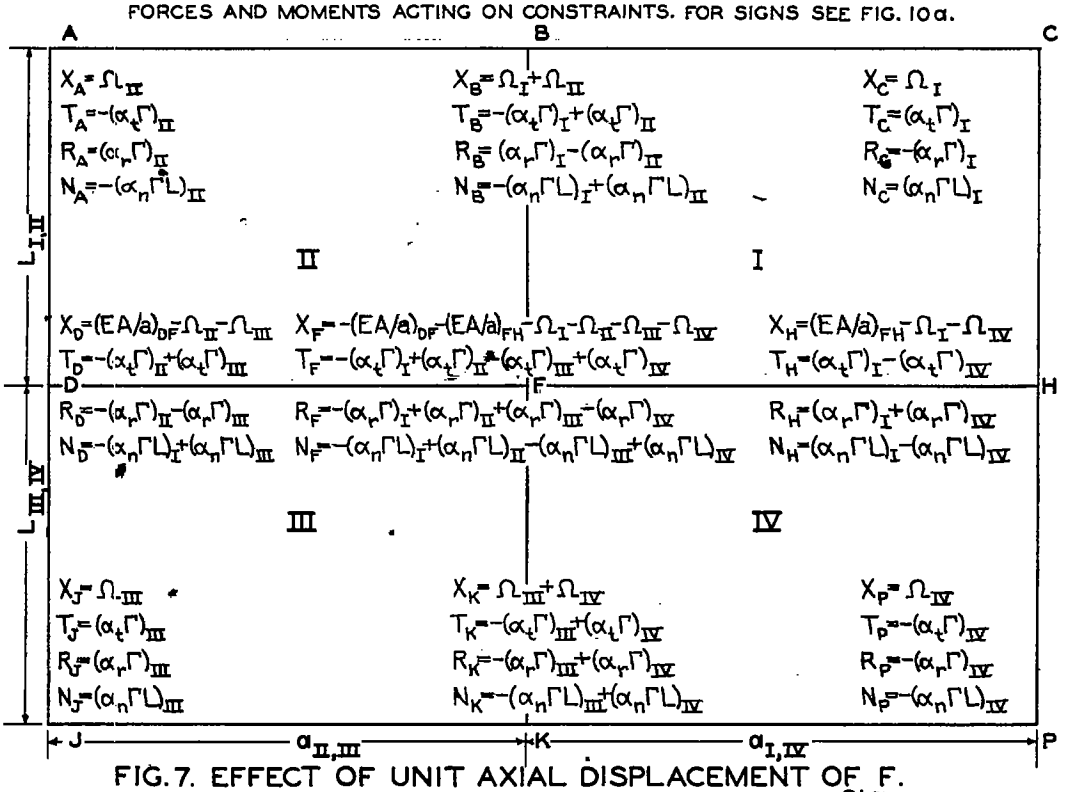


FIG. 7. EFFECT OF UNIT AXIAL DISPLACEMENT OF F.

$\Gamma=\frac{Gt}{2}$ $\Omega=\frac{Gta}{4L}$

FORCES AND MOMENTS ACTING ON CONSTRAINTS. FOR SIGNS SEE FIG. 10a.

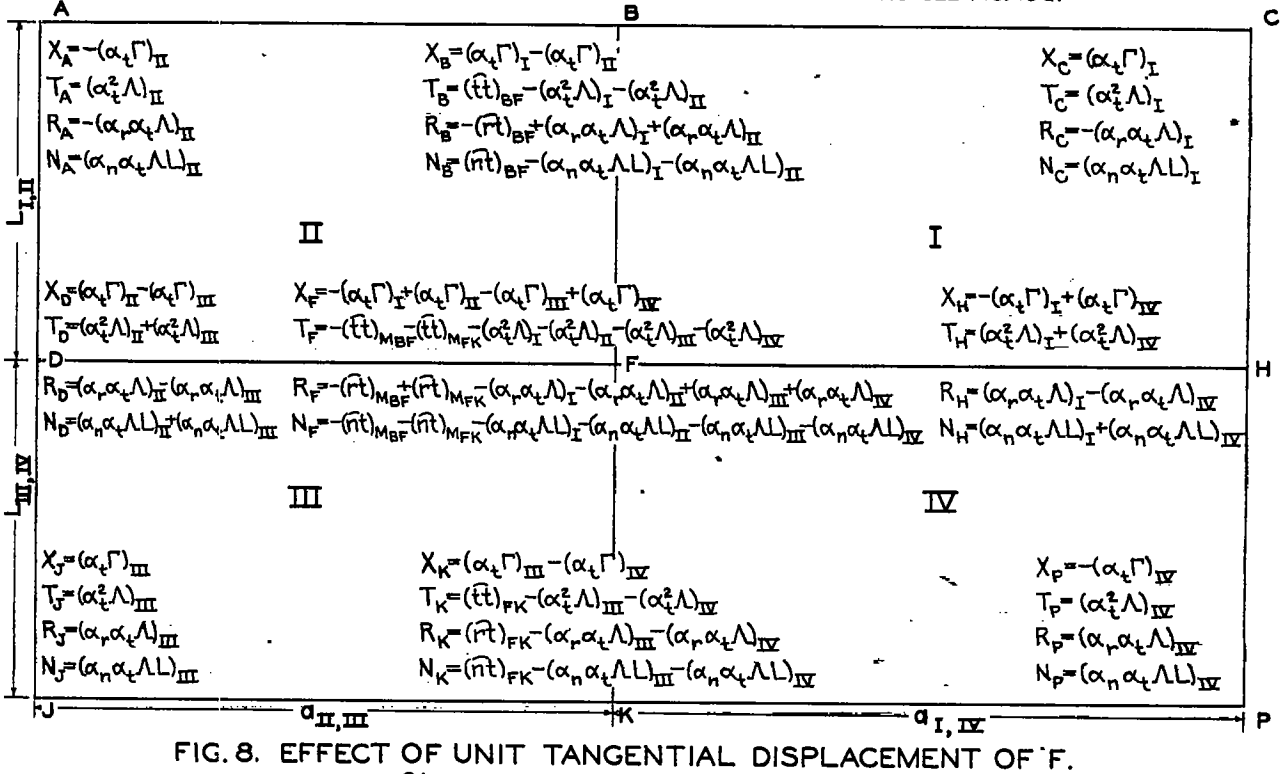


FIG. 8. EFFECT OF UNIT TANGENTIAL DISPLACEMENT OF F.

$\Gamma=\frac{Gt}{2}$ $\Lambda=\frac{GtL}{a}$

FORCES AND MOMENTS ACTING ON CONSTRAINTS. FOR SIGNS SEE FIG. 10 a.

| | | |
|---|---|---|
| A | B | C |
| $X_A=-(\alpha_r\Gamma)_{II}$<br>$T_A=(\alpha_t\alpha_r\Lambda)_{II}$<br>$R_A=-(\alpha_r^2\Lambda)_{II}$<br>$N_A=(\alpha_n\alpha_r\Lambda L)_{II}$ | $X_B=(\alpha_r\Gamma)_I-(\alpha_r\Gamma)_{II}$<br>$T_B=(\bar{t}r)_{BF}-(\alpha_t\alpha_r\Lambda)_I-(\alpha_t\alpha_r\Lambda)_{II}$<br>$R_B=-(\bar{r}r)_{BF}+(\alpha_r^2\Lambda)_I+(\alpha_r^2\Lambda)_{II}$<br>$N_B=(\bar{n}r)_{BF}-(\alpha_n\alpha_r\Lambda L)_I-(\alpha_n\alpha_r\Lambda L)_{II}$ | $X_C=(\alpha_r\Gamma)_I$<br>$T_C=(\alpha_r\alpha_t\Lambda)_I$<br>$R_C=-(\alpha_r^2\Lambda)_I$<br>$N_C=(\alpha_n\alpha_r\Lambda L)_I$ |
| II | | I |
| $X_D=(\alpha_r\Gamma)_{II}+(\alpha_r\Gamma)_{III}$<br>$T_D=(\alpha_t\alpha_r\Lambda)_{II}-(\alpha_t\alpha_r\Lambda)_{III}$ | $X_F=-(\alpha_r\Gamma)_I+(\alpha_r\Gamma)_{II}+(\alpha_r\Gamma)_{III}-(\alpha_r\Gamma)_{IV}$<br>$T_F=-(\bar{t}r)_{M_{BF}}+(\bar{t}r)_{M_{FK}}-(\alpha_t\alpha_r\Lambda)_I-(\alpha_t\alpha_r\Lambda)_{II}+(\alpha_t\alpha_r\Lambda)_{III}+(\alpha_t\alpha_r\Lambda)_{IV}$ | $X_H=-(\alpha_r\Gamma)_I-(\alpha_r\Gamma)_{IV}$<br>$T_H=(\alpha_t\alpha_r\Lambda)_I-(\alpha_t\alpha_r\Lambda)_{IV}$ |
| D | F | H |
| $R_D=(\alpha_r^2\Lambda)_{II}+(\alpha_r^2\Lambda)_{III}$<br>$N_D=(\alpha_n\alpha_r\Lambda L)_{II}-(\alpha_n\alpha_r\Lambda L)_{III}$ | $R_F=-(\bar{r}r)_{M_{BF}}-(\bar{r}r)_{M_{FK}}-(\alpha_r^2\Lambda)_I-(\alpha_r^2\Lambda)_{II}-(\alpha_r^2\Lambda)_{III}-(\alpha_r^2\Lambda)_{IV}$<br>$N_F=-(\bar{n}r)_{M_{BF}}+(\bar{n}r)_{M_{FK}}-(\alpha_n\alpha_r\Lambda L)_I-(\alpha_n\alpha_r\Lambda L)_{II}+(\alpha_n\alpha_r\Lambda L)_{III}+(\alpha_n\alpha_r\Lambda L)_{IV}$ | $R_H=(\alpha_r^2\Lambda)_I+(\alpha_r^2\Lambda)_{IV}$<br>$N_H=(\alpha_n\alpha_r\Lambda L)_I-(\alpha_n\alpha_r\Lambda L)_{IV}$ |
| III | | IV |
| $X_J=-(\alpha_r\Gamma)_{III}$<br>$T_J=-(\alpha_t\alpha_r\Lambda)_{III}$<br>$R_J=-(\alpha_r^2\Lambda)_{III}$<br>$N_J=-(\alpha_n\alpha_r\Lambda L)_{III}$ | $X_K=(\alpha_r\Gamma)_{III}+(\alpha_r\Gamma)_{IV}$<br>$T_K=-(\bar{t}r)_{KF}+(\alpha_t\alpha_r\Lambda)_{III}+(\alpha_t\alpha_r\Lambda)_{IV}$<br>$R_K=-(\bar{r}r)_{KF}+(\alpha_r^2\Lambda)_{III}+(\alpha_r^2\Lambda)_{IV}$<br>$N_K=-(\bar{n}r)_{KF}+(\alpha_n\alpha_r\Lambda L)_{III}+(\alpha_n\alpha_r\Lambda L)_{IV}$ | $X_P=(\alpha_r\Gamma)_{IV}$<br>$T_P=-(\alpha_t\alpha_r\Lambda)_{IV}$<br>$R_P=-(\alpha_r^2\Lambda)_{IV}$<br>$N_P=-(\alpha_n\alpha_r\Lambda L)_{IV}$ |
| J | $a_{II,III}$ K | $a_{I,IV}$ P |

$L_{I,II}$ $L_{III,IV}$

FIG. 9. EFFECT OF UNIT RADIAL DISPLACEMENT OF F.

$\Gamma=\frac{Gt}{2}$ $\Lambda=\frac{GtL}{a}$

FORCES AND MOMENTS ACTING ON CONSTRAINTS. FOR SIGNS SEE FIG. 10 a.

| | | |
|---|---|---|
| A | B | C |
| $X_A=-(\alpha_n\Gamma L)_{II}$<br>$T_A=(\alpha_t\alpha_n\Lambda L)_{II}$<br>$R_A=-(\alpha_r\alpha_n\Lambda L)_{II}$<br>$N_A=(\alpha_n^2\Lambda L^2)_{II}$ | $X_B=(\alpha_n\Gamma L)_I-(\alpha_n\Gamma L)_{II}$<br>$T_B=(\bar{t}n)_{BF}-(\alpha_t\alpha_n\Lambda L)_I-(\alpha_t\alpha_n\Lambda L)_{II}$<br>$R_B=-(\bar{r}n)_{BF}+(\alpha_r\alpha_n\Lambda L)_I+(\alpha_r\alpha_n\Lambda L)_{II}$<br>$N_B=(\bar{n}n)_{BF}-(\alpha_n^2\Lambda L^2)_I-(\alpha_n^2\Lambda L^2)_{II}$ | $X_C=(\alpha_n\Gamma L)_I$<br>$T_C=(\alpha_t\alpha_n\Lambda L)_I$<br>$R_C=-(\alpha_r\alpha_n\Lambda L)_I$<br>$N_C=(\alpha_n^2\Lambda L^2)_I$ |
| II | | I |
| $X_D=(\alpha_n\Gamma L)_{II}-(\alpha_n\Gamma L)_{III}$<br>$T_D=(\alpha_t\alpha_n\Lambda L)_{II}+(\alpha_t\alpha_n\Lambda L)_{III}$ | $X_F=-(\alpha_n\Gamma L)_I+(\alpha_n\Gamma L)_{II}-(\alpha_n\Gamma L)_{III}+(\alpha_n\Gamma L)_{IV}$<br>$T_F=-(\bar{t}n)_{M_{BF}}-(\bar{t}n)_{M_{FK}}-(\alpha_t\alpha_n\Lambda L)_I-(\alpha_t\alpha_n\Lambda L)_{II}-(\alpha_t\alpha_n\Lambda L)_{III}-(\alpha_t\alpha_n\Lambda L)_{IV}$ | $X_H=-(\alpha_n\Gamma L)_I+(\alpha_n\Gamma L)_{IV}$<br>$T_H=(\alpha_t\alpha_n\Lambda L)_I+(\alpha_t\alpha_n\Lambda L)_{IV}$ |
| D | F | H |
| $R_D=(\alpha_r\alpha_n\Lambda L)_{II}-(\alpha_r\alpha_n\Lambda L)_{III}$<br>$N_D=(\alpha_n^2\Lambda L^2)_{II}+(\alpha_n^2\Lambda L^2)_{III}$ | $R_F=-(\bar{r}n)_{M_{BF}}+(\bar{r}n)_{M_{FK}}-(\alpha_r\alpha_n\Lambda L)_I-(\alpha_r\alpha_n\Lambda L)_{II}+(\alpha_r\alpha_n\Lambda L)_{III}+(\alpha_r\alpha_n\Lambda L)_{IV}$<br>$N_F=-(\bar{n}n)_{M_{BF}}-(\bar{n}n)_{M_{FK}}-(\alpha_n^2\Lambda L^2)_I-(\alpha_n^2\Lambda L^2)_{II}-(\alpha_n^2\Lambda L^2)_{III}-(\alpha_n^2\Lambda L^2)_{IV}$ | $R_H=(\alpha_r\alpha_n\Lambda L)_I-(\alpha_r\alpha_n\Lambda L)_{IV}$<br>$N_H=(\alpha_n^2\Lambda L^2)_I+(\alpha_n^2\Lambda L^2)_{IV}$ |
| III | | IV |
| $X_J=(\alpha_n\Gamma L)_{III}$<br>$T_J=(\alpha_t\alpha_n\Lambda L)_{III}$<br>$R_J=(\alpha_r\alpha_n\Lambda L)_{III}$<br>$N_J=(\alpha_n^2\Lambda L^2)_{III}$ | $X_K=(\alpha_n\Gamma L)_{III}-(\alpha_n\Gamma L)_{IV}$<br>$T_K=(\bar{t}n)_{FK}-(\alpha_t\alpha_n\Lambda L)_{III}-(\alpha_t\alpha_n\Lambda L)_{IV}$<br>$R_K=(\bar{r}n)_{FK}-(\alpha_r\alpha_n\Lambda L)_{III}-(\alpha_r\alpha_n\Lambda L)_{IV}$<br>$N_K=(\bar{n}n)_{FK}-(\alpha_n^2\Lambda L^2)_{III}-(\alpha_n^2\Lambda L^2)_{IV}$ | $X_P=-(\alpha_n\Gamma L)_{IV}$<br>$T_P=(\alpha_t\alpha_n\Lambda L)_{IV}$<br>$R_P=(\alpha_r\alpha_n\Lambda L)_{IV}$<br>$N_P=(\alpha_n^2\Lambda L^2)_{IV}$ |
| J | $a_{II,III}$ K | $a_{I,IV}$ P |

$L_{I,II}$ $L_{III,IV}$

FIG. 10. EFFECT OF UNIT ROTATION OF F.

$\Gamma=\frac{Gt}{2}$ $\Lambda=\frac{GtL}{a}$

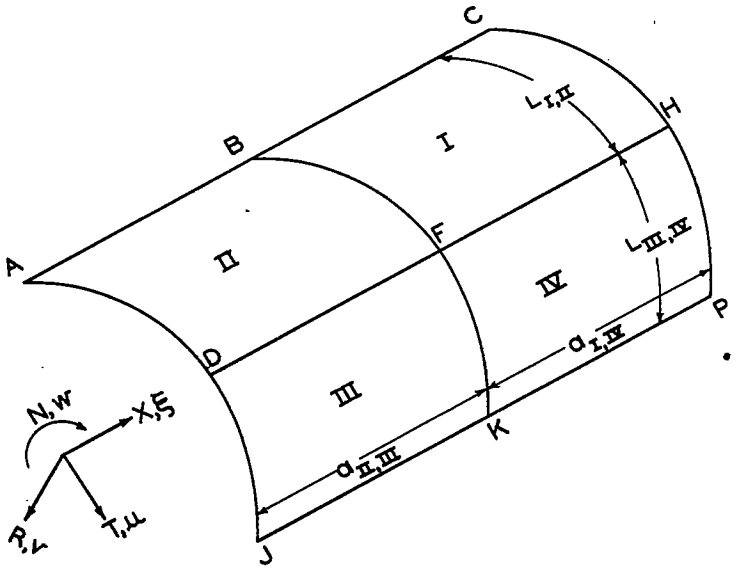


FIG. 10.a. SIGN CONVENTION FOR FIGS. 7 – 10.

SIMPLIFIED CYLINDER

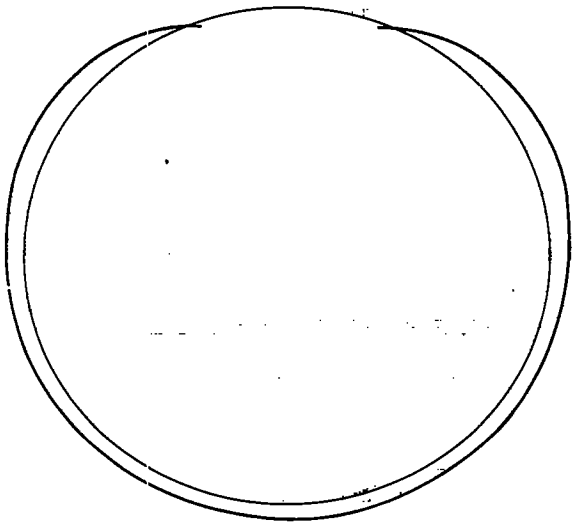

FIG. 13. DEFLECTIONS OF CUT RING FOR PURE BENDING.

M = 6155.4 IN. LB.

SIMPLIFIED CYLINDER

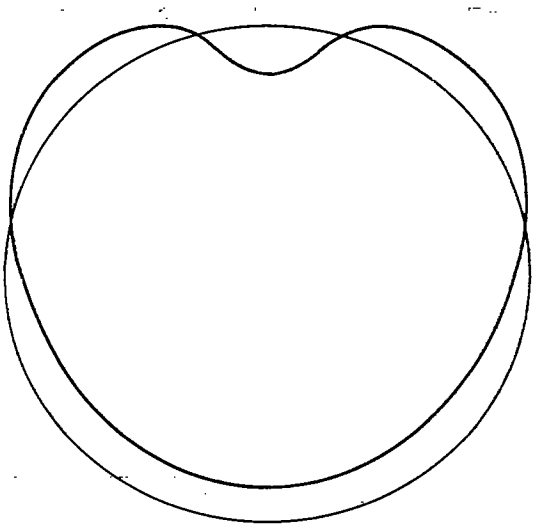

FIG. 14. DEFLECTIONS OF COMPLETE RING FOR PURE BENDING.

M = 6155.4 IN. LB.

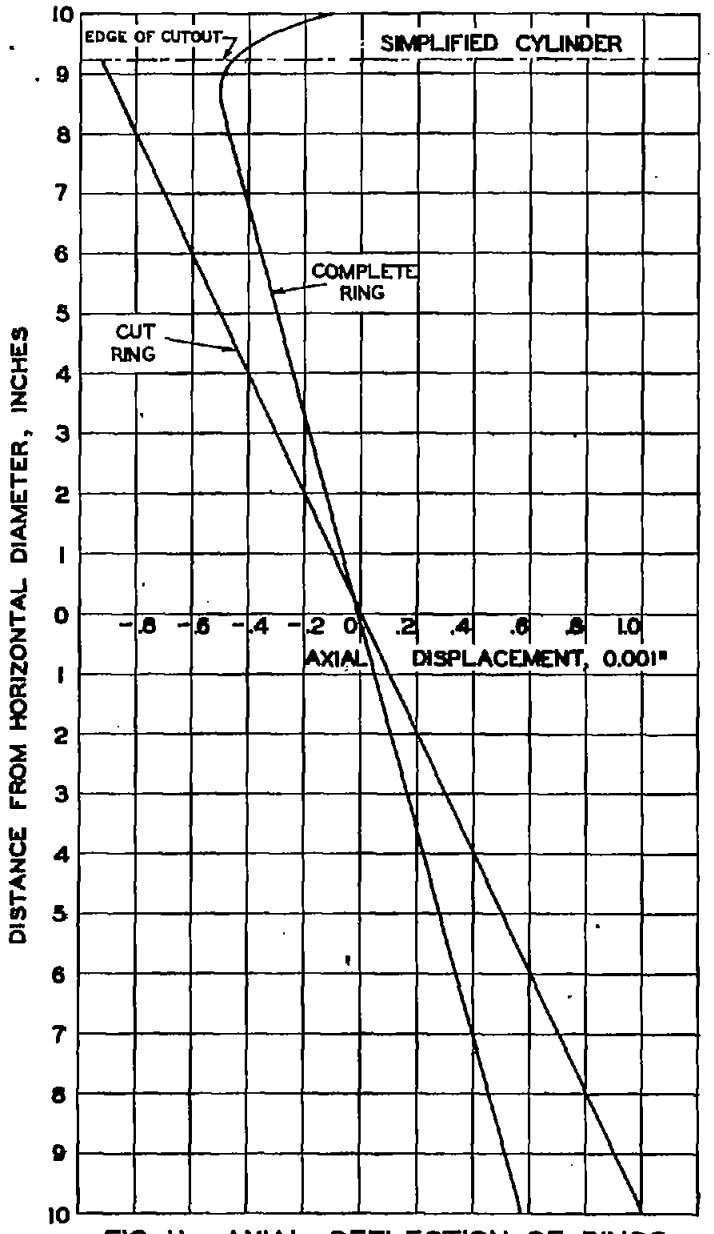


FIG. 11. AXIAL DEFLECTION OF RINGS
PURE BENDING M = 6155.4 IN. LB.

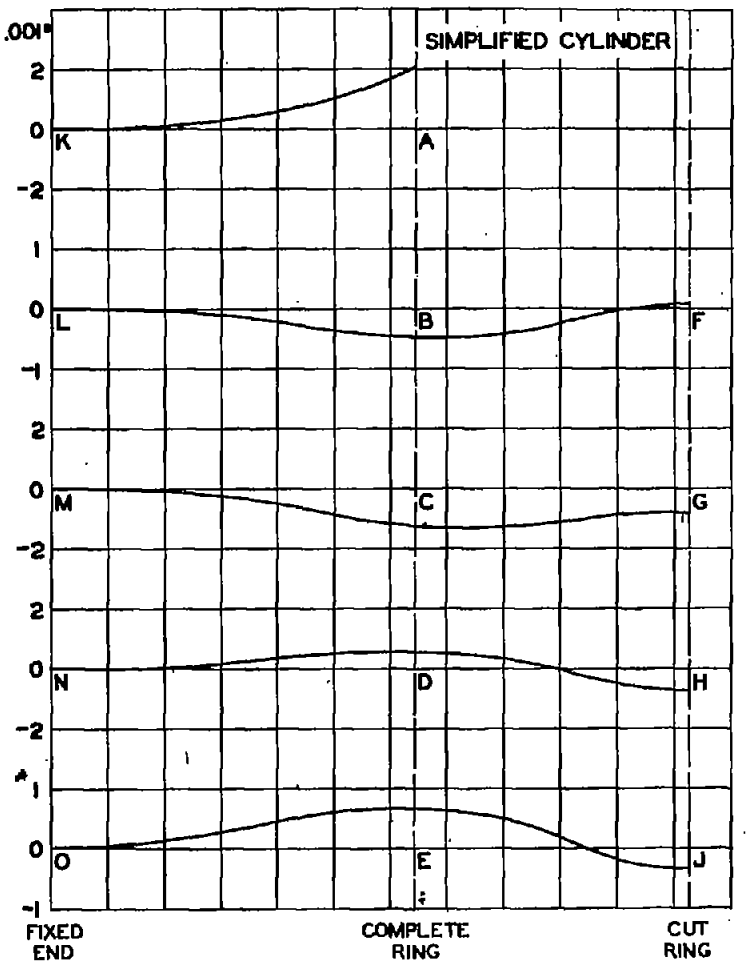


FIG. 12. RADIAL DEFLECTIONS FOR STRINGERS DUE TO PURE BENDING.

M = 6155.4 IN. LB.

POSITIVE SIGN INDICATES INWARD DEFLECTION

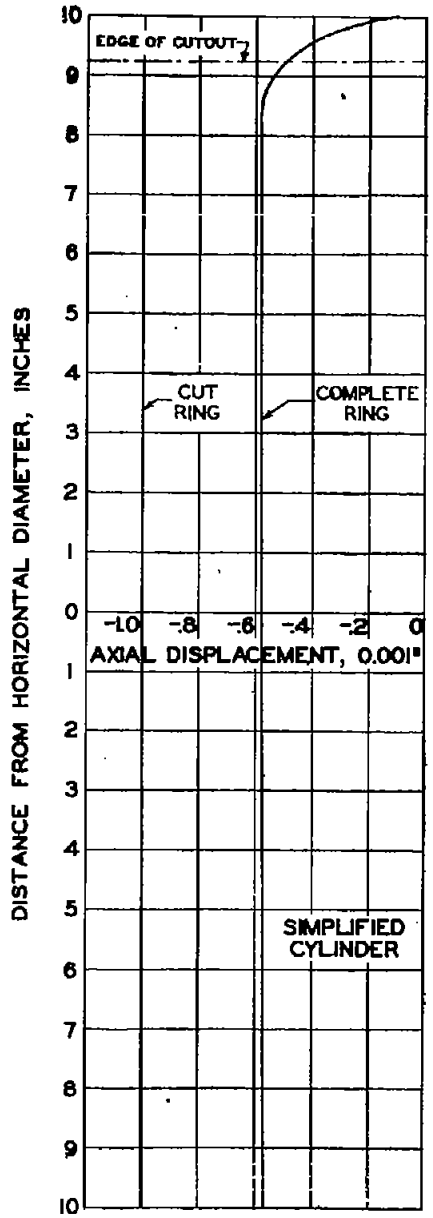


FIG. 15. AXIAL DEFLECTION OF RINGS

COMPRESSION P = -1286 LB.

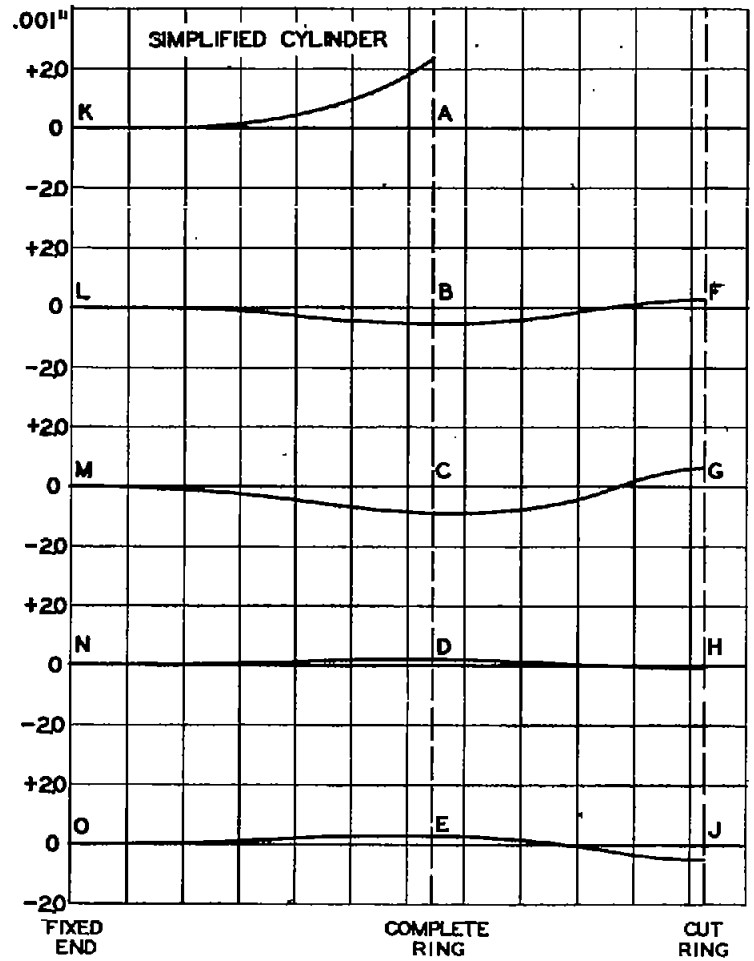


FIG. 16. RADIAL DEFLECTIONS FOR STRINGERS DUE TO PURE COMPRESSION.

P = -1286 LB.

POSITIVE SIGN INDICATES INWARD DEFLECTION

SIMPLIFIED CYLINDER

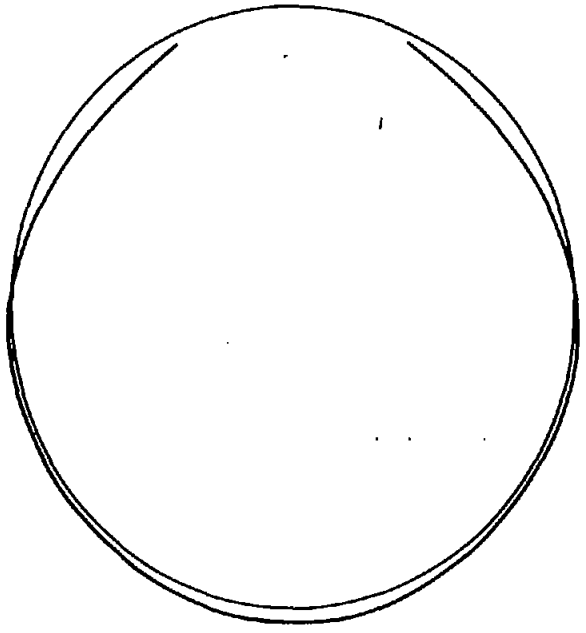

FIG. 17. DEFLECTIONS OF CUT RING FOR PURE COMPRESSION.

P = -1286 LB.

SIMPLIFIED CYLINDER

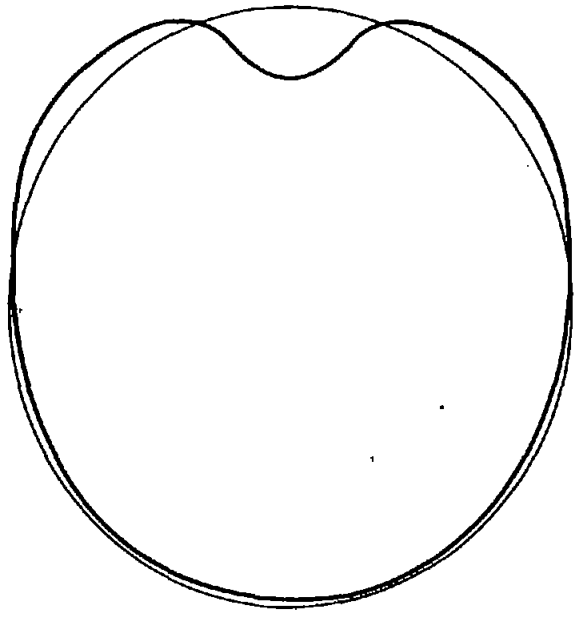

FIG. 18. DEFLECTIONS OF COMPLETE RING FOR PURE COMPRESSION.

P = -1286 LB.

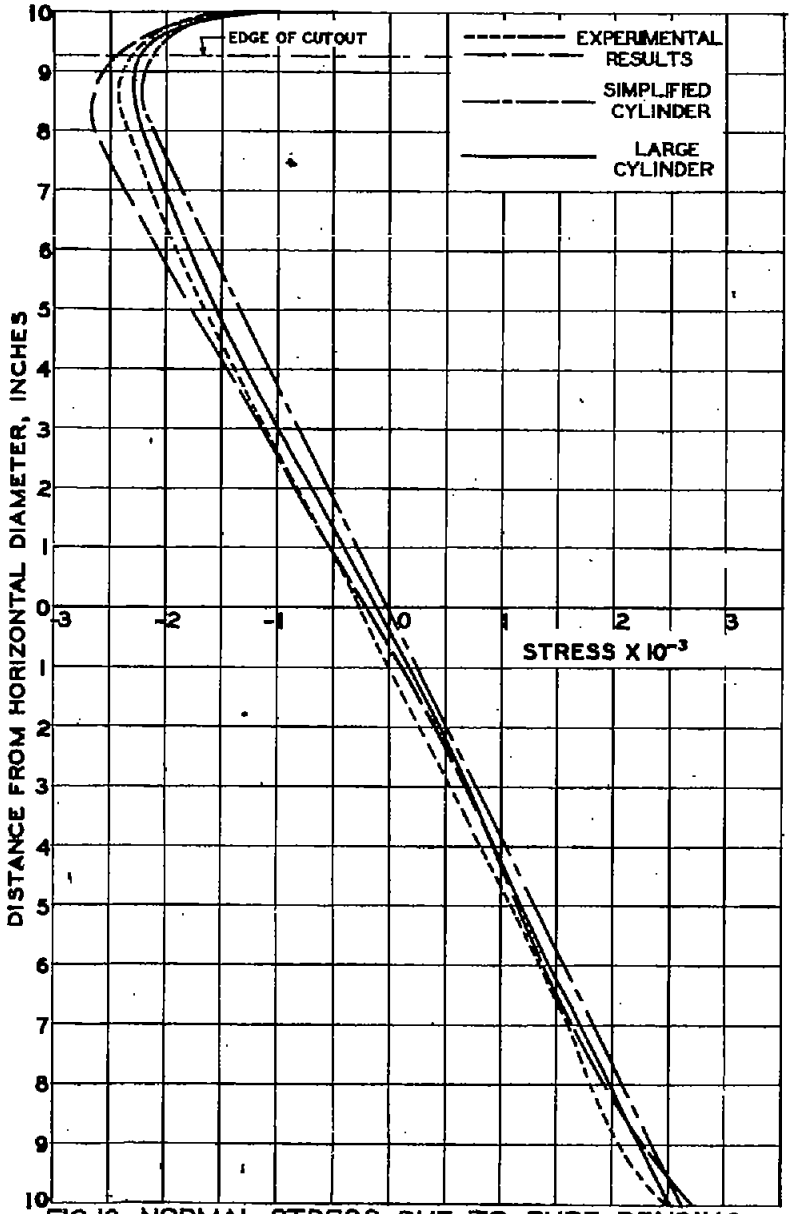


FIG.19 NORMAL STRESS DUE TO PURE BENDING COMPLETE FIELD
M = 35,000 IN.LB.

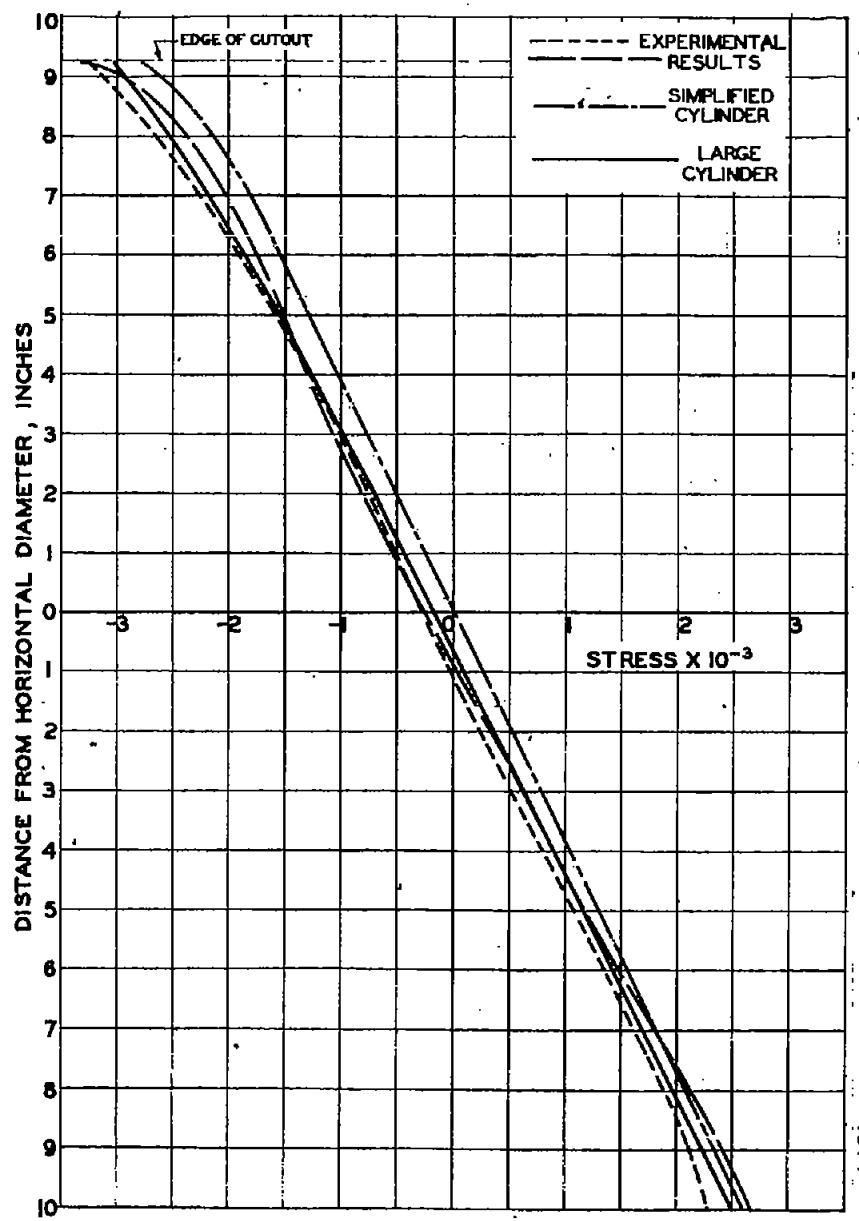


FIG. 20. NORMAL STRESS DUE TO PURE BENDING - CUT FIELD.
M = 35,000 IN. LB.

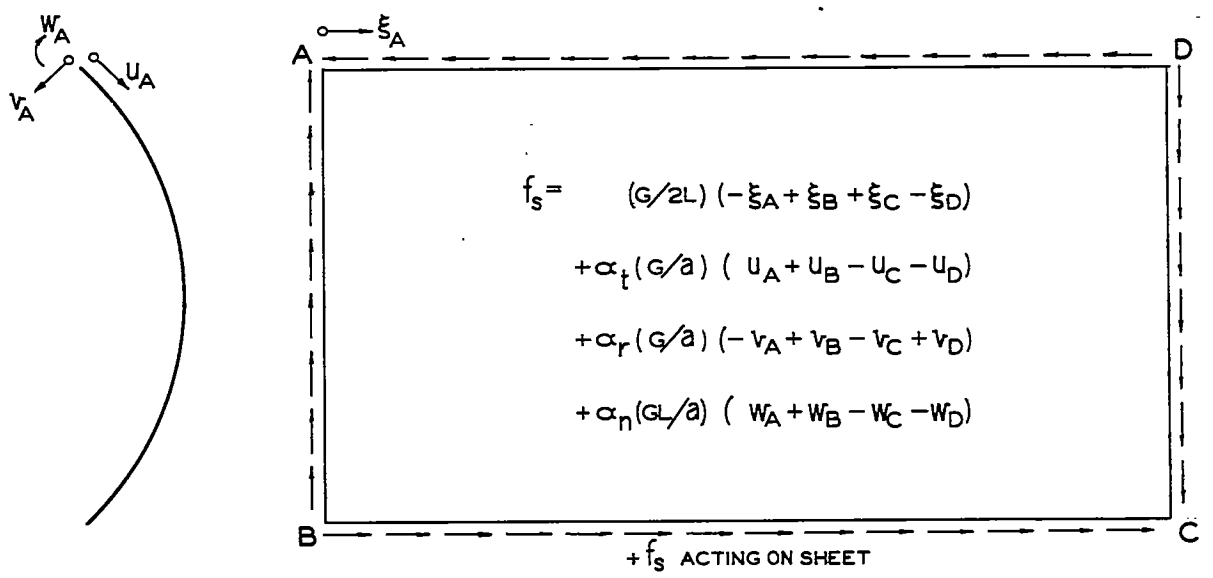


FIG. 23 CALCULATION OF THE SHEAR STRESS

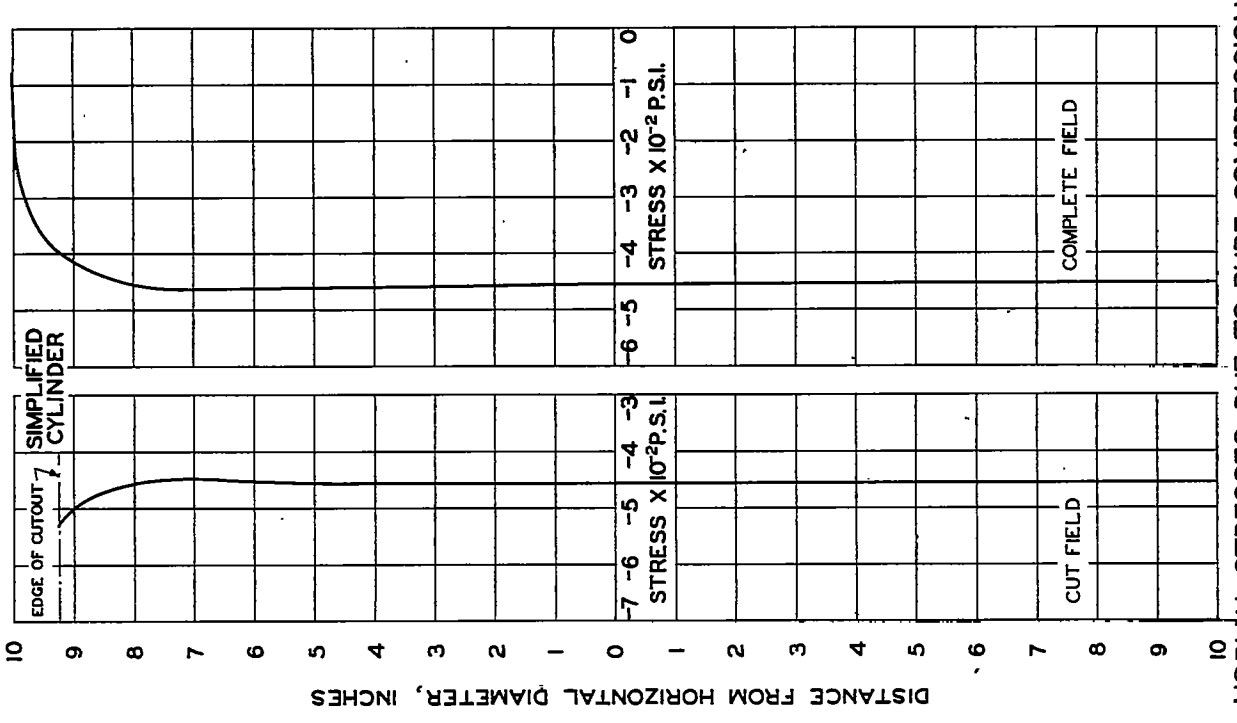


•NORMAL STRESSES DUE TO PURE COMPRESSION
P = -1286 LB.

FIG. 21 FIG. 22

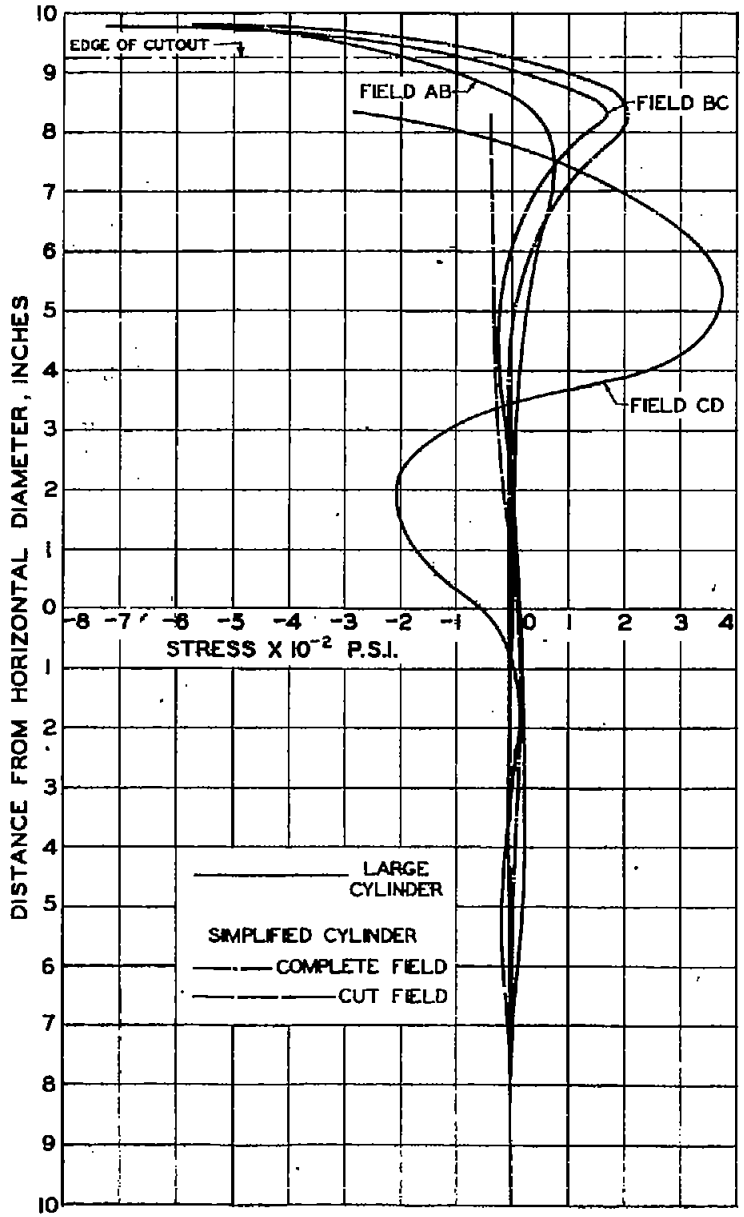


FIG. 24. SHEARING STRESS DUE TO PURE BENDING
M = 35,000 IN. LB.

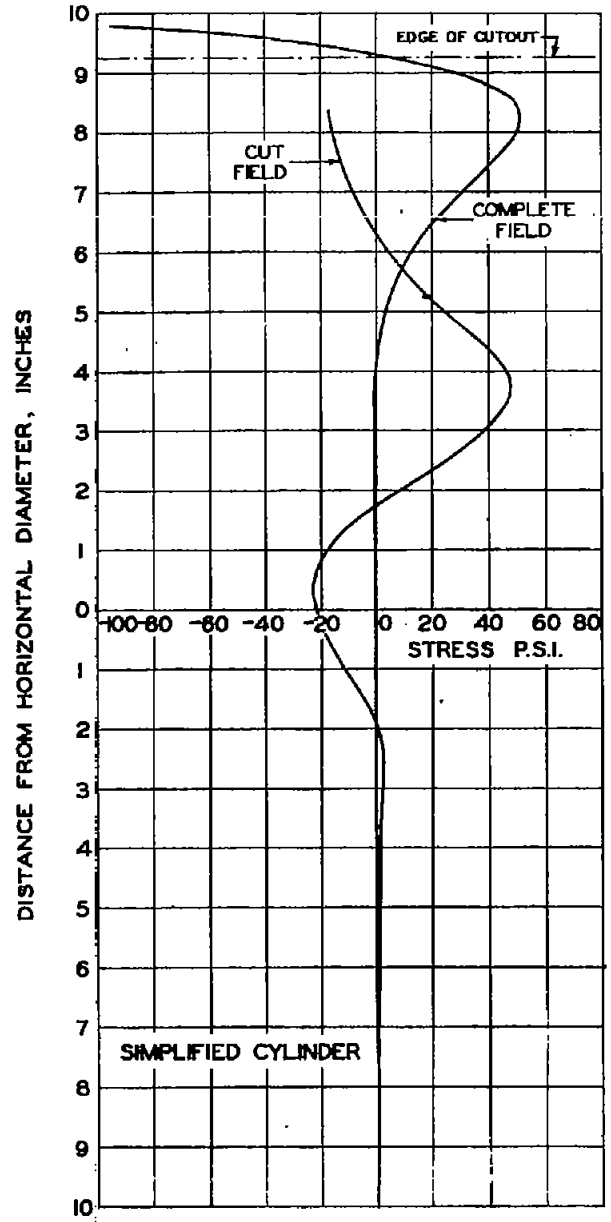


FIG. 25. SHEARING STRESS DUE TO PURE COMPRESSION
P = -1286 LB.

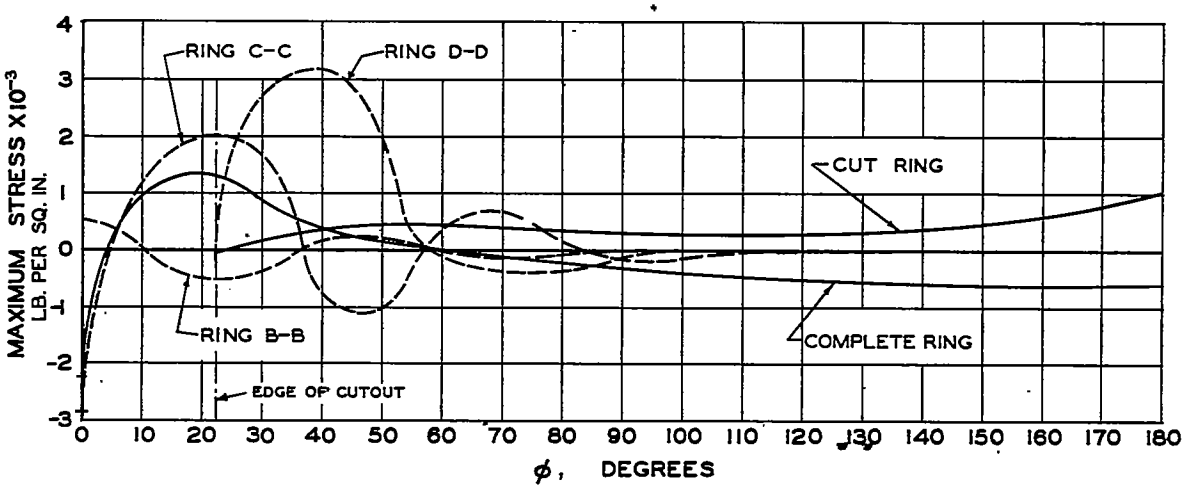


FIG. 26. BENDING STRESSES IN RINGS

PURE BENDING M = 35,000 IN. LB.

——— SIMPLIFIED CYLINDER -·-·-·- LARGE CYLINDER

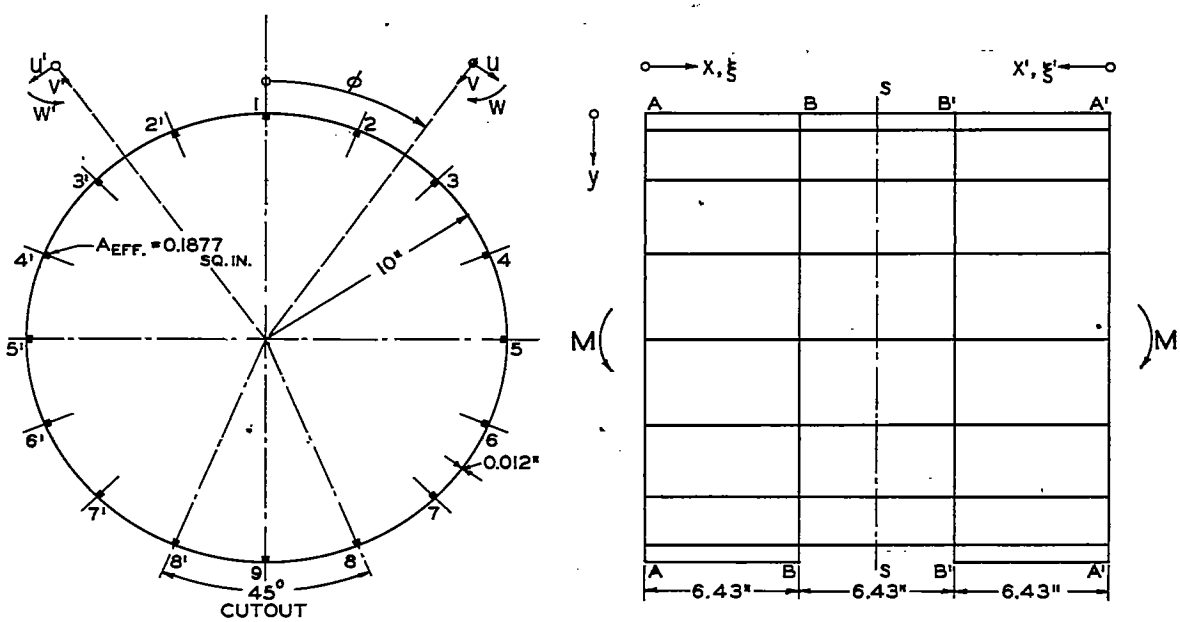


FIG. 27. SMALL CYLINDER

SHEET : 24 ST ALCLAD
REINFORCEMENTS : 24 ST ALUM. ALLOY

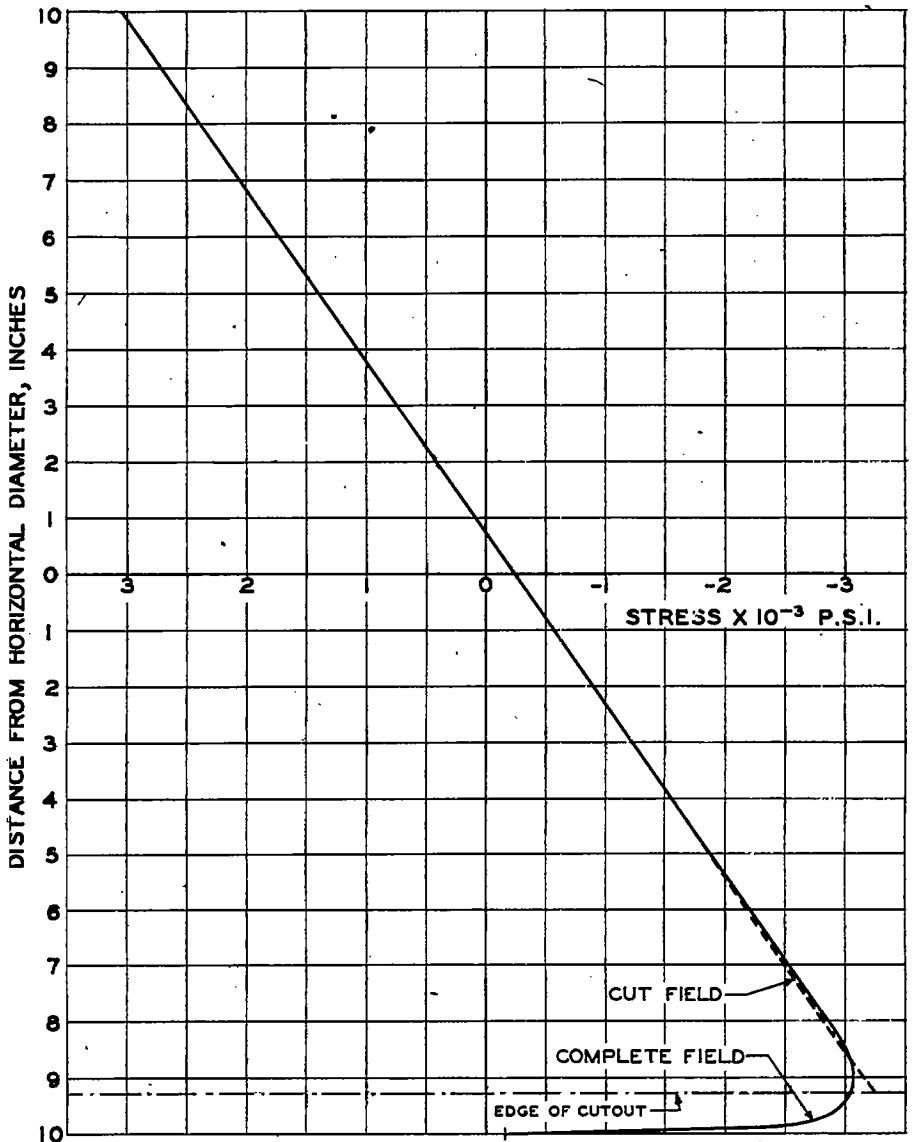


FIG. 28. NORMAL STRESSES FOR SMALL CYLINDER.
M= 42 000 IN. LB.

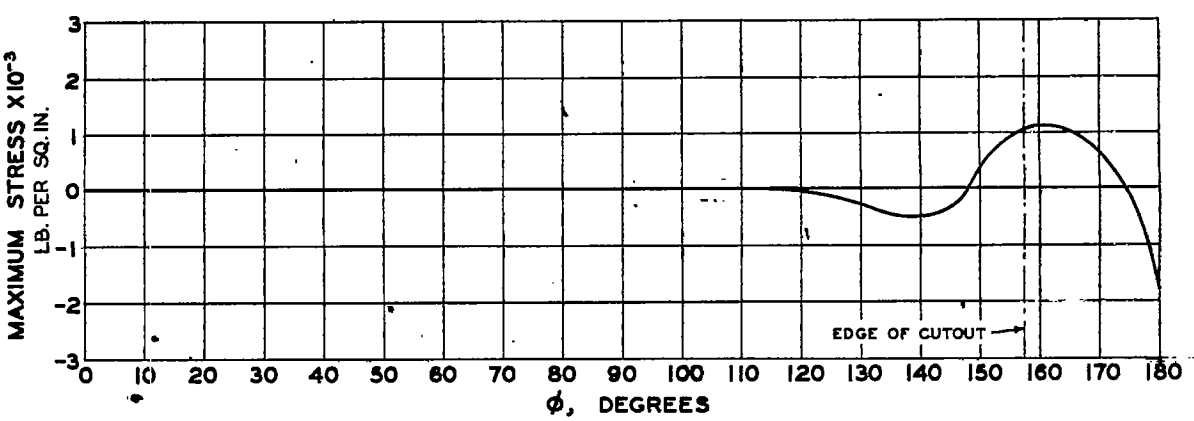


FIG. 29. BENDING STRESS IN RING FOR SMALL CYLINDER.
M = 42 000 IN. LB.

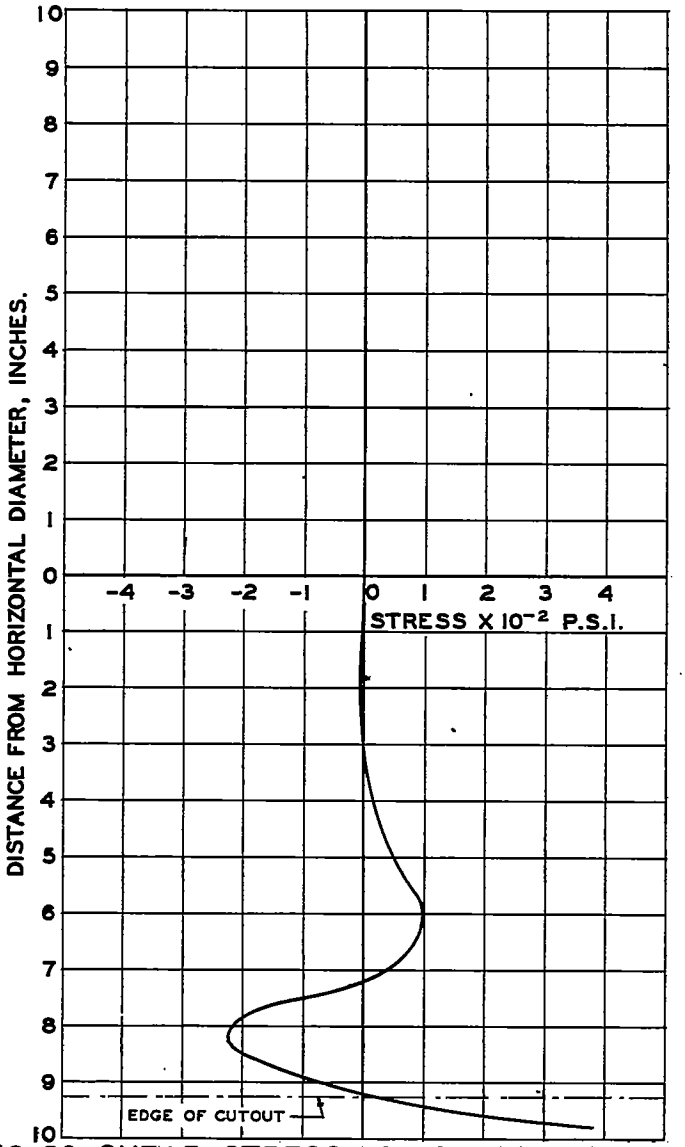


FIG. 30. SHEAR STRESS FOR SMALL CYLINDER.
M = 42 000 IN. LB.

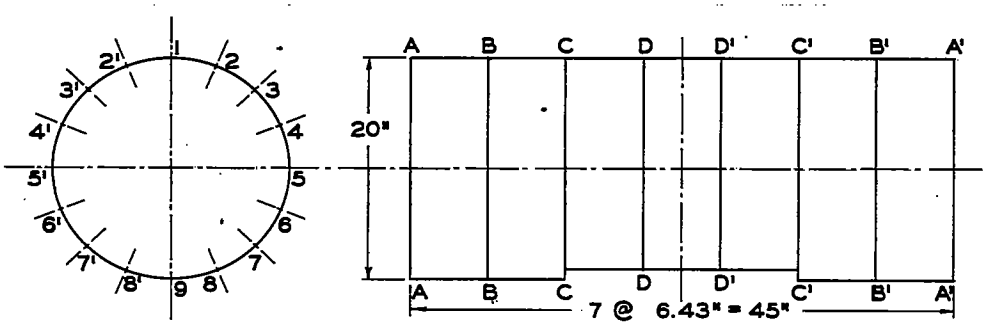


FIG. 31. NOTATION FOR LARGE CYLINDER

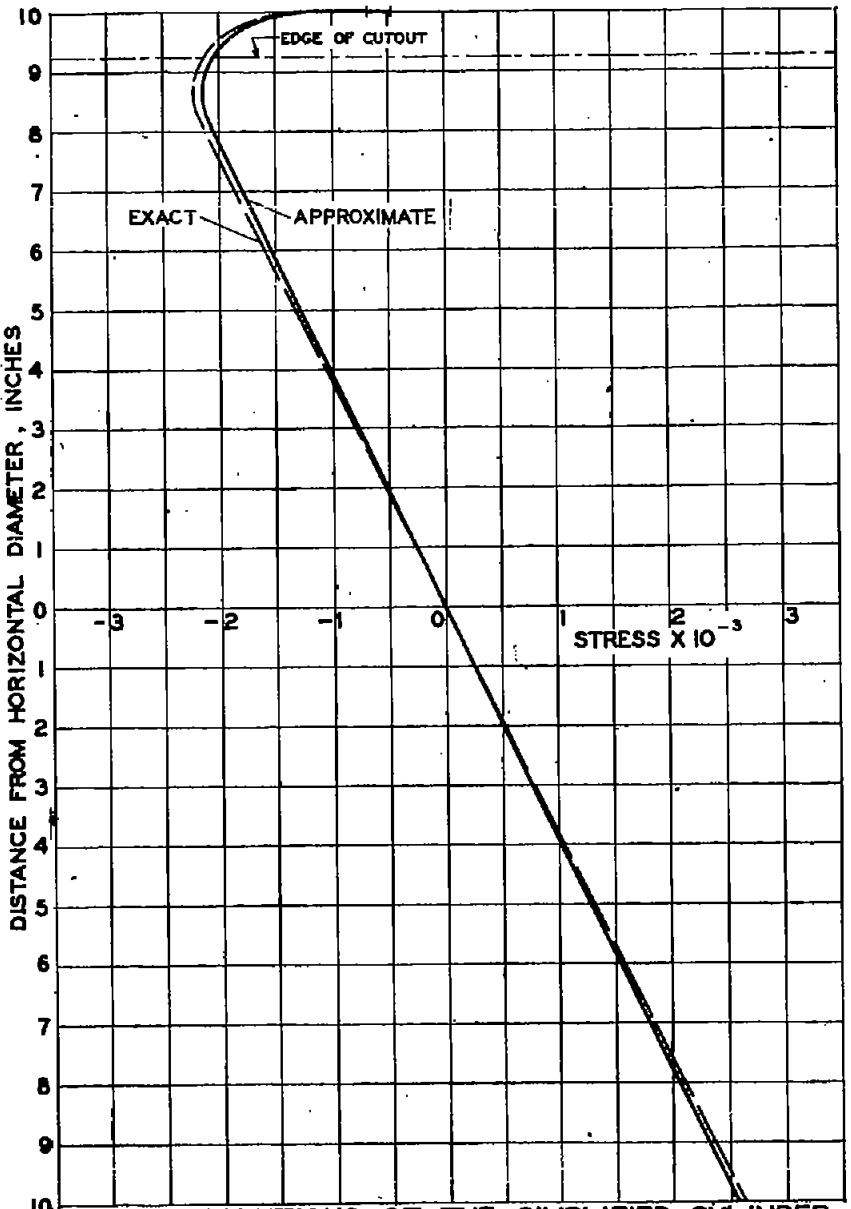


FIG. 32 SOLUTIONS OF THE SIMPLIFIED CYLINDER
COMPLETE FIELD
M= 35,000 IN. LB.

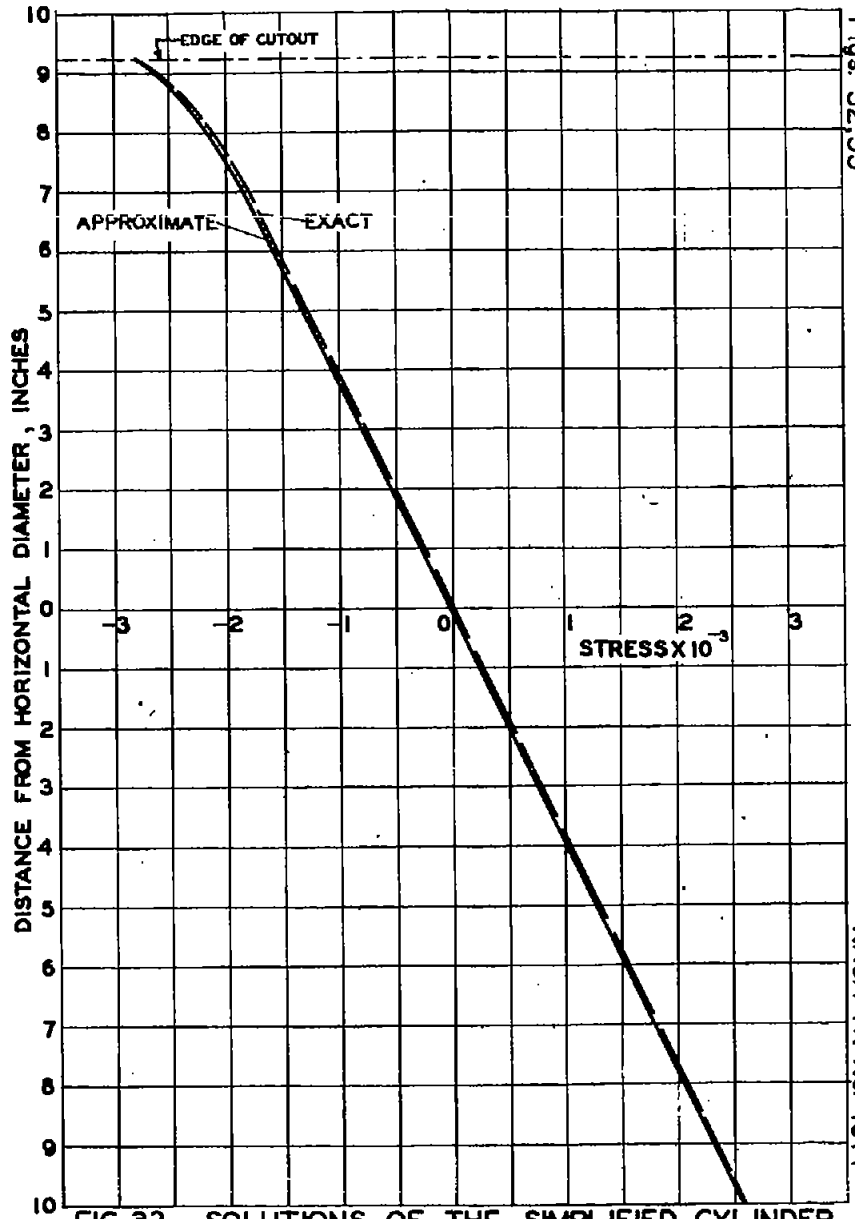


FIG. 33 SOLUTIONS OF THE SIMPLIFIED CYLINDER
CUT FIELD
M= 35,000 IN. LB.