NACA
CLASSIFICATION CANCELLED

NATIONAL ADVISORY COMMITTEE FOR AERONAUTICS

TECHNICAL NOTE

No. 983

AXIAL FATIGUE TESTS AT TWO STRESS AMPLITUDES OF 0.032-INCH 24S-T SHEET SPECIMENS WITH A CIRCULAR HOLE

By W. C. Brueggeman, M. Mayer, Jr., and W. H. Smith
National Bureau of Standards

Washington
July 1945

LABORATORY
Field, Va.

CLASSIFIED DOCUMENT

This document contains classified information affecting the National Defense of the United States within the meaning of the Espionage Act, USC 50:31 and 32. Its transmission or the revelation of its contents in any manner to an unauthorized person is prohibited by law. Information so classified may be imparted only to persons in the military and naval Services of the United States, appropriate civilian officers and employees of the Federal Government who have a legitimate interest therein, and to United States citizens of known loyalty and discretion who of necessity must be informed thereof.

NASA Technical Library
3 1176 01433 2879

NATIONAL ADVISORY COMMITTEE FOR AERONAUTICS

TECHNICAL NOTE NO. 983

AXIAL FATIGUE TESTS AT TWO STRESS AMPLITUDES OF 0.032-INCH 24S-T SHEET SPECIMENS WITH A CIRCULAR HOLE

By W. C. Brueggeman, M. Mayer, Jr., and W. H. Smith

SUMMARY

The effect of applying n_1 cycles of a high fatigue stress S_1 followed by n_2 cycles of a relatively low stress S_2 to failure and vice versa has been investigated on 93 drilled specimens of 0.032-inch 24S-T sheet. The sum of the "cycles ratios" $\frac{n_1}{N_1} + \frac{n_2}{N_2}$ where N_1 and N_2 correspond to S_1 and S_2 on the SN curve was found to be greater than unity if the low stress was applied first, and less than unity if the higher stress was applied first. For $\frac{n_1}{N_1} = 0.25$, $\frac{n_2}{N_2}$ exceeded unity when the low stress was applied first, indicating a beneficial effect of understressing. Thus the sum of the cycle ratios appears to be an inadequate criterion of fatigue performance. Obviously, the sequence of applying different stress amplitudes must also be considered.

INTRODUCTION

Most of the available fatigue data for aircraft metals have been obtained with constant stress amplitude. Fatigue loads in aircraft are usually variable in character. Obviously there are periods in which the load amplitude is alternately high and low in groups of cycles or even in the same cycle. There are so many possible variations that it would be impracticable to make enough tests to determine the fatigue strength under every conceivable loading condition. However, there is some hope of determining certain principles of the fatigue behavior of metals under variable

stress amplitude. A beginning has been made for ferrous metals in determining damage lines (reference 1) and the effects of understressing and overstressing on the endurance limit.

Perhaps the most important problem is to determine the number of cycles to failure under the condition of loading shown in figure 1, in which n_1 cycles with a stress amplitude S_1 are followed by n_2 cycles with a stress amplitude S_2 ..., and so forth, until failure occurs after n_n cycles at stress amplitude S_n. The problem is to determine the total number of cycles to failure

$$N = n_1 + n_2 + \ldots + n_n \tag{1}$$

The following simple formula has been used by L. H. Donnell, William H. Bleakney, and others (no published reference could be found) for determining N from the usual S-N curve of the material.

$$\frac{n_1}{N_1} + \frac{n_2}{N_2} + \ldots + \frac{n_n}{N_n} = 1 \tag{2}$$

where N_1, N_2, ... N_n are obtained from the S-N curve as the cycles to failure at a constant stress amplitude S_1, S_2, ... S_n.

Equation (2) may be criticized on the ground that it makes no allowances for the beneficial effect of stresses below the fatigue limit (reference 1), since all terms are positive and therefore decrease the fatigue life. Langer (reference 2) tried to overcome this difficulty by replacing the S-N curve by the damage line and by adding negative terms to the sum. However, the procedure introduces a number of additional unknowns and it would be difficult to apply to materials such as aluminum alloys which do not have a definite fatigue limit.

Both Biezeno's and Langer's formulas gives an answer for the total number of cycles to failure which depends only on the distribution of cycles n_1, n_2, ..., n_n and not on their sequence. Thus, the same number of cycles to failure would be obtained according to the formulas with stress amplitudes increasing with time as with stress

amplitudes decreasing with time, provided the number of cycles for each stress amplitude is the same.

In view of the practical importance of the problem, the National Advisory Committee for Aeronautics has authorized a research project at the National Bureau of Standards to determine the effect on fatigue life of varying the stress amplitude and to compare the observed effect with that given by simple formulas such as equation (2).

TESTS

All tests were made on coupons (fig. 2) machined from 0.032-inch 24S-T sheet. The static tensile and compressive properties of the sheet, typical stress-strain curves, and S-N curves obtained on both plain and drilled coupons are given in reference 3 (sheet B). The stress-strain and S-N curves are reproduced in figures 3 and 4. The S-N curves of figure 4 cover two 0.032-inch 24S-T sheets A and B and an 0.064-inch sheet C but are quite representative of sheet B from which the specimens for the present investigation were taken. In the present investigation the purpose of the circular-hole stress raiser was to simulate more closely conditions in an actual structure where stress raisers are invariably present. The hole has the added advantage of reducing the scatter of the results as shown in reference 3.

All tests were made under axial load in a lever-type machine shown in figure 5 and described in reference 3. The mean stress was zero. Lateral guides described in reference 4 restrained the specimen against buckling during the compression half of the cycle.

The procedure consisted of applying n_1 cycles of load at stress S_1 then changing the stress to S_2 until failure at n_2 cycles. The number of cycles n_1 was selected so that n_1/N_1 was equal to about 1/4, 1/2, or 3/4.

A stress of 38,500 pounds per square inch, computed on the net area of a cross section through the hole, was selected for the higher value and 18,000 pounds per square inch for the lower. These corresponded to $N = 963$ and 203,000 cycles, respectively. These particular stresses were selected because one-fourth the corresponding number of cycles was about the minimum which could easily be determined accurately in

the case of the higher stress; failure occurred at the lower stress within a reasonable length of time and the S-N curve at $N = 203,000$ cycles had sufficient slope so that the scatter of the S-N data would not make N too uncertain. The values of N for these two stresses were obtained by averaging the S-N results for about a dozen specimens at each stress. The higher stress was applied first for about half the specimens and the lower was applied first for the other half. At the higher stress the crank of the machine was turned by hand where this was necessary to obtain the required accuracy in determining N. From 14 to 18 specimens were tested under each combination and sequence of loads.

RESULTS AND DISCUSSION

The results are given in table 2; the average for each loading condition is plotted in figure 6. The sum of the two terms $\frac{n_1}{N_1} + \frac{n_2}{N_2}$ was greater than unity when the low stress was applied first and less than unity when the high stress was applied first. For $\frac{n_1}{N_1} = 0.25$, $\frac{n_2}{N_2}$ was actually greater than 1 when the low stress was applied first; this indicates an improvement in the high-stress performance as a result of prestressing at the lower value. In general, the results are concordant with a statement of Bollenrath, reference 5, who in referring to investigations carried out by Teichmann and Gassner on steel and duralumin structural members stated: "... the stress scale which can be endured at a given number of cycles increases in this order; regularly falling, alternately rising and falling and regularly rising limits. In this way the stress scale or unit may increase about 70 percent to 80 percent."

CONCLUDING REMARKS

Axial fatigue tests in which specimens were loaded for several fixed portions of their fatigue life at a low stress followed by loading at a higher stress to failure and vice versa showed considerably higher endurance when the low stress was applied first than when the high stress was applied first.

Although the results of this investigation, which were obtained for only two stress amplitudes, may not be sufficient to support general conclusions regarding the effect on the endurance of the sequence of applying fatigue stresses of different amplitude it seems clear than any general formula for endurance must take sequence into consideration. A simple formula such as equation (1) is inadequate to describe the endurance when many cycles at low stress amplitude are followed by many cycles at high stress amplitude.

National Bureau of Standards,
Washington, D. C., Jan. 27, 1945.

REFERENCES

1. French, H. J.: Fatigue and the Hardening of Steels. Trans. A.S.S.T., vol. 21, October 1933, p. 899.

2. Langer, B. F.: Fatigue Failure from Stress Cycles of Varying Amplitude. A.S.M.E. Jour. Applied Mechanics, vol. 4, no. 4, December 1937, pp. 160-162.

3. Brueggeman, W. C., Mayer, M, Jr., and Smith, W. H.: Axial Fatigue Tests at Zero Mean Stress of 24S-T Aluminum-Alloy Sheet with and without a Circular Hole. NACA TN No. 955, 1944.

4. Brueggeman, W. C. and Mayer, M., Jr.: Guides for Preventing Buckling in Axial Fatigue Tests of Thin Sheet-Metal Specimens. NACA TN No. 931, 1944.

5. Bollenrath, F.: Factors Influencing the Fatigue Strength of Materials. NACA TM No. 987, 1941.

TABLE 1.- TENSILE AND COMPRESSIVE PROPERTIES OF

0.032-INCH 24S-T SHEET

Longitudinal or transverse	Tensile or compressive	Yield strength (kips/in^2)	Ultimate strength (kips/in^2)	Young's modulus (kips/in^2)	Elongation (percent)
Longitudinal	T	52.8	70.8	10,640	18.5
Longitudinal	T	51.8	74.2	10,350	17.5
[1]Longitudinal	T	52.5	70.0	10,440	18.0
[1]Transverse	T	45.4	68.5	10,300	18.0
Transverse	T	43.9	----	10,450	18.0
Transverse	T	45.3	68.4	10,370	18.0
Transverse	T	45.0	67.6	10,280	19.0
Longitudinal	C	44.0	----	10,750	----
[1]Longitudinal	C	43.2	----	10,470	----

[1]Stress-strain curve given in figure 3.

TABLE 2.- RESULTS OF FATIGUE LOADING

AT TWO STRESS AMPLITUDES

	Low stress applied first			High stress applied first		
	$\frac{n_1}{N_1}$	$\frac{n_2}{N_2}$	$\frac{n_1}{N_1} + \frac{n_2}{N_2}$	$\frac{n_1}{N_1}$	$\frac{n_2}{N_2}$	$\frac{n_1}{N_1} + \frac{n_2}{N_2}$
	0.23	1.10	1.33	0.25	0.76	1.01
	.24	1.15	1.39	.25	.43	.68
	.24	1.21	1.45	.25	.34	.59
	.24	1.14	1.38	.26	.75	1.01
	.24	1.10	1.34	.25	.37	.62
	.24	.72	.96	.26	.30	.56
	.25	.84	1.09	.26	.40	.66
	.25	1.25	1.50	.26	.26	.52
	.25	1.21	1.46	.27	.28	.55
	.24	1.12	1.36	.27	.34	.61
	.24	.99	1.23	.27	.80	1.07
	.23	1.13	1.36	.28	.32	.60
	.24	.93	1.17	.26	.30	.56
	.23	1.00	1.23	.26	.40	.66
				.26	.72	.98
				.25	.34	.59
				.25	.35	.60
				.25	.34	.59
Av.	.24	1.06	1.30	.26	.43	.69
	.46	1.25	1.71	.51	.30	.81
	.48	1.16	1.64	.52	.49	1.01
	.49	1.31	1.80	.51	.39	.90
	.49	1.07	1.56	.53	.23	.76
	.47	.55	1.02	.53	.21	.74
	.48	.74	1.22	.54	.19	.73
	.49	.56	1.05	.53	.29	.82
	.49	1.07	1.56	.54	.37	.91
	.49	1.04	1.53	.54	.29	.83
	.50	.82	1.32	.54	.24	.78
	.49	.74	1.23	.53	.22	.75
	.48	1.03	1.51	.52	.15	.67
	.48	1.05	1.53	.52	.23	.75
	.46	.72	1.18	.51	.27	.78
	.47	1.17	1.64	.50	.24	.74
Av.	.48	.95	1.43	.52	.24	.76

TABLE 2 (Continued)

	Low stress applied first			High stress applied first		
	$\frac{n_1}{N_1}$	$\frac{n_2}{N_2}$	$\frac{n_1}{N_1} + \frac{n_2}{N_2}$	$\frac{n_1}{N_1}$	$\frac{n_2}{N_2}$	$\frac{n_1}{N_1} + \frac{n_2}{N_2}$
	0.73	1.10	1.83	.83	.10	.93
	.70	.91	1.61	.76	.22	.98
	.69	.02	.71	.78	.11	.89
	.71	1.14	1.85	.82	.19	1.01
	.74	.36	1.10	.79	.20	.99
	.70	.40	1.10	.89	.11	1.00
	.73	.79	1.52	.79	.19	.98
	.73	1.00	1.73	.81	.16	.97
	.74	1.27	2.01	.81	.21	1.02
	.75	.90	1.65	.82	.42	1.24
	.71	.56	1.27	.81	.08	.89
	.71	.46	1.17	.77	.10	.87
	.71	.18	.89	.80	.25	1.05
	.68	1.02	1.70	.75	.19	.94
	.67	.71	1.38	.73	.22	.95
	.67	.83	1.50			
Av.	.71	.73	1.44	.80	.18	.98

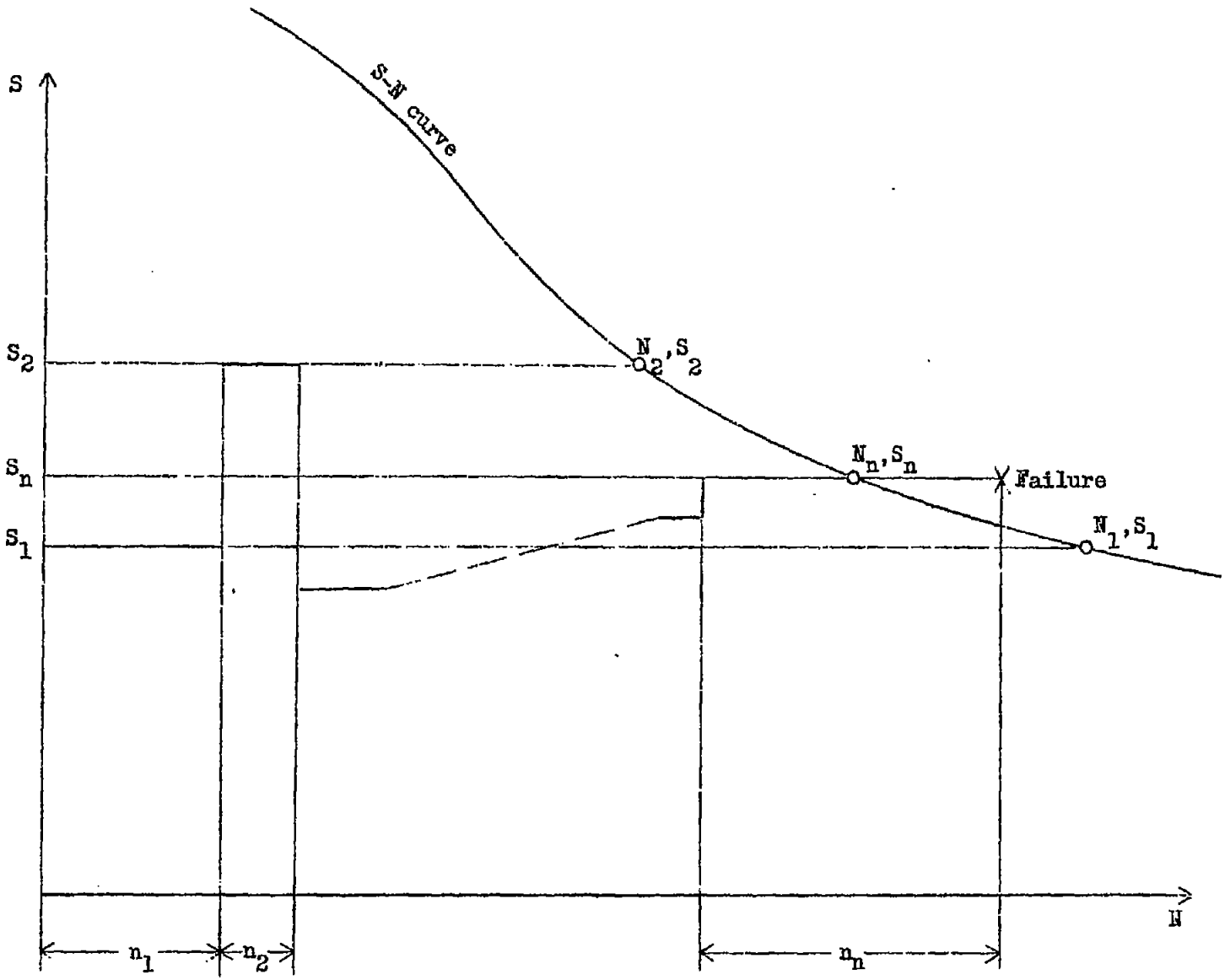

Figure 1.- Diagram illustrating fatigue loading at several stress amplitudes.

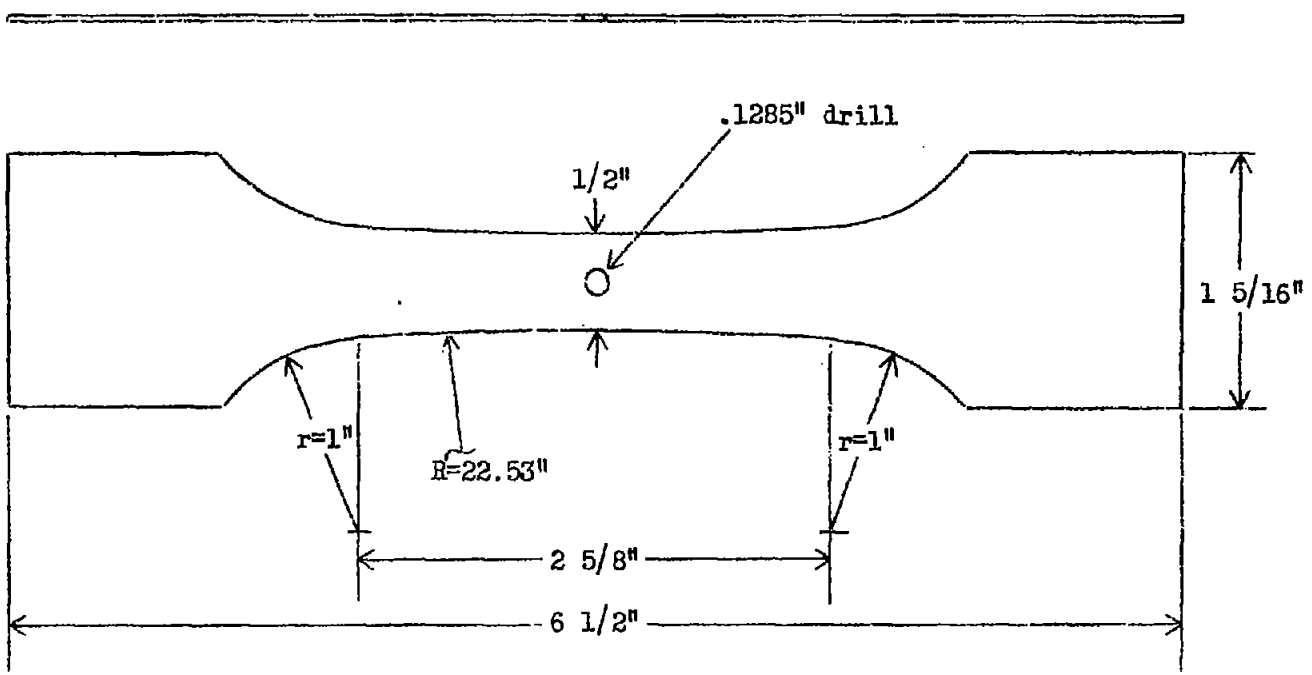

Figure 2.- Fatigue specimen.

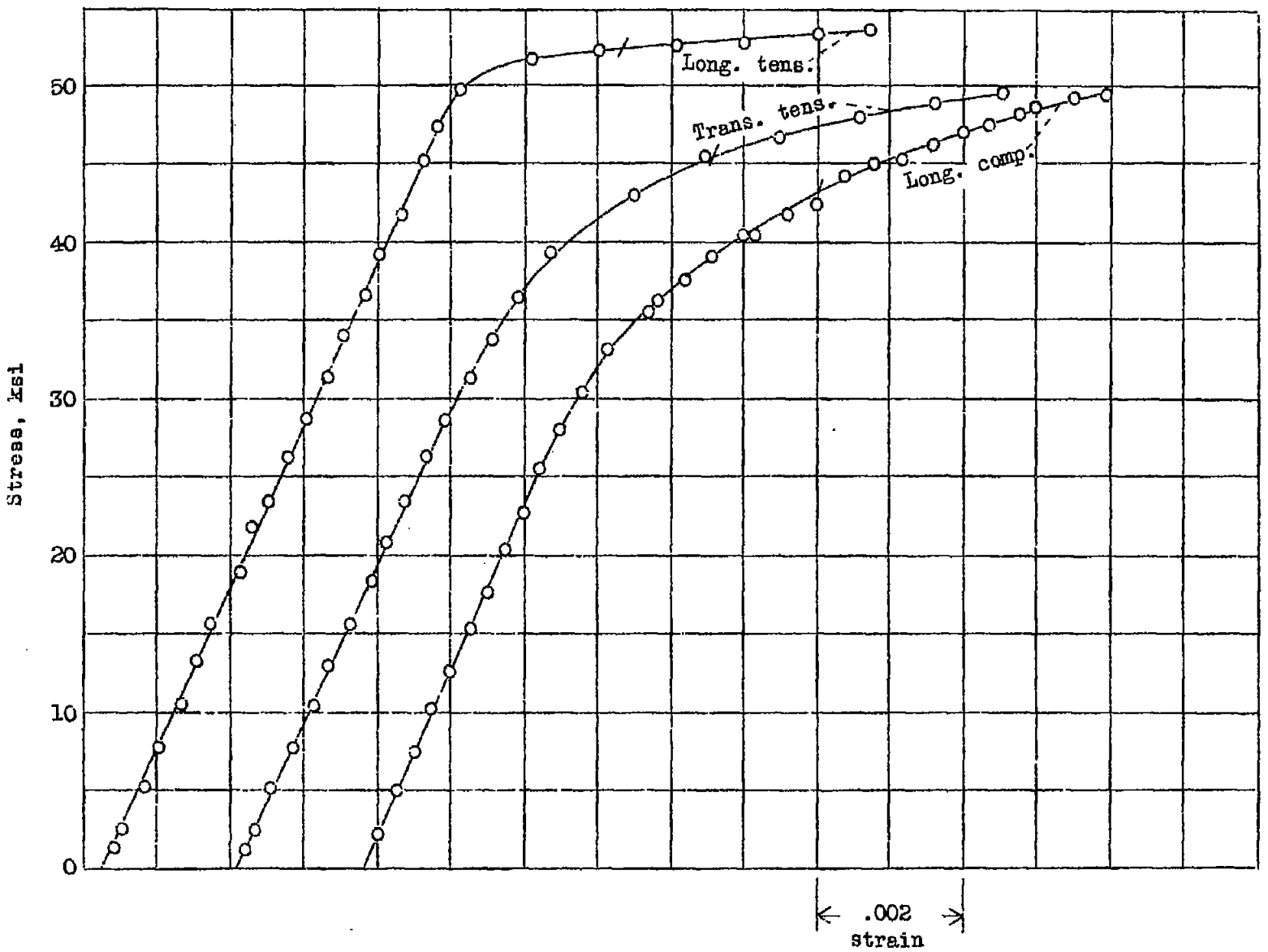

Figure 3.- Tensile and compressive stress-strain curves for .032-in. 24ST sheet.

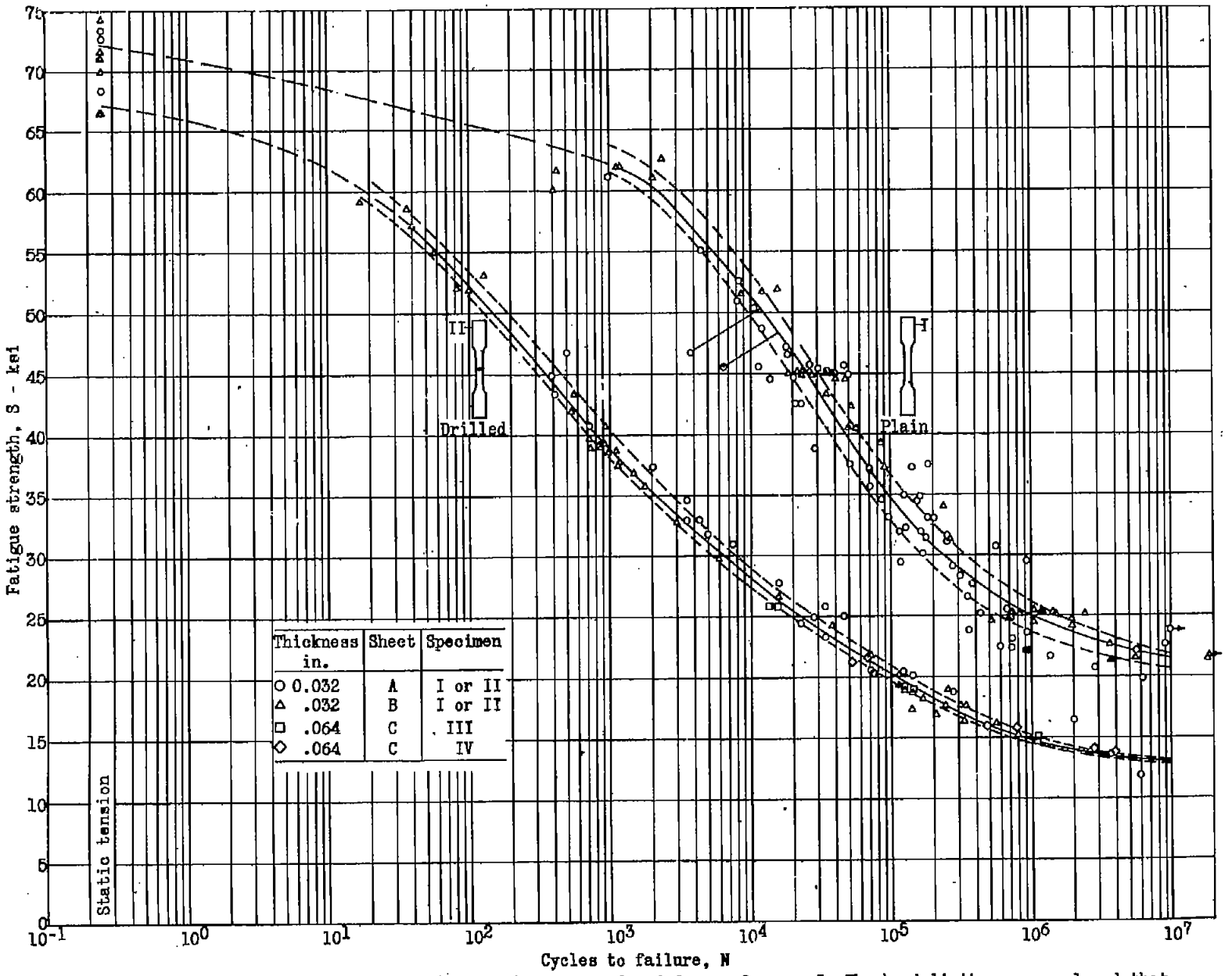

Figure 4.- S-N curves for plain and drilled specimens reproduced from reference 3. The band limits are so placed that approximately one fourth the points lie on each side of the band.

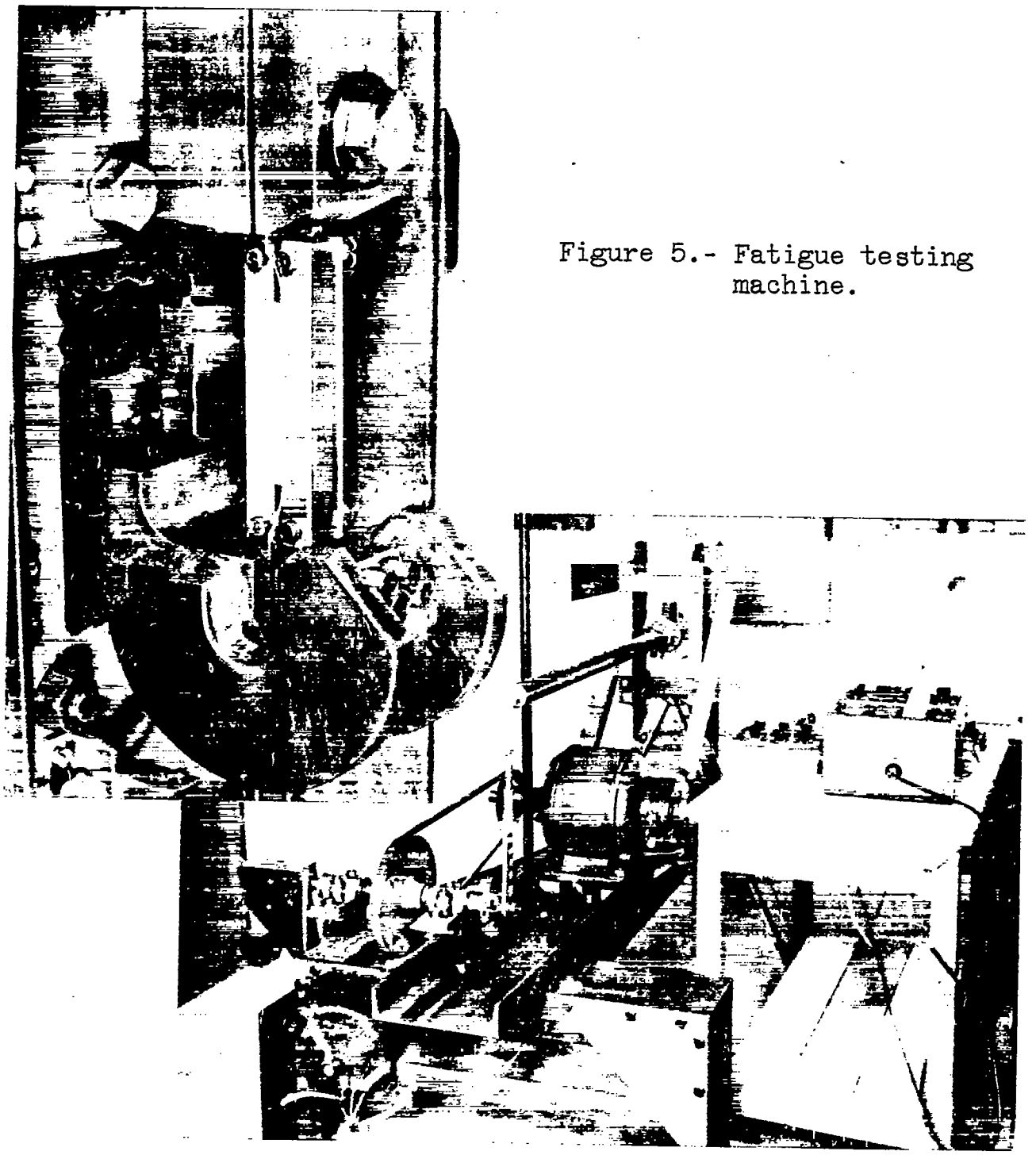

Figure 5.- Fatigue testing machine.

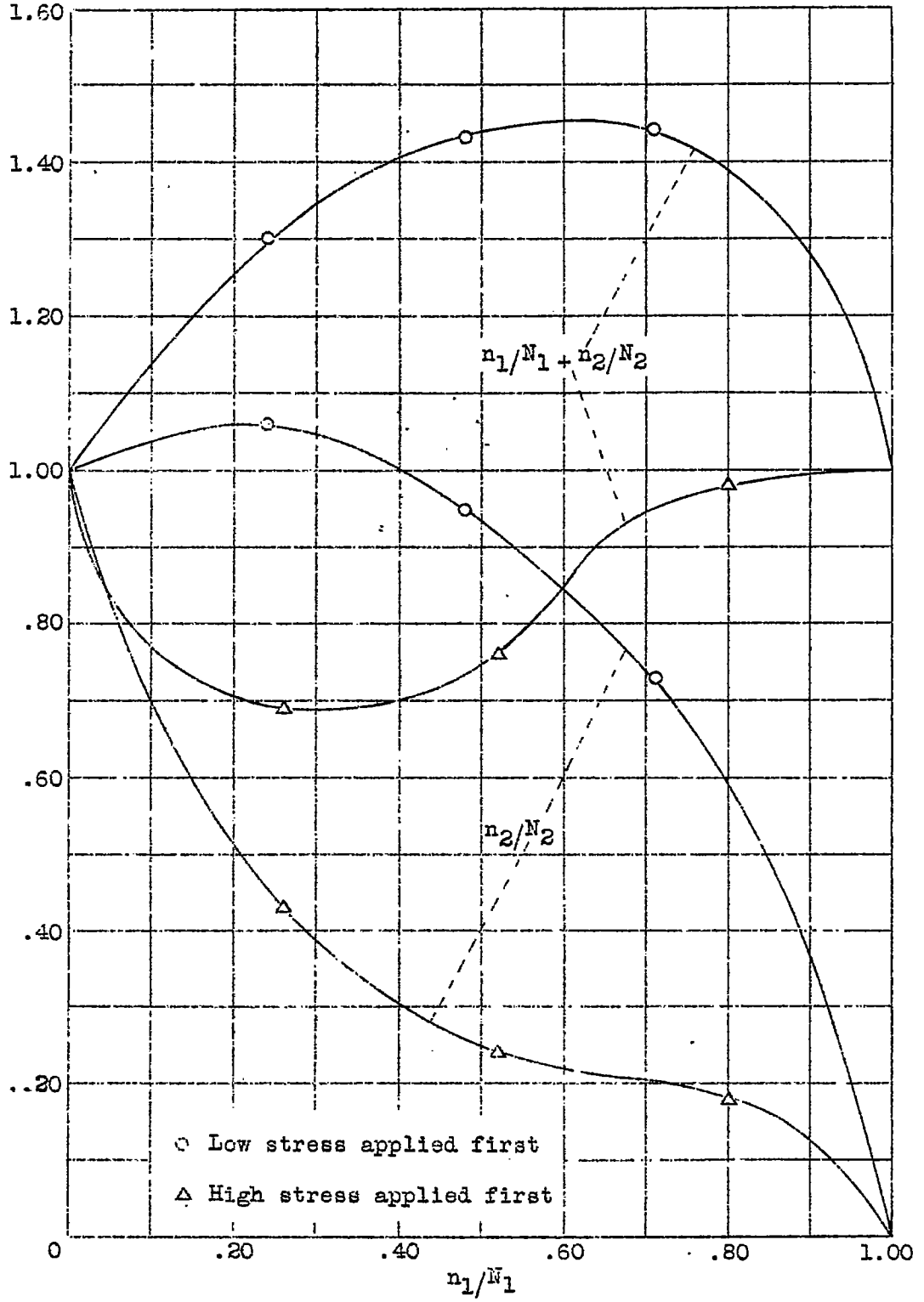

Figure 6.- Average results for fatigue loading at two stress amplitudes.