NOV 21 1945

RESTRICTED

CLASSIFICATION CANCELLED

NATIONAL ADVISORY COMMITTEE FOR AERONAUTICS

TECHNICAL NOTE

No. 993

ANALYTICAL STUDY OF TRANSMISSION OF LOAD FROM SKIN TO STIFFENERS AND RINGS OF PRESSURIZED CABIN STRUCTURE

By Theodore Hsueh-Huang Pian
Massachusetts Institute of Technology

NACA LIBRARY
LANGLEY MEMORIAL AERONAUTICAL
LABORATORY
Langley Field, Va.

Washington
October 1945

CLASSIFIED DOCUMENT

This document contains classified information affecting the National Defense of the United States within the meaning of the Espionage Act, USC 50:31 and 32. Its transmission or the revelation of its contents in any manner to an unauthorized person is prohibited by law. Information so classified may be imparted only to persons in the military and naval Services of the United States, appropriate civilian officers and employees of the Federal Government who have a legitimate interest therein, and to United States citizens of known loyalty and discretion who of necessity must be informed thereof.

RESTRICTED

NASA Technical Library
3 1176 01433 2937

NATIONAL ADVISORY COMMITTEE FOR AERONAUTICS

TECHNICAL NOTE NO. 993

ANALYTICAL STUDY OF TRANSMISSION OF LOAD FROM SKIN TO STIFFENERS AND RINGS OF PRESSURIZED CABIN STRUCTURE*

By Theodore Hsueh-Huang Pian

SUMMARY

The general problem of this paper is the deformation and the stress analysis of a pressurized cabin structure, consisting of sheet metal skin, longitudinal stringers, and a finite number of rings which are equally spaced between two end bulkheads. The minimum potential energy method is used. The deformations are calculated by solving the simultaneous difference equations, involving three deformation parameters - radial expansion of rings, quilting of stringers, and transverse elongation of skin. The tensile stresses of the rings and the stringers, and the longitudinal and the circumferential stresses of the skin are determined from the deformations. A few special cases from the general problem are also considered.

The results obtained during tests of pressurized cabin structures by both the Lockheed Aircraft Corporation and the Consolidated-Vultee Aircraft Corporation yield reasonable checks with the results from the theoretical analysis.

INTRODUCTION

The requirements of comfort during a high altitude bombing mission, and in the commercial passenger airplane, call for a new design trend of airplane structure, the pressurized cabin structure.

*Thesis submitted in partial fulfillment of the requirements for the degree of Master of Science from Massachusetts Institute of Technology, 1944.

A series of laboratory investigations (reference 1) were carried out at Wright Field during 1935 and 1936, on pressure cabins, the results of which formed the basis of the specifications of the first practical substratosphere airplane, the Air Corps Model (Lockheed) XC-35. The results show also that the simplest and lightest type of structure is a round cylindrical vessel with hemispherical heads, and that the present standard design of semimonocoque construction of fuselage is quite suitable. The first passenger airplane with pressurized cabin, the Boeing 307-B "Stratoliner" (reference 2), is of the same type of all-metal structure as the Lockheed, circular in section, with aluminum-alloy rings, partition bulkheads, longitudinal stiffeners, and smooth skin alclad covering. Following the same design trend, Boeing B-29 "Superfortress" also has a fuselage of circular section for holding pressure.

Tests of pressurized cabin structures were worked out in the Curtiss-Wright Corporation, St. Louis Airplane Division (reference 3), the Lockheed Aircraft Corporation (references 4 and 5), and the Consolidated-Vultee Aircraft Corporation (reference 6). The effects of the internal pressure on the stresses and the strain of the structure were specially investigated in the Lockheed and the Consolidated-Vultee Aircraft Corporations. The results of some particular test sections were represented by some plots. Some empirical formulas were developed. However, there were no analytical solutions for the general problem of the pressurized cabin structure.

The investigations in this paper were made to obtain more generalized mathematical analyses of monocoque structure subjected to internal pressure. It is also assumed that the principle of superposition can be applied, so that the stress analysis of a structure with combined internal pressure and external load can be made without excessive complication.

The author wishes to take this opportunity to express his appreciation to Prof. J. S. Newell for his valuable suggestions and helpful encouragement during the preparation of this thesis, and also to express his gratitude to the Lockheed Aircraft Corporation and the Consolidated-Vultee Aircraft Corporation for their interest in this work, and their kind cooperation in supplying the test data.

NOTATIONS

E	modulus of elasticity
μ	Poisson's ratio
p	cabin internal pressure
l	longitudinal spacing of rings
s	number of stringers along circumference of fuselage
r	radius of fuselage
A'	cross-sectional area of ring
I'	section moment of inertia of ring
A	cross-sectional area of stiffener
I	section moment of inertia of stiffener
t	thickness of skin
m	total number of spaces between two heavy rings
σ_x	longitudinal stress
σ_z	circumferential stress of skin
ϵ_x	longitudinal strain
ϵ_z	circumferential strain of skin
X, Y, Z	rectangular coordinates, longitudinal, tangential and radial, respectively
y	radial displacement of either stiffeners or skin
n	an integer between 0 and n
u_n	radial displacement of the nth ring
w_n	radial displacement of skin (or stiffeners) with respect to ring
v_n	longitudinal displacement between the nth spacing

M bending moment

α nondimensional parameter $(1/1 - \mu^2)$

β nondimensional parameter, ratio between ring and skin area (A'/tl)

ρ nondimensional parameter (t/l)

θ nondimensional parameter (r/l)

ϕ nondimensional parameter $(4\pi sI/l)$

ψ nondimensional parameter, ratio between stringer and skin area, $(sA/2\pi rt)$

υ nondimensional parameter (p/E)

$\overline{E}$ operator for solving differential equation

λ parameter in the solution of differential equation

K parameter defined by equation (55)

STATEMENT OF PROBLEM

The simplest type of pressurized cabin structure is a cylindrical shell with hemispherical heads, as shown in figure 1. This fuselage is divided longitudinally into many similar sections, each one of which consists primarily of:

1. Sheet-metal covering - the skin

2. Longitudinal stiffening members - the stringers

3. Transverse stiffening elements - the lighter forming rings, and the heavy partition bulkheads

The present problem is limited to the stress analysis of this kind of structure when subjected to internal pressure only. The analysis involves the determination of the deformations and stresses of the skin, the stringer, and the rings.

SIMPLE METHOD FOR CALCULATING THE AVERAGE STRESSES DUE TO PRESSURE

A method for calculating the average stringer, frame, and skin stresses was given in reference 4.

In the case of a monocoque fuselage the skin stresses are given by the two equations

$$\sigma_L = rp/2t \tag{1}$$

and

$$\sigma_c = rp/t \tag{2}$$

where

σ_L longitudinal stress, pounds per square inch

σ_c circumferential stress, pounds per square inch

r radius of fuselage, inches

p pressure difference between the inside and the outside of the fuselage, pounds per square inch

t skin thickness, inches

It might be assumed that if the longitudinal stringers and the circumferential rings were added to the monocoque shell they would take as much stress as the skin. This would mean that the average longitudinal and circumferential stresses would be given by

$$\sigma_{L(av)} = \frac{r^2p}{sA + 2\pi rt} \tag{3}$$

and

$$\sigma_{c(av)} = \frac{rpl}{A' + lt} \tag{4}$$

where

A cross-sectional area of stringer

s number of stringers around the circumference of fuselage

l frame spacing

A' frame area

By considering the fact that the skin has stresses in two directions, that is, by considering the effect of Poisson's ratio, there is actually found a difference between the stress of the stringer and the longitudinal stress of the skin, or between that of the frame and the circumferential stress of the skin. Two formulas were suggested in the article just mentioned (reference 4) for calculating the stresses of the stringer and of the frame.

$$\sigma_{stringer} = \sigma_{L(av)} - \mu \sigma_{c(av)} \tag{5}$$

$$\sigma_{frame} = \sigma_{c(av)} - \mu \sigma_{L(av)} \tag{6}$$

where

μ Poisson's ratio

A series of tests on pressurized cabin structure were run in Lockheed Aircraft Corporation. The results of the tests are represented as the plots in figures 2 and 3. The measured stringer stress is checked almost exactly by using equation (5), while the measured frame stress is lower than the calculated value by using equation (6). This shows that the skin deflects more circumferentially than does the frame.

The skin stresses can be calculated from equilibrium conditions, that is, by the equations

$$2\pi r t\, \sigma_x = sA \qquad \sigma_{stringer} = \pi r^2 p$$

$$t l\, \sigma_z = Al \qquad \sigma_{frame} = r l p$$

where

σ_x longitudinal skin stress

σ_z circumferential skin stress

The discussion which follows is based on the assumption that there is a certain amount of quilting between skin, stringer, and the frame. Some generalized formulas for calculating the deflections and stresses have been developed. These are all dependent on a large number of variables, such as, skin thickness, stringer area, stringer stiffness, stringer spacing, frame area, frame spacing, and diameter of fuselage.

MATHEMATICAL ANALYSIS OF PRESSURIZED CABIN STRUCTURE

Method of Approach

The analysis of the present problem is based on the strain-energy method, or in other words, the principle that the potential energy of a loaded elastic structure is minimum when equilibrium is reached. In applying this principle, the following procedure is followed.

The first step is to make a deformation assumption, that is, to write a formula giving the deflection of each part of the structure as a function of certain variables which are often called the deformation parameters.

The second step is to write the expression of the potential energy of the structure as a function of the deformation parameters.

The third step is to determine the change in potential energy due to a virtual displacement, that is, to differentiate the expression for potential energy of the structure with respect to each deformation parameter.

The fourth step is to determine the work done by the external load during each virtual displacement.

The fifth step is to write the equations of virtual work by equating the internal and the external work determined from the previous steps and to solve for the deformation parameters.

The last step is to determine the stresses of each part of the structure based on the deformation already assumed.

The type and number of deformation parameters are flexible depending upon the choice of the analyst. The solution becomes more accurate as the number and suitability of the parameters increase. However, the amount of computation increases rapidly as more parameters are added, and therefore it is desirable to place reliance on suitability rather than number. Thus the method pays a premium for good judgment.

Assumptions

The present analysis applies to a monocoque structure having the following characteristics:

1. Circular cross section without taper

2. Very thin skin taking no bending loads

3. Uniformly distributed stringers spaced closely enough that the quilting of the skin panels between them is very small and can be neglected

4. Equally spaced light rings between bulkheads, the bulkheads being considered as rings of infinite rigidity

5. Radius of fuselage very large in comparison with the size of the ring

6. Same material for skin, stringers, and rings

Deformation Assumption - Three Deformation Parameters

1. Expansion of ring.- Consider a certain section of a pressurized cabin structure between two main frames or bulkheads. Between these two end rigid rings there are $(m-1)$ equally spaced light rings, each of which is attached to the skin and is supposed to expand radially with the skin due to the air pressure. The radial expansion of the ring, Δr, is considered to be the first deformation parameter, and is represented by u_n. The subscript n indicates the order of ring from the end.

2. Longitudinal expansion of stringers or skin between two rings.- The increase of the distance, Δl, between two rings due to pressure is considered to be the second deformation parameter, and is represented by v_n. The subscript n indicates the order of the span, the nth span being that between the $(n-1)$th and the nth ring.

3. Quilting of stringer or skin between the rings.- The simplest function for representing the deflection of the stringer is a trigonometric function, that is, the sine function, the cosine function, or a combination of these functions. In the practical construction, the stringers are usually continuous through several spans, and are fixed to the rings rigidly either by riveting or welding. It is, thus, a proper assumption that the rings remain untwisted when the pressure is applied, and that the slope of the

deflection curve of the stringer with respect to the reference line is zero at the junction point to the ring.

The deflection curve of the stringer can be represented by the following trigonometric function, which satisfies the above-mentioned end conditions, as its first derivative becomes zero at the ends of the span.

$$y_n = u_{n-1} + \frac{u_n - u_{n-1}}{2}\left(1 - \cos\frac{\pi x}{l}\right) + w_n\left(1 - \cos\frac{2\pi x}{l}\right) \tag{7}$$

Here w_n is the third deformation parameter, indicating the average quilting of the stringer between the rings.

The definitions of the deformation parameter can be illustrated more clearly by figure 4.

Strain Energy of Bending of Stringers

The general expression for the strain energy of bending is given by the equation (reference 7)

$$V = \frac{EI}{2}\int_0^l \left(\frac{d^2y}{dx^2}\right)^2 dx \tag{8}$$

where EI is the flexural rigidity of the stringer. The second derivative of y with respect to x from equation (7) is

$$\frac{d^2y}{dx^2} = \frac{u_n - u_{n-1}}{2}\frac{\pi^2}{l^2}\cos\frac{\pi x}{l} + w_n\frac{4\pi^2}{l^2}\cos\frac{2\pi x}{l}$$

Substituting in equation (8) gives

$$V = \frac{EI}{2}\frac{\pi^4}{l^4}\int_0^l \frac{1}{4}(u_n - u_{n-1})^2\cos^2\frac{\pi x}{l}$$

$$+ 2w_n(u_n - u_{n-1})\cos\frac{\pi x}{l}\cos\frac{2\pi x}{l} + 16w_n^2\cos^2\frac{2\pi x}{l}\,dx$$

It can be shown that

$$\int_0^l \cos^2 \frac{n\pi x}{l}\, dx = \frac{l}{2}$$

and

$$\int_0^l \cos \frac{n\pi x}{l} \cos \frac{m\pi x}{l}\, dx = 0$$

Hence, the expression for strain energy becomes

$$V = \frac{EI}{2} \frac{\pi^4}{l^3} \left[\frac{1}{8} (u_n - u_{n-1})^2 + 8\, w_n^2\right]$$

or

$$V = \frac{4\pi^4 EI}{l^3} \left[\frac{1}{64} (u_n - u_{n-1})^2 + w_n^2\right] \tag{9}$$

This equation applies to only one stringer at a particular section. The total energy of bending of stringers between the two rigid rings is expressed as

$$V = \frac{4\pi^4 sEI}{l^3} \left[\frac{1}{64} \sum_0^m (u_n - u_{n-1})^2 + \sum_1^m w_n^2\right] \tag{10}$$

where

s number of stringers around circumference

m number of spans between two rigid rings

Strain Energy of Elongation of Stringers

The general expression for the strain energy of elongation is given by the equation (reference 7)

$$V = \frac{AE}{2l} \delta^2 \tag{11}$$

where

A cross-sectional area of the bar

δ increase in length within a certain section of length l

The elongation of the stringer between two rings is equal to the difference between the length of the deflection curve and the original length of the chord multiplied by a factor representing the increase in distance between two rings. As shown in figure 4 the elongation is

$$\delta = \left[l + \int_0^l (ds - dx)\right]\left(1 + \frac{v_n}{l}\right) - l \tag{12}$$

The difference between the length of an element ds of the curve and the corresponding element dx of the chord is equal to

$$ds - dx = dx\sqrt{1 + \left(\frac{dy}{dx}\right)^2} - dx \approx \frac{1}{2}\left(\frac{dy}{dx}\right)^2 dx$$

Substituting in equation (12) gives

$$= \frac{1}{2}\int_0^l \left(\frac{dy}{dx}\right)^2 dx + \frac{v_n}{2l}\int_0^l \left(\frac{dy}{dx}\right)^2 dx + v_n$$

From equation (7)

$$\frac{dy}{dx} = \frac{u_n - u_{n-1}}{2}\frac{\pi}{l}\sin\frac{\pi x}{l} + \frac{w_n 2\pi}{l}\sin\frac{2\pi x}{l}$$

and

$$\left(\frac{dy}{dx}\right)^2 = \left(\frac{u_n - u_{n-1}}{2}\right)^2 \frac{\pi^2}{l^2}\sin^2\left(\frac{\pi x}{l}\right) + \frac{4w_n{}^2\pi^2}{l^2}\sin^2\left(\frac{2\pi x}{l}\right)$$

$$+ \frac{2\pi^2}{l^2}(u_n - u_{n-1})\, w_n \sin\frac{\pi x}{l}\sin\frac{2\pi x}{l}$$

It can be shown that

$$\int_0^l \sin \frac{n\pi x}{l}\, dx = \frac{l}{2}$$

and

$$\int_0^l \sin \frac{n\pi x}{l} \sin \frac{m\pi x}{l}\, dx = 0$$

Hence,

$$\int_0^l \left(\frac{dy}{dx}\right)^2 dx = \frac{\pi^2}{2l}\left(\frac{u_n - u_{n-1}}{2}\right)^2 + \frac{2\pi^2}{l} w_n^2$$

and

$$\delta = \left[\frac{\pi^2}{4l}\left(\frac{u_n - u_{n-1}}{2}\right)^2 + \frac{\pi^2}{l} w_n^2\right]\left[1 + \frac{v_n}{l}\right] + v_n$$

By comparing the magnitude of the two terms of the preceding equation it is obvious that $\frac{w_n^2}{l}$ or $\left(\frac{u_n - u_{n-1}}{l}\right)^2$ is of very small order of v_n, and it is sufficiently accurate to assume

$$\delta = v_n \tag{13}$$

Thus the expression for strain energy becomes

$$V = \frac{AE}{2l} v_n^2 \tag{14}$$

The total energy of elongation of stringers between the two rigid rings is expressed as

$$V = \frac{sAE}{2l} \sum_{1}^{m} v_n^2 \tag{15}$$

Strain Energy of Expansion of Skin

The general expression for the strain energy for a three-dimensional stress distribution is given by the equation (reference 8)

$$V = \iiint \frac{1}{2} (\sigma_x \epsilon_x + \sigma_y \epsilon_y + \sigma_z \epsilon_z + \tau_{xy}\gamma_{xy} + \tau_{xz}\gamma_{xz} + \tau_{yz}\gamma_{yz})\, dxdydz \tag{16}$$

where σ, ϵ, τ, and γ are the normal and shearing stress and normal and shearing strain.

In the present case, the problem of expansion of skin can be reduced to a two-dimensional one, by assuming that the x- and z-directions coincide, respectively, with the transverse and tangential directions along the skin, and that the thickness t of skin is so small that the variation of it can be neglected. Having the assumption that the skin is expanding uniformly and symmetrically along the circumference, it can be concluded also that the membrane shearing stresses τ_{xz} vanish. The expression for the strain energy is thus reduced to the following simplified form

$$V = \frac{t}{2} \int_0^l \int_0^{2\pi r} (\sigma_x \epsilon_x + \sigma_z \epsilon_z)\, dxdz \tag{17}$$

where r is the radius of the fuselage.

In the case of plane stress distribution the relation between stress and strain is given by the equations (reference 8):

$$\epsilon_x = \frac{1}{E}(\sigma_x - \mu\,\sigma_z)$$

$$\epsilon_z = \frac{1}{E}(\sigma_z - \mu\,\sigma_x) \tag{18}$$

where μ is Poisson's ratio. Solving for σ_x and σ_z gives

$$\sigma_x = \frac{\epsilon_x + \mu\,\epsilon_z}{1 - \mu^2}\,E$$

$$\sigma_z = \frac{\epsilon_z + \mu\,\epsilon_x}{1 - \mu^2}\,E \tag{19}$$

Substituting in equation (17) gives

$$V = \frac{tE}{2\,(1 - \mu^2)}\int_0^l\int_0^{2\pi r}(\epsilon_x{}^2 + 2\mu\,\epsilon_x\epsilon_y + \epsilon_z{}^2)\,dx\,dz \tag{20}$$

The strain ϵ_x can be assumed constant throughout the span through the same argument as in the previous section. Thus

$$\epsilon_x = \frac{v_n}{l} \tag{21}$$

The strain ϵ_z can be expressed in terms of the other two deformation parameters.

$$\epsilon_z = \frac{y}{r}$$

$$= \frac{1}{r}\left[u_{n-1} + \frac{u_n - u_{n-1}}{2}\left(1 - \cos\frac{\pi x}{l}\right) + w_n\left(1 - \cos\frac{2\pi x}{l}\right)\right] \tag{22}$$

Substituting equations (21) and (22) in (20), and integrating by noticing the fact that

$$\int_0^l \cos \frac{n\pi x}{l}\, dx = 0$$

$$\int_0^l \cos \frac{n\pi x}{l} \cos \frac{m\pi x}{l}\, dx = 0$$

and

$$\int_0^l \cos^2 \frac{n\pi x}{l}\, dx = \frac{l}{2}$$

leads to

$$V = \frac{\pi E t}{1-\mu^2}\left[\frac{r}{l} v_n^2 + 2\mu\, v_n \left(\frac{u_{n-1} + u_n}{2} + w_n\right) + \frac{l}{r}\left(\frac{1}{8} u_{n-1}^2 + \frac{1}{4} u_{n-1} u_n + \frac{1}{8} u_n^2 + \frac{3}{2} w_n^2 + u_n w_n + u_{n-1} w_n\right)\right] \tag{23}$$

The total energy of expansion of skin between the two rigid rings is expressed as

$$V = \frac{\pi E t}{1-\mu^2}\left[\frac{r}{l} \sum_1^m v_n^2 + 2\mu \sum_1^m v_n \left(\frac{u_{n-1} + u_n}{2} + w_n\right) + \frac{l}{r} \sum_1^m \left(\frac{3}{8} u_{n-1}^2 + \frac{1}{4} u_{n-1} u_n + \frac{3}{8} u_n^2 + \frac{3}{2} w_n^2 + u_n w_n + u_{n-1} w_n\right)\right] \tag{24}$$

Strain Energy of Expansion of Rings

From the general expression for the strain energy of elongation (equation (11)) it can be shown that for the expansion of ring

$$V = \frac{A'E}{2 \times 2\pi r}(2\pi\ (r + u_n) - 2\pi r)^2$$

where A' is the cross-sectional area of the ring or

$$V = \frac{\pi A'E}{r} u_n^2 \tag{25}$$

The total energy of expansion of rings between two rigid rings is expressed as

$$V = \frac{\pi A'E}{r} \sum_{0}^{m} u_n^2 \tag{26}$$

Strain Energy of Bending of Ring

The general expression for the strain energy of bending is given in terms of the bending moment by the equation (reference 7)

$$V = \int \frac{M^2 dz}{2EI} \tag{27}$$

The bending moment for beams having circular central axes is expressed by the equation (reference 9)

$$\frac{M}{EI} = -\frac{1}{r^2}\left(y + \frac{d^2y}{d\phi_1^2}\right) \tag{28}$$

where

r radius of curvature

y radial expansion of ring

ϕ_1 angle representing position of section

For a uniformly expanded ring, the deflection y is constant all around the circumference; that is, its second derivative with respect to ϕ_1 vanishes. Thus

$$M = -\frac{EI}{r^2} y$$

$$V = \frac{EIy}{2r^4} \int_0^{2\pi r} dz$$

$$= \frac{\pi EI}{r^3} y \tag{29}$$

In practical cases, the depth of the ring is usually very small, while the radius r of the fuselage is very large. It can be shown in the actual example under the section Analytical Solutions Applied to Actual Test Sections that the value of $\frac{I}{r^3}$ is very small in comparison with the value of A/r. It is thus allowable to neglect the strain energy of bending of ring in the present discussion.

Expression for Total Strain Energy

The total strain energy between the two rigid frames is expressed in terms of the deformation parameters as follows:

$$V = \frac{4\pi^4 sEI}{l^3}\left[\frac{1}{64}\sum_0^m (u_n - u_{n-1})^2 + \sum_1^m w_n^2\right] + \frac{sAE}{2l}\sum_1^m v_n^2$$

$$+ \frac{\pi Et}{1-\mu^2}\left[\frac{r}{l}\sum_1^m v_n^2 + 2\mu\sum_1^m v_n\left(\frac{u_{n-1}+u_n}{2} + w_n\right)\right.$$

$$\left. + \frac{l}{r}\sum_1^m\left(\frac{3}{8}u_{n-1}^2 + \frac{1}{4}u_{n-1}u_n + \frac{3}{8}u_n^2 + \frac{3}{2}w_n^2 + u_n w_n + u_{n-1} w_n\right)\right]$$

$$+ \frac{\pi A' E}{r}\sum_0^m u_n^2 \tag{30}$$

Introduction of Nondimensional Parameters

In order to simplify the form of the general equation, the following nondimensional parameters are introduced:

$$\alpha = \frac{1}{1-\mu^2} \tag{31}$$

$$\beta = \frac{A'}{tl} \tag{32}$$

$$\rho = \frac{t}{r} \tag{33}$$

$$\theta = \frac{r}{l} \tag{34}$$

$$\phi = \frac{4\pi^3 sI}{l^4} \tag{35}$$

$$\psi = \frac{sA}{2\pi rt} \tag{36}$$

Substituting in equation (30) gives

$$\begin{aligned} V = \pi r E \Bigg[& \frac{\phi}{\theta} \left\{ \frac{1}{64} \sum_{0}^{m} (u_n - u_{n-1})^2 + \sum_{1}^{m} w_n^2 \right\} + \rho\theta\psi \sum_{1}^{m} v_n^2 \\ & + \rho\alpha \left\{ \theta \sum_{1}^{m} v_n^2 + 2\mu \sum_{1}^{m} v_n \left(\frac{u_{n-1} + u_n}{2} + w_n \right) \right. \\ & + \frac{1}{\theta} \sum_{1}^{m} \left(\frac{3}{8} u_{n-1}^2 + \frac{1}{4} u_{n-1} u_n + \frac{3}{8} u_n^2 + \frac{3}{2} w_n^2 \right. \\ & \left. \left. + u_n w_n + u_{n-1} w_n \right) \right\} + \frac{\rho\beta}{\theta} \sum_{0}^{m} u_n^2 \Bigg] \end{aligned} \tag{37}$$

Change in Strain Energy Due to Small Deformation

The effects of the small changes of the deformation on

the change in the strain energy are determined by differentiating equation (37) separately with respect to the deformation parameters. Since the derivatives of $\sum (u_n - u_{n-1})^2$?? with respect to u_n vanish, it follows that

$$\frac{\partial V}{\partial u_n} du_n = 2\pi r E \left[\rho\alpha \left\{\frac{\mu}{2}(v_n + v_{n+1}) + \frac{1}{2\theta}\left(\frac{1}{4} u_{n-1} + \frac{3}{2} u_n + \frac{1}{4} u_{n+1}\right)\right.\right.$$

$$\left.\left. + \frac{1}{2\theta}(w_n + w_{n+1})\right\} + \frac{\rho\beta}{\theta} u_n\right] du_n \tag{38}$$

$$\frac{\partial V}{\partial v_n} dv_n = 2\pi r E\left[\rho\,\theta\psi v_n + \rho\alpha\left\{\theta v_n + \mu\left(\frac{u_{n-1}+u_n}{2} + w_n\right)\right\}\right] dv_n \tag{39}$$

$$\frac{\partial V}{\partial w_n} dw_n = 2\pi r E\left[\frac{\Phi}{\theta} w_n + \rho\alpha\left\{\mu v_n + \frac{1}{\theta}\left(\frac{u_n+u_{n-1}}{2} + \frac{3}{2} w_n\right)\right\}\right] dw_n \tag{40}$$

Work Done by External Load

The work done due to the internal pressure applied to the end of the cylindrical structure may be expressed approximately by

$$U = \pi r^2 p \sum_1^m v_n \tag{41}$$

where p is the pressure difference between the inside and the outside of the cabin.

The work done due to the internal pressure applied radially is expressed as

$$U = 2\pi r\ p \sum_{1}^{m} \int_{0}^{l} y_n\, dx$$

$$= 2\pi r\ p \sum_{1}^{m} \int_{0}^{l} \left[u_{n-1} + \frac{u_n - u_{n-1}}{2} \left(1 - \cos \frac{\pi x}{l}\right) + w_n \left(1 - \cos \frac{2\pi x}{l}\right) \right] dx$$

$$= 2\pi r\ p\ l \left[\sum_{1}^{m-1} u_n + \frac{u_o + u_m}{2} + \sum_{1}^{m} w_n \right] \tag{42}$$

The work done by the external load during the additional variation may be expressed similarly by differentiation.

$$\frac{\partial U}{\partial u_n}\, d\ u_n = 2\pi r\ p\ l\ d\ u_n \tag{43}$$

(Except for u_o and u_m, which are taken to be zero in this case)

$$\frac{\partial U}{\partial v_n}\, d\ v_n = \pi r^2\ p\ d\ v_n \tag{44}$$

$$\frac{\partial U}{\partial w_n}\, d\ w_n = 2\pi r\ p\ l\ d\ w_n \tag{45}$$

General Equations for Determining the Deformation Parameters

Equating the change in strain energy to the work done by the external load during each additional variation results in

$$\frac{\partial V}{\partial u_n} d\, u_n = \frac{\partial U}{\partial u_n} d\, u_n$$

$$\frac{\partial V}{\partial v_n} d\, v_n = \frac{\partial U}{\partial v_n} d\, v_n$$

$$\frac{\partial V}{\partial w_n} d\, w_n = \frac{\partial U}{\partial w_n} d\, w_n$$

$$\rho\alpha \left\{\frac{\mu}{2}(v_n + v_{n+1}) + \frac{1}{2\theta}\left(\frac{1}{4} u_{n-1} + \frac{3}{2} u_n + \frac{1}{4} u_{n+1}\right) + \frac{1}{2\theta}(w_n + w_{n+1})\right.$$

$$+ \frac{\rho\beta}{\theta} u_n = p \frac{l}{E}$$

$$\rho\, \theta\, \psi\, v_n + \rho\alpha\left\{\theta\, v_n + \mu\left(\frac{u_{n-1} + u_n}{2} + w_n\right)\right\} = \frac{1}{2} p \frac{r}{E} \tag{46}$$

$$\frac{\phi}{\theta} w_n + \rho\alpha\left\{\mu\, v_n + \frac{1}{\theta}\left(\frac{u_n + u_{n-1}}{2} + \frac{3}{2} w_n\right)\right\} = p \frac{l}{E}$$

By defining another nondimensional parameter υ for p/E, and by rearranging the terms, it is found that

$$\frac{1}{8} u_{n-1} + \left(\frac{\beta}{\alpha} + \frac{3}{4}\right) u_n + \frac{1}{8} u_{n+1} + \frac{\theta\mu}{2}(v_n + v_{n+1}) + \frac{1}{2}(w_n + w_{n+1}) = \frac{\upsilon r}{\rho\alpha} \tag{47}$$

$$\mu\,(n_{n-1} + u_n) + 2\theta\left(\frac{\psi}{\alpha} + 1\right) v_n + 2\mu\, w_n = \frac{\upsilon r}{\rho\alpha} \tag{48}$$

$$\frac{1}{2}(u_{n-1} + u_n) + \theta\,\mu\, v_n + \left(\frac{\phi}{\rho\alpha} + \frac{3}{2}\right) w_n = \frac{\upsilon r}{\rho\alpha} \tag{49}$$

From equations (48) and (49), v_n and w_n can be solved in terms of u_{n-1} and u_n. Hence

$$v_n = \frac{\left(\frac{\phi}{\rho\alpha} + \frac{3}{2} - 2\mu\right)\frac{vr}{\rho\alpha} - \mu\left(\frac{\phi}{\rho\alpha} + \frac{1}{2}\right)(u_{n-1} + u_n)}{2\left[\left(1 + \frac{\psi}{\alpha}\right)\left(\frac{\phi}{\rho\alpha} + \frac{3}{2}\right) - \mu^2\right]} \tag{50}$$

and

$$w_n = \frac{2\left[\left(1 + \frac{\psi}{\alpha}\right) - \mu\right]\frac{vr}{\rho\alpha} + \left[\mu^2 - \left(1 + \frac{\psi}{\alpha}\right)\right](u_{n-1} + u_n)}{2\left[\left(1 + \frac{\psi}{\alpha}\right)\left(\frac{\phi}{\rho\alpha} + \frac{3}{2}\right) - \mu^2\right]} \tag{51}$$

For solving u_n, the simultaneous difference equations are written in the following form (reference 10)

$$\left[\frac{1}{8} + \left(\frac{\beta}{\alpha} + \frac{3}{4}\right)\overline{E} + \frac{1}{8}\overline{E}^2\right]u_n + \frac{\theta\mu}{2}\left(\overline{E} + \overline{E}^2\right)v_n + \frac{\overline{E} + \overline{E}^2}{2}w_n = \frac{vr}{\rho\alpha}$$

$$\mu\left(1 + \overline{E}\right)u_n + 2\theta\left(\frac{\psi}{\alpha} + 1\right)\overline{E}\,v_n + 2\mu\,\overline{E}\,w_n = \frac{vr}{\rho\alpha}$$

$$\frac{1 + \overline{E}}{2}u_n + \theta\,\mu\,\overline{E}\,v_n + \left(\frac{\phi}{\rho\alpha} + \frac{3}{2}\right)\overline{E}\,w_n = \frac{vr}{\rho\alpha} \tag{52}$$

where $\overline{E}$ is an operator defined by the relation

$$\overline{E}^n f(x) = f(x + n)$$

The solution of these equations is

$$u_n = A_1\lambda_1^n + A_2\lambda_2^n + \overline{u} \tag{53}$$

where A_1 and A_2 are the arbitrary constants determined from the boundary conditions, λ_1 and λ_2 are roots of the equation

$$\begin{vmatrix} \frac{1}{8} + \left(\frac{\beta}{\alpha} + \frac{3}{4}\right)\lambda + \frac{1}{8}\lambda^2 & \frac{\theta\mu}{2}(\lambda + \lambda^2) & \frac{\lambda + \lambda^2}{2} \\ \mu(1 + \lambda) & 2\theta\left(\frac{\psi}{\alpha} + 1\right)\lambda & 2\mu\lambda \\ \frac{1 + \lambda}{2} & \theta\mu\lambda & \left(\frac{\phi}{\rho\alpha} + \frac{3}{2}\right)\lambda \end{vmatrix} = 0 \qquad (54)$$

and $\bar{u}$ is the particular solution of the difference equation determined by substituting $\bar{E} = 1$ in the preceding simultaneous equation (equation (52)).

Equation (54) can be reduced to the following simplified form

$$\lambda^2 + K\lambda + 1 = 0 \qquad (55)$$

where

$$K = \frac{\left(\frac{\phi}{\rho\alpha} + \frac{3}{2}\right)\left[2\left(1 + \frac{\psi}{\alpha}\right)\left(\frac{\beta}{\alpha} + \frac{3}{4}\right) - \mu^2\right] - \left(1 + \frac{\psi}{\alpha}\right) - 2\mu^2\left(\frac{\beta}{\alpha} - \frac{1}{4}\right)}{\frac{1}{2}\left(\frac{\phi}{\rho\alpha} - \frac{1}{2}\right)\left[\frac{1}{2}\left(1 + \frac{\psi}{\alpha}\right) - \mu^2\right] - \frac{1}{4}\mu^2}$$

In general K, the coefficient of the λ-term, is positive and usually lies between 20 and 50. The solution of this quadratic equation will be approximately

$$\lambda_1 \doteq -K = -\frac{\left(\frac{\phi}{\rho\alpha} + \frac{3}{2}\right)\left[2\left(1 + \frac{\psi}{\alpha}\right)\left(\frac{\beta}{\alpha} + \frac{3}{4}\right) - \mu^2\right] - \left(1 + \frac{\psi}{\alpha}\right) - 2\mu^2\left(\frac{\beta}{\alpha} + \frac{1}{4}\right)}{\frac{1}{2}\left(\frac{\phi}{\rho\alpha} - \frac{1}{2}\right)\left[\frac{1}{2}\left(1 + \frac{\psi}{\alpha}\right) - \mu^2\right] - \frac{1}{4}\mu^2} \qquad (56)$$

and

$$\lambda_2 = \frac{1}{\lambda_1} \doteq -\frac{\frac{1}{2}\left(\frac{\phi}{\rho\alpha} - \frac{1}{2}\right)\left[\frac{1}{2}\left(1 + \frac{\psi}{\alpha}\right) - \mu^2\right] - \frac{1}{4}\mu^2}{\left(\frac{\phi}{\rho\alpha} + \frac{3}{2}\right)\left[2\left(1 + \frac{\psi}{\alpha}\right)\left(\frac{\beta}{\alpha} + \frac{3}{4}\right) - \mu^2\right] - \left(1 + \frac{\psi}{\alpha}\right) - 2\mu^2\left(\frac{\beta}{\alpha} + \frac{1}{4}\right)} \qquad (57)$$

The particular solution of u_n is determined by solving the following simultaneous equations

$$\left(\frac{\beta}{\alpha} + 1\right) \bar{u} + \theta \mu \bar{v} + \bar{w} = \frac{\upsilon r}{\rho\alpha}$$

$$2\mu \bar{u} + 2\theta \left(\frac{\psi}{\alpha} + 1\right) \bar{v} + 2\mu \bar{w} = \frac{\upsilon r}{\rho\alpha} \qquad (58)$$

$$\mu \bar{u} + \theta \mu \bar{v} + \left(\frac{\phi}{\rho\alpha} + \frac{3}{2}\right) \bar{w} = \frac{\upsilon r}{\rho\alpha}$$

hence

$$\bar{u} = \frac{\frac{\upsilon r}{\rho\alpha}\left[\left(1 + \frac{\psi}{\alpha}\right) - \frac{1}{2}\mu\right]\left[\frac{1}{2} + \frac{\phi}{\rho\alpha}\right]}{\mu^2\left(1 - \frac{\beta}{\alpha}\right) + \left(\frac{3}{2} + \frac{\phi}{\rho\alpha}\right)\left[\left(1 + \frac{\beta}{\alpha}\right)\left(1 + \frac{\psi}{\alpha}\right) - \mu^2\right] - \left(1 + \frac{\psi}{\alpha}\right)} \qquad (59)$$

The boundary conditions in the present case are that for $u_n = 0$ and $n = m$. The radial deflections of the ring are zero. Thus from equation (53) for $u_o = 0$,

$$A_1 + A_2 + \bar{u} = 0$$

or

$$A_1 + A_2 = -\bar{u} \qquad (a)$$

for $u_m = 0$

$$A_1 \lambda_1^m + A_2 \lambda_2^m + \bar{u} = 0$$

or

$$A_1 \lambda_2^{-m} + A_2 \lambda_2^m = -\bar{u} \qquad (b)$$

Solving for A_1 and A_2 from equations (a) and (b) gives

$$A_1 = -\frac{\lambda_2^m \bar{u}}{1 + \lambda_2^m}$$

$$A_2 = -\frac{\bar{u}}{1 + \lambda_2^m}$$

Substituting in equation (53) gives

$$u_n = -\frac{\lambda_2^{\,m}\,\bar{u}}{1+\lambda_2^{\,m}}\lambda_1^{\,n} - \frac{\lambda_2^{\,n}\,\bar{u}}{1+\lambda_2^{\,m}} + \bar{u}$$

Rearranging and substituting λ_1 by λ_2^{-1} gives

$$u_n = \bar{u}\left(1 - \frac{\lambda_2^{\,m-n} + \lambda_2^{\,n}}{1+\lambda_2^{\,m}}\right) \tag{60}$$

The other two deformation parameters v_n and w_n can be determined in turn by substituting the values of u_n and u_{n-1} in equations (50) and (51)

Stresses and Moments in the Structure

The stresses of the rings, the stringers, and the skin can all be determined by knowing the deformations, or in other words, the strains of the structure. For example, the stress in the ring can be written as

$$\sigma_{frame} = E\,\epsilon_{frame}$$

or

$$\sigma_{frame} = E\,\frac{u_n}{r} \tag{61}$$

Similarly, the stress of the stringer is equal to

$$\sigma_{stringers} = E\,\epsilon_{stringer}$$

$$= E\,\frac{v_n}{l} \tag{62}$$

The longitudinal stress of the skin may be written as

$$\sigma_x = \frac{\epsilon_x + \mu\,\epsilon_z}{1 - \mu^2} E$$

$$= \frac{\frac{v_n}{l} + \mu\,\frac{y}{r}}{1 - \mu^2} E \tag{63}$$

where y is determined from equation (7). The circumferential stress of the skin may be written as

$$\sigma_z = \frac{\epsilon_z + \mu\,\epsilon_x}{1 - \mu^2} E$$

$$= \frac{\frac{y}{r} + \mu\,\frac{v_n}{l}}{1 - \mu^2} E \tag{64}$$

The bending moment of a beam can be written in terms of the deflection. The differential equation of the deflection curve is

$$M = - E\,I\,\frac{d^2y}{dx^2} \tag{65}$$

The second derivative of y with respect to x is

$$\frac{d^2y}{dx^2} = \frac{u_n - u_{n-1}}{2}\,\frac{\pi^2}{l^2}\cos\frac{\pi x}{l} + w_n\,\frac{4\pi^2}{l^2}\cos\frac{2\pi x}{l}$$

Substituting in equation (65) gives

$$M = - E\,I\left(\frac{u_n - u_{n-1}}{2}\,\frac{\pi^2}{l^2}\cos\frac{\pi x}{l} + w_n\,\frac{4\pi^2}{l^2}\cos\frac{2\pi x}{l}\right) \tag{66}$$

It can be seen that the bending moment is maximum at the end of the stringer where the ring joins. At the end of the rigid ring,

$$u_{n-1} = u_0 = 0$$

$$u_n = u_1 = \bar{u}\left(1 - \frac{\lambda_2^{\,m-1} + \lambda_2}{1 + \lambda_2^{\,m}}\right)$$

$$w_n = \frac{\left[2\left(1 + \frac{\psi}{\alpha}\right) - \mu\right]\frac{vr}{\rho\alpha} + \left[\mu^2 - \left(1 + \frac{\psi}{\alpha}\right)\right]u_1}{2\theta\left[\left(1 + \frac{\psi}{\alpha}\right)\left(\frac{\phi}{\rho\alpha} + \frac{3}{2}\right) - \mu^2\right]}$$

and

$$M = -EI\left(\frac{u_1}{2}\frac{\pi^2}{l^2} + w_1\frac{4\pi^2}{l^2}\right)$$

$$= -\frac{\mu^2 EI}{2l^2}(u_1 + 8w_1) \tag{67}$$

Particular Problems

I. Pressurized Cabin with Infinitely Many Equal Spans.

It is obvious that the deformations of each panel of the pressurized cabin structure with infinitely many equal spans are identical. In the general equations,

$$u_{n-1} = u_n = u_{n+1} = u$$

$$v_n = v_{n+1} = v$$

$$w_n = w_{n+1} = w$$

and equations (37), (38) and (39) become

$$\left(\frac{\beta}{\alpha} + 1\right)v + \theta\mu u + w = \frac{vr}{\rho\alpha}$$

$$2\mu u + 2\theta\left(\frac{\psi}{\alpha} + 1\right)v + 2\mu w = \frac{vr}{\rho\alpha} \tag{68}$$

$$u + \theta\mu v + \left(\frac{\phi}{\rho\alpha} + \frac{3}{2}\right)w = \frac{vr}{\rho\alpha}$$

These are the same equations as the simultaneous equations for solving the particular solution in the previous section (equation (48)). The solutions are

$$u = \frac{\frac{\upsilon r}{\rho\alpha}\left[\left(1 + \frac{\psi}{\alpha}\right) - \frac{1}{2}\mu\right]\left[\frac{1}{2} + \frac{\phi}{\rho\alpha}\right]}{\mu^2\left(1 - \frac{\beta}{\alpha}\right) + \left(\frac{3}{2} + \frac{\phi}{\rho\alpha}\right)\left[\left(1 + \frac{\beta}{\alpha}\right)\left(1 + \frac{\psi}{\alpha}\right) - \mu^2\right] - \left(1 + \frac{\psi}{\alpha}\right)} \tag{69}$$

$$v = \frac{\frac{\upsilon r}{\theta\rho\alpha}\left\{\left(\frac{3}{2} + \frac{\phi}{\rho\alpha}\right)\left[\frac{1}{2}\left(1 + \frac{\beta}{\alpha}\right) - \mu\right] + \mu\left(1 - \frac{\beta}{\alpha}\right) - \frac{1}{2}\right\}}{\mu^2\left(1 - \frac{\beta}{\alpha}\right) + \left(\frac{3}{2} + \frac{\phi}{\rho\alpha}\right)\left[\left(1 + \frac{\beta}{\alpha}\right)\left(1 + \frac{\psi}{\alpha}\right) - \mu^2\right] - \left(1 + \frac{\psi}{\alpha}\right)} \tag{70}$$

$$w = \frac{\frac{\upsilon r}{\rho\alpha}\frac{\beta}{\alpha}\left(1 + \frac{\psi}{\alpha} - \frac{1}{2}\mu\right)}{\mu^2\left(1 - \frac{\beta}{\alpha}\right) + \left(\frac{3}{2} + \frac{\phi}{\rho\alpha}\right)\left[\left(1 + \frac{\beta}{\alpha}\right)\left(1 + \frac{\psi}{\alpha}\right) - \mu^2\right] - \left(1 + \frac{\psi}{\alpha}\right)} \tag{71}$$

It can be seen that equations (50) and (51) reduce to equations (70) and (71), respectively, by substituting $u_{n-1} = u_n = u$.

II. Single Span Pressurized Cylinder with End Frames of Infinite Rigidity.

This kind of structure will have only transverse and radial expansion of skin, but no deformation of the rings. For this case the deformation parameter u in equation (58) is zero, and hence the first equation in (58) vanishes. The problem is thus reduced to the solution of the following equation

$$\begin{aligned} 2\,\theta\left(\frac{\psi}{\alpha} + 1\right)v + 2\,\mu\,w &= \frac{\upsilon r}{\rho\alpha} \\ \theta\,\mu\,v + \left(\frac{\phi}{\rho\alpha} + \frac{3}{2}\right)w &= \frac{\upsilon r}{\rho\alpha} \end{aligned} \tag{72}$$

The solutions are

$$w = \frac{\frac{\upsilon r}{\rho\alpha}\left(\frac{\phi}{\rho\alpha} + \frac{3}{2} - 2\mu\right)}{2\theta\left[\left(\frac{\psi}{\alpha} + 1\right)\left(\frac{\phi}{\rho\alpha} + \frac{3}{2}\right) - \mu^2\right]} \tag{73}$$

$$w = \frac{\frac{\upsilon r}{\rho\alpha}\left[2\left(\frac{\psi}{\alpha} + 1\right) - \mu^2\right]}{2\left[\left(\frac{\psi}{\alpha} + 1\right)\left(\frac{\phi}{\rho\alpha} + \frac{3}{2}\right) - \mu^2\right]} \tag{74}$$

III. Single Span Pressurized Cylinder with Fixed End Supports.

This kind of structure will have only radial expansion of skin between the end supports. In this case only the deformation parameter w appears. The solution of this problem is thus based on the equation

$$\left(\frac{\phi}{\rho\alpha} + \frac{3}{2}\right) w = \frac{\upsilon r}{\rho\alpha} \tag{75}$$

and is

$$w = \frac{\frac{\upsilon r}{\rho\alpha}}{\frac{\phi}{\rho\alpha} + \frac{3}{2}} = \frac{\upsilon r}{\phi + \frac{3}{2}\rho\alpha} \tag{76}$$

TESTS OF PRESSURIZED CABIN STRUCTURE AT LOCKHEED AIRCRAFT CORPORATION

Lockheed Aircraft Corporation made a complete investigation of a pressurized test section of the Model 49 fuselage. The following problems were studied in this test:

1. Leakage rate

2. Deflection due to internal pressure

3. Stresses due to internal pressure

4. Bending test

5. Torsion test

6. Floor-support test

7. General instability

8. Frame test

Since, in the present problem, only the effects of pressure are of interest, a summary of the test of the primary structure is given.

Description of test setup.- The general arrangement as well as the dimensions of the test apparatus are shown in figures 5a and 5b. The essential elements of this equipment consist of the following:

1. A full-scale section of the fuselage

2. A large reinforced concrete block which serves as a fixed end to support the test section

3. A rigid steel framework or loading head which was attached to the free end of the test section

The test section was circular in cross section and was tapered with a ratio of approximately 1:10 in the longitudinal direction. The primary structure was composed of a 24S-T alclad framework of channel-section rings and bent-up, J-section stringers to which a skin of 24S-T alclad sheet was attached. The stringers were uniformly spaced at 5° intervals around the periphery of the cylinder, except at the bottom, in which case 2.5° spacing was employed. The stringers were of five different sections, only one of which, the LS-160, made of 0.032-inch 24S-T alclad sheet, was used mostly. This section is given in detail in figure 5b. The rings were spaced at an interval of 18.4 inches. A typical section of the ring is also shown in the same figure. Two thicknesses of skin were used, 0.032-inch sheet on the top and the bottom, and 0.040-inch sheet on the two sides.

The pressurization of the test section was accomplished with the compressed air which was led into the cylinder through a safety valve located within the concrete supporting structure. The air was supplied constantly for balancing the leakage of air through the skin.

The Baldwin-Southwark-type electrical strain gages were used for measuring the stresses. They were mounted upon the surfaces of the members, in which the stresses were to be measured, by cementing them to these surfaces.

Pressure deflections.- The skin deflections were composed of two parts, first, the deflection of the center of the panel relative to the stringers, and secondly, the deflection of the stringer relative to the frame. These deflections were all measured by the dial gages as shown in the diagrammatic sketches in figures 6 and 7. The strange and unexpected result in these figures is that skin between the stringers had an inward deflection. An explanation for this may be that these panels had a slight curvature in the longitudinal direction. The deflection of the stringer between the frame is outward, and is practically directly proportional to the internal pressure.

Pressure stresses.- The results of the pressure stress measurement have been discussed previously and are represented in the plots in figures 2 and 3.

TESTS OF PRESSURIZED CABIN STRUCTURE AT CONSOLIDATED-VULTEE AIRCRAFT CORPORATION

Consolidated-Vultee Aircraft Corporation made a series of tests to measure the stresses in and the deflections of the structure members of a one-half scale "nose-wheel section" of the XB-32 fuselage under maximum operating air pressure. The tests covered two kinds of specimens: the "floored specimen," which was a cylindrical structure with flooring and floor bracing inside, and the "control specimen," which was a perfectly symmetrical cylinder to be used as control in preliminary testing. Only the tests of the control specimen are described here, as this specimen is similar to the structure which is discussed in this paper.

Test setup.- As shown in figure 8, the test section was made with 0.016-inch skin riveted to 0.020-inch angle

stringers with 0.032-inch channel belt frames. The stringers, 52 in number, were distributed uniformly around the periphery of the cylinder. The belt frames, 5 in number, including the 2 end bulkheads, were spaced at an interval of 10 inches.

The test specimen was mounted in a boxlike structure steel jig with the center line of the specimen in a vertical position. The top bulkhead of the specimen was held in a fixed lateral position by means of ball-bearing guide rollers. The effect was that as the specimen expanded under pressure, the top bulkhead could breathe vertically but it was restrained from lateral motion.

Stresses.- The stresses of the control specimen at 6.55 psi measured by the "Celstrain" gage equipment are shown in figure 9. The average values of indicated stresses in the members at 6.55 psi compared with the stresses obtained by simple calculations (equations (3), (4), (5), and (6)) follow: In the stringer - 1300 psi versus 1355 calculated; in the belt frame - 4400 psi versus 6660 calculated; longitudinal skin - 4770 psi versus 5230 calculated; and circumferential skin stress - 11,200 psi versus 8560 calculated. The experimental value of circumferential stress was a maximum value instead of an average value.

Deflections.- Starrett deflection gages reading in 1/1000 inch were used to measure the deflection of the members of the specimens under pressure. The belt frames did not deflect evenly along the periphery, but the average deflection of the center belt frame of the control specimen was 0.018 inch at 6.55 psi. The radial deflections of skin and stringers with respect to end bulkheads at 6.55 psi were shown in figure 10. The quilting of the skin and stringers was from 0.006 to 0.020 inch greater than the belt-frame deflection. In no case was a flattening of the skin between stringers noticed in this area.

ANALYTICAL SOLUTIONS APPLIED TO ACTUAL TEST SECTIONS

I. Tests of Pressurized Cabin Structure at Lockheed Aircraft Corporation.

For simplicity in analysis, the following assumptions are made:

1. Same type of stringers (LS-160-0.032)

2. Same type of rings

3. Same skin thickness (0.032 in.) around periphery

4. Same stringer spacing (5°)

5. Uniform fuselage cross section

The pressure difference is assumed to be 5 psi throughout the entire computations. The important dimensions and figures are shown in the following list:

$p = 5$ psi

$E = 10,300,000$ psi

$\mu = 0.3$

$l = 18.4$ in.

$t = 0.032$ in.

$r = 65$ in.

$s = 72$

$m = 10$

$A = 0.0617$ sq in.

$I = 0.0096$ in.^{4}

$A' = 0.238$ sq in.

$I' = 0.317$ in.^{4}

The following nondimensional parameters are derived:

$$\upsilon = p/E = 5/10,300,000 = 0.485 \times 10^{-6}$$

$$\phi = 4\pi^3 sI/l^4 = 4\pi^3 \times 72 \times (0.0096)/(18.4)^4$$

$$= 0.748 \times 10^{-3}$$

$$\rho = t/r = 0.032/65 = 0.493 \times 10^{-3}$$

$\beta = A'/tl = 0.238/(0.032)\ (18.4) = 0.405$

$\theta = r/l = 65/18.4 = 3.53$

$\alpha = 1/1-\mu^2 = 1/0.91 = 1.1$

$\psi = sA/2\pi rt = (72)\ (0.0617)/2\pi(65)\ (0.032) = 0.34$

For further computation the following values are also calculated:

$\phi/\rho\alpha = 0.748 \times 10^{-3}/0.493 \times 10^{-3} \times 1.1 = 1.38$

$\phi/\rho\alpha + 3/2 = 2.88$

$\phi/\rho\alpha - 1/2 = 0.88$

$\phi/\rho\alpha + 1/2 = 1.88$

$\psi/\alpha = 0.34/1.1 = 0.309$

$1 + \psi/\alpha = 1.309$

$\beta/\alpha = 0.405/1.1 = 0.368$

$\beta/\alpha + 3/4 = 1.118$

$\beta/\alpha - 1/4 = 0.118$

$1 - \beta/\alpha = 0.632$

$\beta/\alpha + 1 = 1.368$

$\mu^2 = (0.3)^2 = 0.09$

$\frac{\upsilon r}{\rho\alpha} = (0.485 \times 10^{-6})\ (65)/(0.493 \times 10^{-3})\ (1.1) = 0.0581$

The value of K in equation (55) is

$$K = \frac{(2.88)\ [(2)\ (1.309)\ (1.118) - 0.09] - 1.309 - (2)\ (0.09)\ (0.118)}{(0.5)\ (0.88)\ [(0.5)\ (1.309) - 0.09] - (0.25)\ (0.09)}$$

$= 30.4$

The value of λ_2 in equation (60) is approximately equal to $-1/K$ or

$$\lambda_2 = -1/30.4 = -0.0329$$

It can be seen from equation (60) that the expansions of the frames are nearly identical, and that this problem can be reduced to that of pressurized cabin with infinitely many spans. By using equations (69), (70), and (71), it is found that

$$u' = \frac{(0.0581)\ (1.309 - 0.15)\ (1.88)}{(0.09)(0.632) + (2.88)[(1.368)(1.309) - 0.09] - 1.309}$$

$$= \frac{0.1265}{3.648}$$

$$= 0.0347 \text{ in.}$$

$$v = \frac{(0.0581)\left[(2.88)\left(\frac{1.368}{2} - 0.3\right) + (3)\ (0.632) - 0.5\right]}{(3.53)\ (3.648)}$$

$$= 0.00361 \text{ in.}$$

$$w = \frac{(0.0581)\ (0.368)\ (1.309 - 0.15)}{(3.648)}$$

$$= 0.00683 \text{ in.}$$

A comparison between the strain energy of expansion and of bending of ring is shown.

Energy of expansion (equation (25))

$$V = \frac{\pi A' E}{r} u^2$$

$$= \frac{\pi \times (0.238)\ E}{65} (0.0347)^2$$

$$= 1.38 \times 10^{-5}\ E$$

Energy of bending (equation (29))

$$V = \frac{\pi E I'}{r^3} u$$

$$= \frac{\pi \times E \times 0.317}{65^3} \times (0.0347)$$

$$= 1.26 \times 10^{-7} E$$

It is obvious that the energy of bending of ring can be neglected.

The strains and stresses of the structure are derived from the values of deformation parameter.

<u>Longitudinal Strain of Skin</u> (Strain of Stringer)

$$\epsilon_x = v/l = 0.00361 / 18.4 = 0.000196$$

<u>Circumferential Strain of Skin</u> (Av.)

$$\epsilon_y = \frac{u + w}{r} = \frac{0.0415}{65} = 0.000639$$

<u>Strain of Frame</u>

$$\epsilon_{frame} = \frac{u}{r} = \frac{0.0347}{65} = 0.000534$$

<u>Longitudinal Stress of Skin</u>

$$\sigma_x = \frac{\epsilon_x + \mu \epsilon_z}{1 - \mu^2} E$$

$$= \frac{0.000196 + (0.3)(0.000639)}{0.91} \times 10,300,000$$

$$= 4390 \text{ psi}$$

Circumferential Stress of Skin

$$\sigma_z = \frac{\epsilon_z + \mu\,\epsilon_x}{1 - \mu^2}\,E$$

$$= \frac{0.000639 + (0.3)\,(0.000196)}{0.91} \times 10{,}300{,}000$$

$$= 7900 \text{ psi}$$

Stringer Stress

$$\sigma_{stringer} = \epsilon_x\,E$$

$$= 0.000196 \times 10{,}300{,}000$$

$$= 2020 \text{ psi}$$

Frame Stress

$$\sigma_{frame} = \epsilon_{frame}\,E$$

$$= 0.000534 \times 10{,}300{,}000$$

$$= 5500 \text{ psi}$$

The following is the comparison between the experimental results and the calculated values.

Experimental Results

$$\frac{\sigma_{frame}}{\sigma_z} = \frac{3800}{5500} = 0.690$$

$$\frac{\sigma_{stringer}}{\sigma_x} = \frac{1400}{3750} = 0.374$$

Calculated Results

$$\frac{\sigma_{frame}}{\sigma_z} = \frac{5500}{7900} = 0.697$$

$$\frac{\sigma_{stringer}}{\sigma_x} = \frac{2020}{4390} = 0.460$$

These results are within a reasonable check.

II. Tests of Control Specimen at Consolidated-Vultee Aircraft Corporation.

A list of the important dimensions and figures for the control specimen at Consolidated-Vultee Aircraft Corporation is given.

$p = 6.55$ psi

$E = 10,300,000$ psi

$\mu = 0.3$

$l = 10$ in.

$t = 0.016$ in.

$r = 28.5$ in.

$s = 52$

$m = 4$

$A = 0.025$ sq in. (see appendix)

$I = 0.00102$ in.^{4}

$A' = 0.0744$ sq in.

$I' = 0.0176$ in.^{4}

The following nondimensional parameters are derived:

$$\upsilon = p/E = 6.55/10.3 \times 10^6 = 0.635 \times 10^{-6}$$

$$\phi = 4\pi^3 sI/l^4 = 4\pi^3\ 52\ (0.00102)/10^4$$

$$= 0.659 \times 10^{-3}$$

$$\rho = t/r = 0.016/28.5 = 0.562 \times 10^{-3}$$

$$\beta = A'/tl = 0.0744/0.016 \times 10 = 0.465$$

$$\theta = r/l = 28.5/10 = 2.85$$

$$\alpha = 1/1-\mu^2 = 1/0.91 = 1.1$$

$$\psi = sA/2\pi rt = (52)\ (0.025)/2\pi(28.5)\ (0.016)$$
$$= 0.536$$

For further computation the following values are also calculated.

$$\phi/\rho\alpha = 0.659 \times 10^{-3}/(0.562 \times 10^{-3})\ (1.1)$$
$$= 1.07$$

$$\phi/\rho\alpha + 3/2 = 2.57$$

$$\phi/\rho\alpha - 1/2 = 0.57$$

$$\phi/\rho\alpha + 1/2 = 1.57$$

$$\psi/\alpha = 0.536/1.1 = 0.488$$

$$1 + \psi/\alpha = 1.488$$

$$\beta/\alpha = 0.465/1.1 = 0.423$$

$$\beta/\alpha + 3/4 = 1.173$$

$$\beta/\alpha - 1/4 = 0.173$$

$$1 - \beta/\alpha = 0.577$$

$$\beta/\alpha + 1 = 1.423$$

$$\mu^2 = (0.3)^2 = 0.09$$

$$\frac{\upsilon r}{\rho\alpha} = 0.635 \times 10^{-6} \times 28.5/0.562 \times 10^{-3} \times 1.1$$
$$= 0.0293$$

The value of K in equation (55) is

$$K = \frac{(2.57)[(2)(1.488)(1.173) - 0.09] - 1.488 - (2)(0.09)(0.173)}{(0.5)(0.57)\ [(0.5)\ (1.488) - 0.09]\ (0.25)\ (0.09)}$$

$$= 44$$

The value of λ_2 in equation (60) is approximately equal to $-1/K$ or

$$\lambda_2 = -1/44 = -0.0227$$

The value of $\bar{u}$ is from equation (59)

$$\bar{u} = \frac{(0.0293)\ (1.488 - 0.15)\ (1.57)}{(0.09)(0.577) + (2.57)\ [(1.423)(1.488) - 0.09] - 1.488}$$

$$= 0.0163 \text{ in.}$$

The expansion of the center belt frame is

$$u_2 = \bar{u}\left(1 - \frac{\lambda_2^2 + \lambda_2^2}{1 + \lambda_2^4}\right)$$

$$= (0.0163)\left(1 - \frac{(2)\ (-0.0227)^2}{1 + (0.0227)^4}\right)$$

$$= 0.0163 \text{ in.}$$

The expansion of its adjacent frame is

$$u_1 = \bar{u}\left(1 - \frac{\lambda_2^3 + \lambda_2}{1 + \lambda_2^4}\right)$$

$$= (0.0163)\ (1 + 0.0227)$$

$$= 0.0167 \text{ in.}$$

The parameters of longitudinal expansion and radial quilting of the skin between these two rings are determined by substituting the values of u_1 and u_2 in equations (50) and (51)

$$v_2 = \frac{(2.57 - 0.6)(0.0293) - (0.3)\ (1.57)(0.0167 + 0.0163)}{(2)\ (2.85)\ [(1.488)\ (2.57) - 0.09]}$$

$$= 0.00199 \text{ in.}$$

$$w_2 = \frac{[(2)(1.488) - 0.3](0.0293) + (0.09 - 1.488)(0.0167 + 0.0163)}{(2)\ [(1.488)\ (2.57) - 0.09]}$$

$$= 0.00435 \text{ in.}$$

A comparison between the strain energy of expansion and of bending of ring is shown.

Energy of expansion (equation (25))

$$V = \frac{\pi A' E}{r} u_n^2$$

$$= \frac{\pi \times 0.0744 \times E \times (0.0163)^2}{28.5}$$

$$= 2.17 \times 10^{-6} E$$

Energy of bending (equation (29))

$$V = \frac{\pi E I'}{r^3} u_n$$

$$= \frac{\pi \times E \times 0.0176}{(28.5)^3} (0.0163)$$

$$= 3.9 \times 10^{-8} E$$

It is obvious that the energy of bending of ring can be neglected here in the discussion.

The strains and stresses are derived from the deformation parameters.

Longitudinal Strain of Skin (Strain of Stringer)

$$\epsilon_x = v_2/l = 0.00199/10 = 0.000199$$

Circumferential Strain of Skin

Average Value

$$\epsilon_z = \frac{(u_1 + u_2)/2 + w_2}{r} = \frac{\frac{(0.0167) + (0.0163)}{2} + 0.00435}{28.5}$$

$$= 0.000734$$

Maximum Value

$$\epsilon_z \text{ (max)} = \frac{(u_1 + u_2)/2 + 2\ w_2}{r}$$

$$= \frac{\frac{0.0167 + 0.0163}{2} + (2)\ (0.00435)}{28.5}$$

$$= 0.000954$$

Strain of Frame

$$\epsilon_{frame} = u_2/r = 0.0163/28.5 = 0.000572$$

Longitudinal Stress of Skin

$$\sigma_x = \frac{\epsilon_x + \mu\ \epsilon_z}{1 - \mu^2}\ E$$

$$= \frac{0.000199 + (0.3)\ (0.000734)}{0.91} \times 10{,}300{,}000$$

$$= 4750 \text{ psi}$$

Circumferential Stresses of Skin

Average

$$\sigma_z = \frac{0.000734 + (0.3)\ (0.000199)}{0.91} \times 10{,}300{,}000$$

$$= 9{,}000 \text{ psi}$$

Maximum

$$\sigma_z \text{ (max)} = \frac{0.000954 + (0.3)\ (0.000199)}{0.91} \times 10{,}300{,}000$$

$$= 10{,}800 \text{ psi}$$

Stringer Stress

$$\sigma_{stringer} = 0.000199 \times 10,300,000$$
$$= 2050 \text{ psi}$$

Frame Stress

$$\sigma_{frame} = 0.000572 \times 10,300,000$$
$$= 5490 \text{ psi}$$

A comparison between the results determined from experiment, from empirical formulas (equations (3), (4), (5), and (6) and from the mathematical analysis is shown in the following table.

TABLE I

COMPARISON OF STRESSES IN PRESSURIZED CABIN STRUCTURE

	From experiment (psi)	From empirical formula (psi)	From mathematical analysis (psi)
Longitudinal skin stress	4,770	5,230	4,750
Circumferential skin stress (av.)	----------	8,560	9,000
Circumferential skin stress (max.)	11,200	----------	10,800
Stringer stress	1,300	1,355	2,050
Frame stress	4,400	6,660	5,490

The expansion of the center belt frame is calculated to be 0.0163 inch as compared with the experimental value 0.018 inch (av.).

DISCUSSION OF RESULTS AND SUGGESTIONS FOR FURTHER DEVELOPMENT

From the comparisons between the experimental results and the mathematical solutions, the following facts can be noticed:

1. The calculated values of skin stresses and frame stress all give a satisfactory check.

2. The calculated values of stringer stresses always exceed the experimental values.

3. The calculated frame deflection checks very well with the values determined from experiment.

One of the reasons for the deviations of the mathematical solutions from the experimental values is, of course, due to the approximation of the assumption in the energy method. In the assumed function of the deflection curve, only the first term of the Fourier series has been used. However, by noticing that in the result, only the solution of the stringer stress has large deviation from the experimental value, it seems that there may be something wrong in the assumption. The assumption that the skin expands uniformly along the periphery, does not agree with either of the two tests described here. In the test at Lockheed Aircraft Corporation the skin between stringers had an inward deflection. In the test at Consolidated-Vultee Corporation the skin between the stringers deflects more as shown in figure 10.

In calculating the energy of bending of stringers only the moment of inertia of the stringer was considered. However, for a structure of circular shell with longitudinal stiffeners, there is a redistribution of stresses between skin and stiffeners. A better result might be expected if an effective flexural rigidity (EI) were introduced.

One more reason for the deviations between the calculated and tested results lies on the deviation of test specimen from the ideal structure. The nonuniform stress or deflection distribution clearly shows the unsymmetry in construction. The fixity between skin and frames depends very much on the workmanship during the assembly of the test specimen.

It might be suggested that further experimental investigations be made to verify the deformation of the structure and to develop an empirical formula for the effective EI of the skin and stiffener combination.

Further developments dealing with the pressurized cabin structure would be the analysis of the following types of structures:

1. Fuselage with nonuniform cross section - either tapered or curved

2. Spherical or ellipsoidal heads of the pressure vessel

3. The connection between the end and the main structures

Massachusetts Institute of Technology,
Cambridge, Mass., October 15, 1944.

APPENDIX

Computation of Section Properties of Test Specimens

I. Test Specimens at Lockheed Aircraft Corporation (Figs. 5a and 5b)

(1) Area of ring =

$$\left[(0.512 + 2.648 + 0.586 + 0.199) + 3 \times \frac{\pi}{2} \times \left(0.125 + \frac{0.051}{2}\right)\right] \times 0.051$$

$$= (3.945 + 0.707)\ 0.051$$

$$= 4.652 \times 0.051$$

$$= 0.238 \text{ in.}^2$$

(2) Moment of inertia of ring. The moment of inertia is computed approximately by assuming straight bends at the corners. The position of the neutral axis from the top chord is equal to

$$\frac{3 \times 1.5 \times 0.9375 \times 3 + 0.375 \times 2.812}{3 + 0.9375 + 0.375 + 2.812 + 0.6875} = \frac{8.37}{5} = 1.675 \text{ in.}$$

The moment of inertia is computed through the following tabular arrangement:

Part	Length (l)	d^2	ld^2
Top chord	0.6875	1.625^2	1.82
Web	3.0	$.175^2$	.09
Lower chord	.9375	1.30^2	1.58
Lower leg	.375	1.138^2	.48
		Σld^2 =	3.97

$$I_o \text{ (Web)}/t = 3^3/12 = \underline{2.25}$$

$$\text{Moment of Inertia} = 6.22 \times 0.051$$

$$= 0.317 \text{ in.}^4$$

(3) Section properties of stringer.

The following table presents the computation of the area, the moments of length taken at the base of the cross section, and the distance from the base to the neutral axis.

Part		Length				Arm		Length moment
Top arc		× 0.2035	=	0.64	×	0.9257	=	0.593
Web				.6555	×	.4688	=	.308
Lower corner	$\frac{1}{2}$	× 0.141	=	.0705	×	.0514	=	.004
Lower leg				.5625	×		=	———
		Total Length	=	1.9285	Total Moment		=	0.9046
			×	.032				
		Total Area	=	0.0617 in.^{2}				

$$\text{Distance from the base to the neutral axis} = \frac{0.9046}{1.9285} = 0.490 \text{ in.}$$

The following table presents the computation of the moment of inertia of the stringer.

Part	Length (l)	d^2	ld^2
Top arc	0.64	$(0.4357)^2$	0.122
Web	.6555	$(.0212)^2$	.003
Lower corner	.0705	$(.439)^2$	.014
Lower leg	.5625	$(.49)^2$	.135
		Σld^2 =	0.274

$$\frac{I_o}{t}(\text{Web}) = \frac{(0.6555)^3}{12} = .024$$

$$\frac{I_o}{t}(\text{Arc}) = (0.2035)^3\left(\frac{\pi}{2} - \frac{2 \times 2}{\pi}\right) = .002$$

$$\frac{I}{t} = 0.300$$

The moment of inertia = 0.300 × 0.032 = 0.0096 in.^{4}

A summary of the section properties of the specimens at Lockheed Aircraft Corporation is given in the following table.

Stringer area	A	0.238	in.^{2}
Stringer moment of inertia	I	.317	in.^{4}
Frame area	A'	.0617	in.^{2}
Frame moment of inertia	I'	.0096	in.^{4}

II. Test Specimen at Consolidated-Vultee Aircraft Corporation (Fig. 8)

(1) Ring

$$\text{Area } (A') = (1.20 + 2 \times 0.5625) \times 0.032$$

$$= 2.325 \times 0.032$$

$$= 0.0744 \text{ in.}^2$$

Moment of Inertia (I)

$$= \left[\frac{1.20^3}{12} + 2 \times 0.5625 \times (0.6)^2\right] \times 0.032$$

$$= 0.032\ (0.144 + 0.405)$$

$$= 0.032 \times 0.549$$

$$= 0.0176 \text{ in.}^4$$

(2) Stringer

Area (A) $= 2 \times \frac{5}{8} \times 0.020 = 0.025$ in.^{2}

Neutral axis position — 5/32 from top leg

Moment of Inertia (I)

$$= \left[\frac{5}{8} \times \left(\frac{5}{32}\right)^2 \times 2 + \left(\frac{5}{8}\right)^3 \times \frac{1}{12}\right] \times 0.020$$

$$= (0.0305 + 0.0203) \times 0.020$$

$$= 0.0508 \times 0.020$$

$$= 0.00102 \text{ in.}^4$$

REFERENCES

1. Younger, John E.: Structural and Mechanical Problems Involved in Pressure (Supercharged) Cabin Design. Jour. Aero. Sci., vol. 5, no. 5, March 1938, pp. 181-185.

2. Angle, Glenn D., ed.: Aerosphere - 1942. Aircraft Pub. (New York), 1942, p. A-56.

3. Engelhardt, Lloyd F.: Some Structural Problems Pertaining to Pressurized Fuselages. Jour. Aero. Sci., vol. 6, no. 8, June 1939, pp. 319-322.

4. Howland, W. L., and Beed, C. F.: Tests of Pressurized Cabin Structures. Jour. Aero. Sci., vol. 8, no. 1, Nov. 1940, pp. 17-23.

5. Howland, W. L.: An Investigation of the Strength and Other Characteristics of the Model-49 Fuselage Test Section. Lockheed Rep. No. 1893, Lockheed Aircraft Corp. (Burbank, Calif.), July 23, 1942 (rev. Nov. 26, 1942).

6. Anon.: Pressure Tests of XB-32 Airplane Fuselage Structure - One Half Scale - XB-32 Airplane. Consolidated Rep. No. SG-879, Consolidated-Vultee Aircraft Corp. (San Diego, Calif.), Oct. 7, 1943.

7. Timoshenko, S.: Strength of Materials. Pt. I, ch. X. D. Van Nostrand Co., Inc. (New York), 1942.

8. Timoshenko, S.: Theory of Elasticity. Chs. IV and I. McGraw-Hill Book Co., Inc. (New York), 1934.

9. Niles, Alfred S., and Newell, Joseph S.: Airplane Structure. Pt. II. John Wiley & Son, Inc. (New York), 1943, p. 266.

10. Milne-Thomson, L. M.: The Calculus of Finite Differences. Ch. XIII, MacMillan & Co., Ltd. (London), 1933, pp. 384-420.

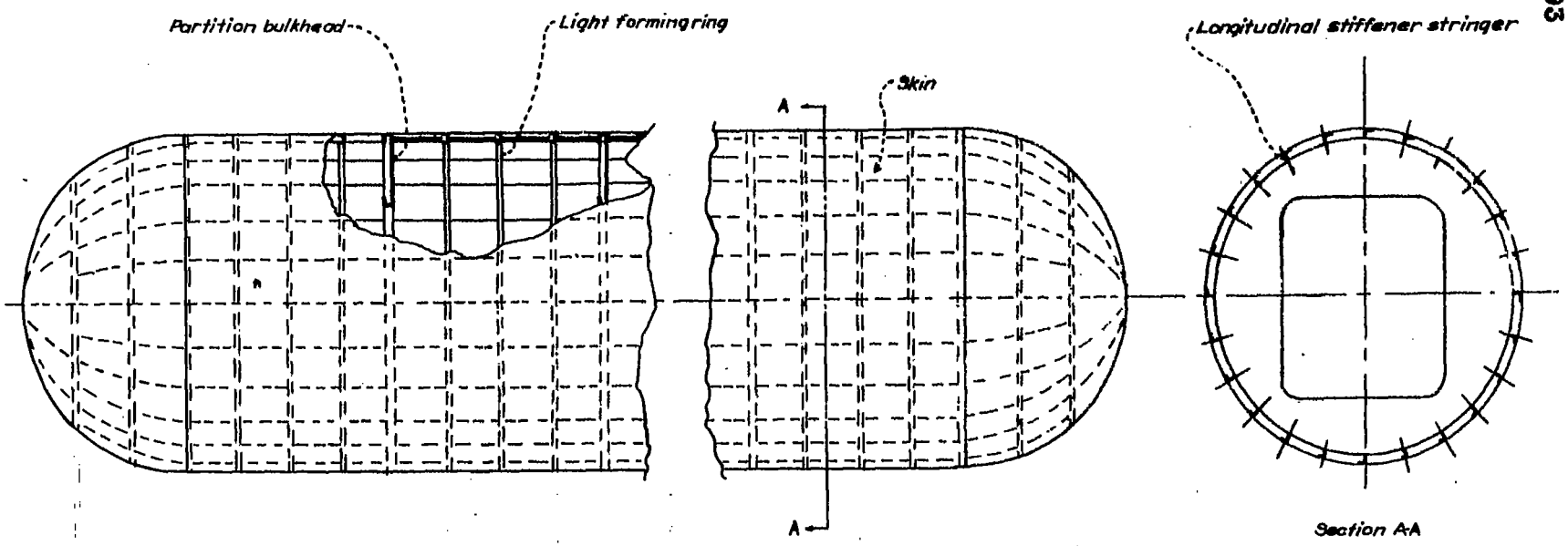

Figure 1.- Pressurized cabin structure.

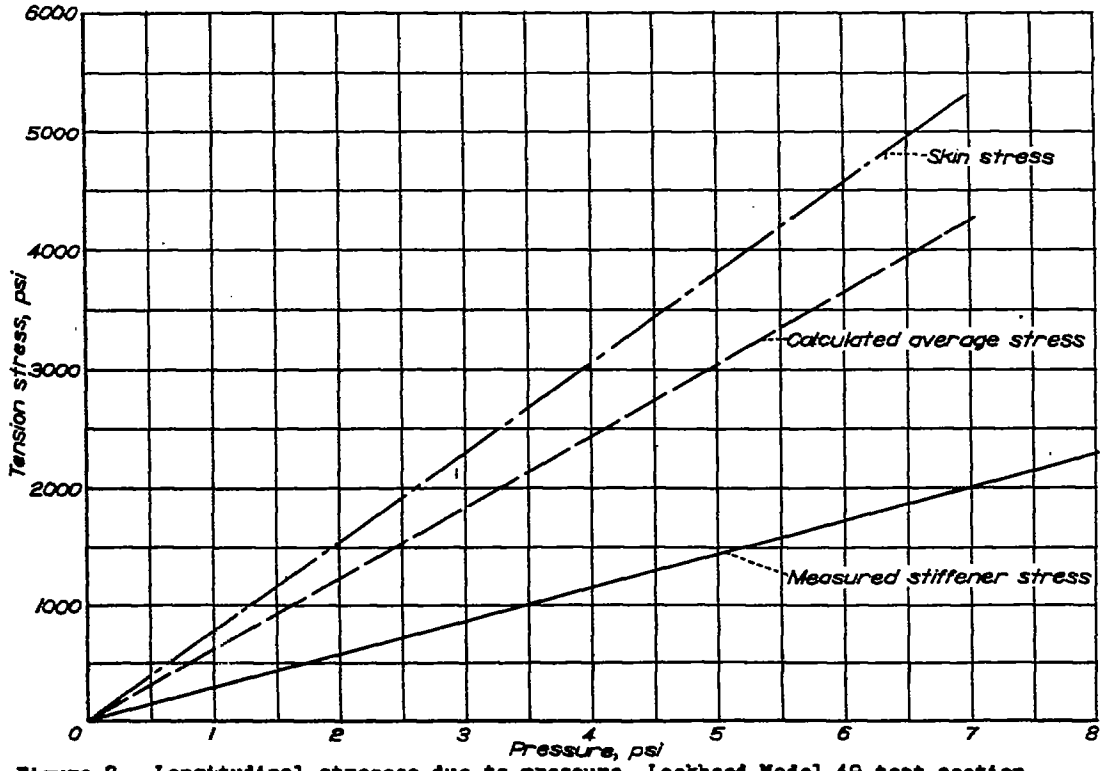

Figure 2.- Longitudinal stresses due to pressure, Lockheed Model 49 test section. Ratio of skin area/stiffener area = 2.08; skin thickness = .032 and .040; radius of curvature = 66 in.

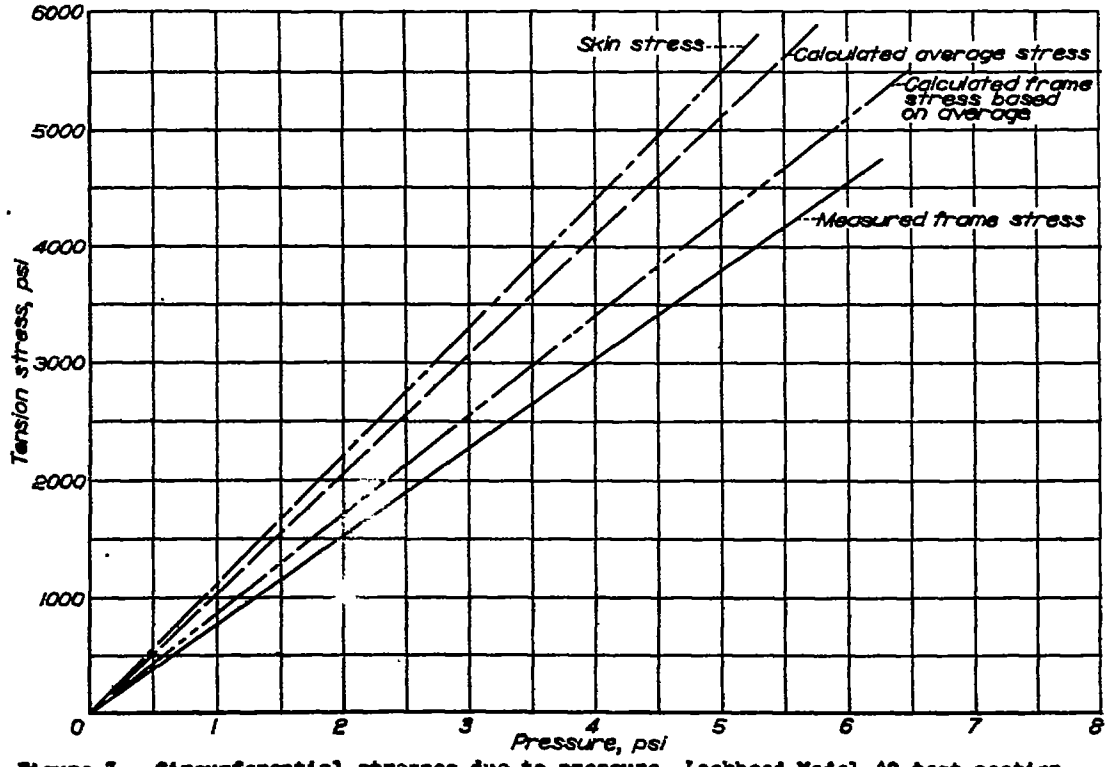

Figure 3.- Circumferential stresses due to pressure, Lockheed Model 49 test section. Ratio of skin area/frame area = 2.35.

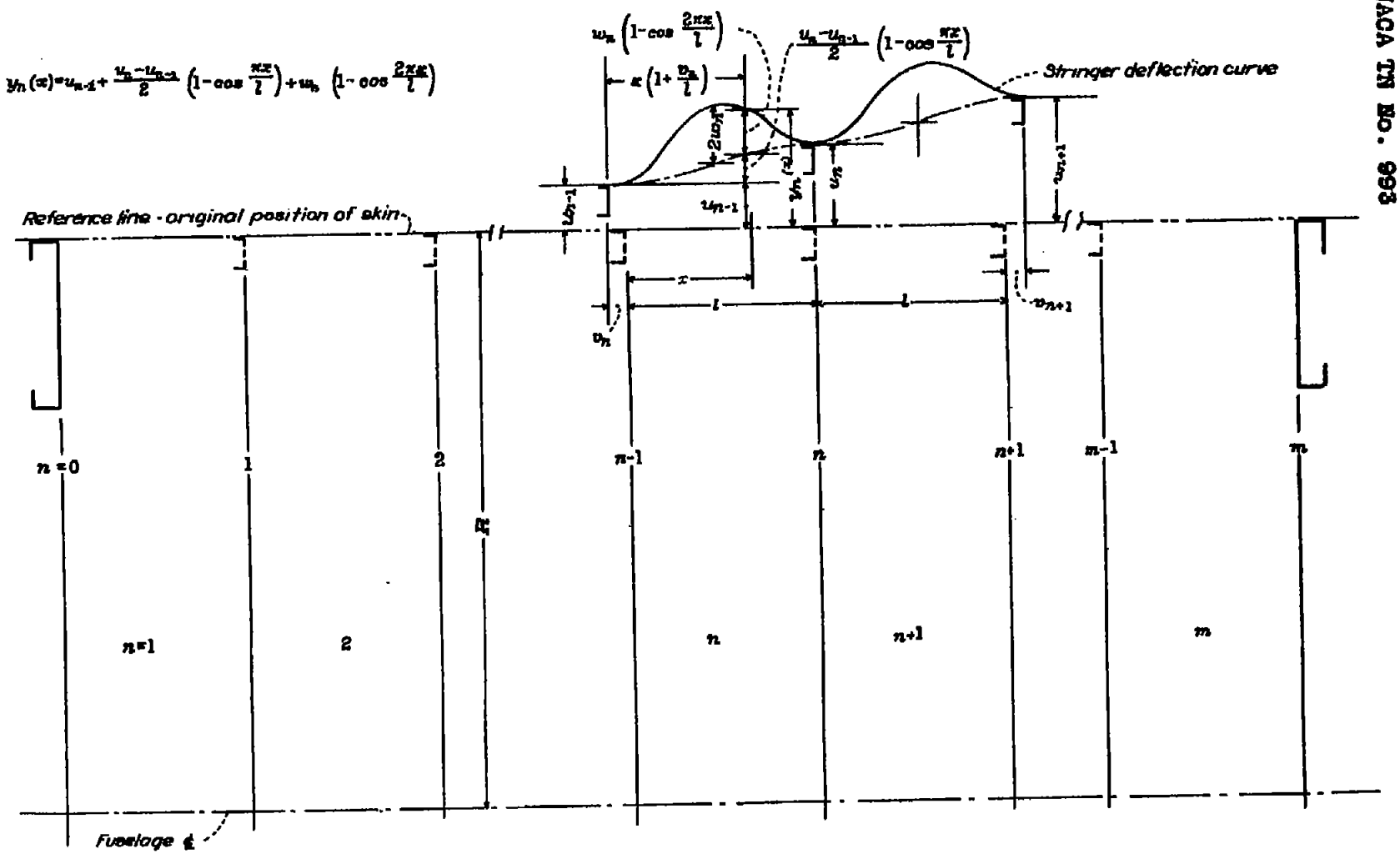

Figure 4.- Deformation of structure.

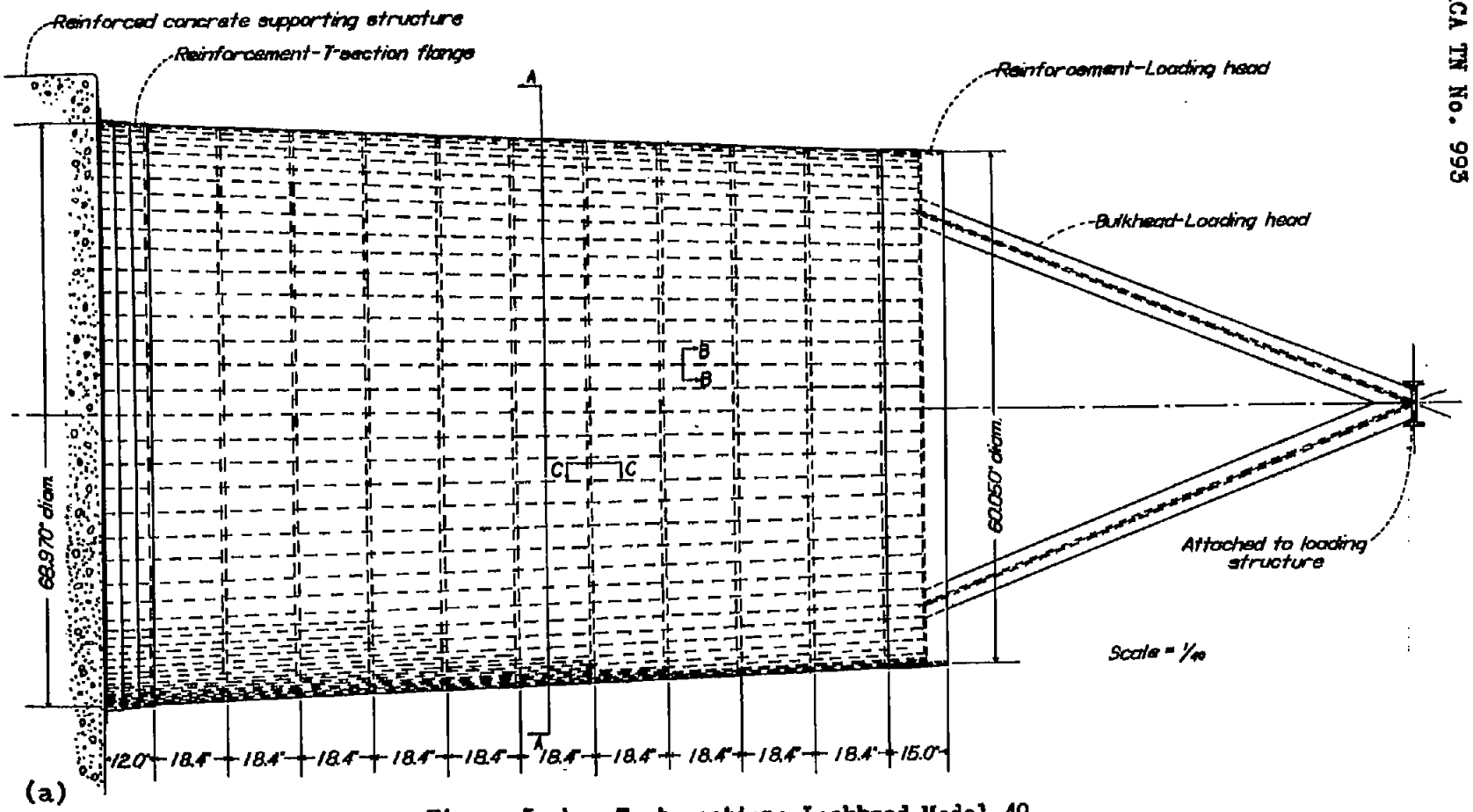

(a)

Figure 5a,b.- Test section; Lockheed Model 49.

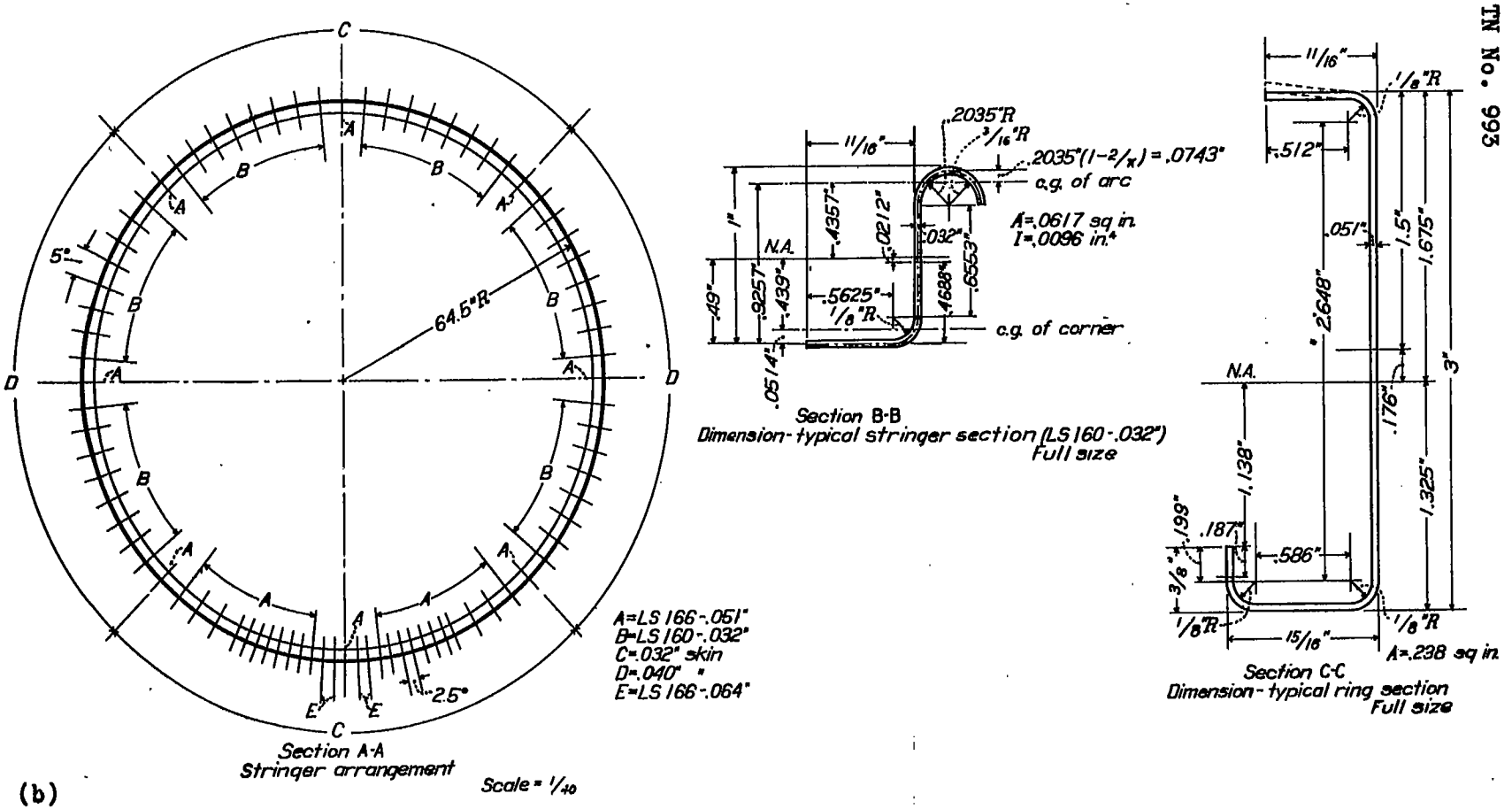

(b)

Figure 5.- Concluded.

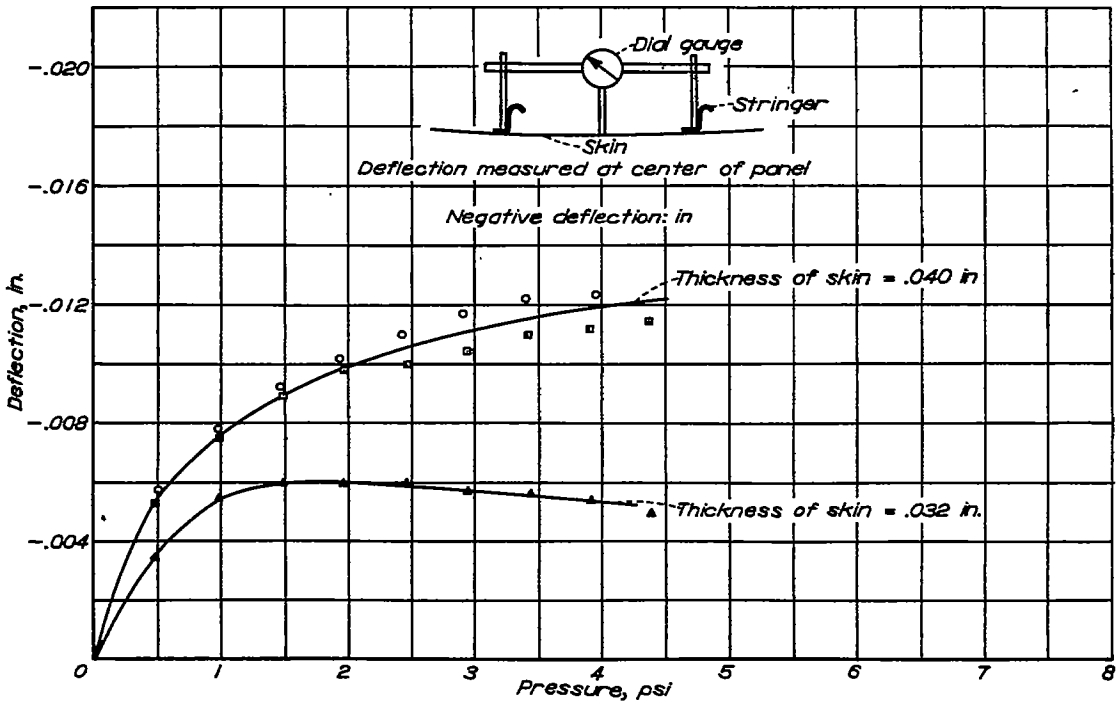

Figure 6.- Skin deflection relative to stiffener against pressure, Lockheed Model 49 test section. Stiffener spacing = 6 in.; frame spacing = 18.4 in.; radius of curvature = 66 in.

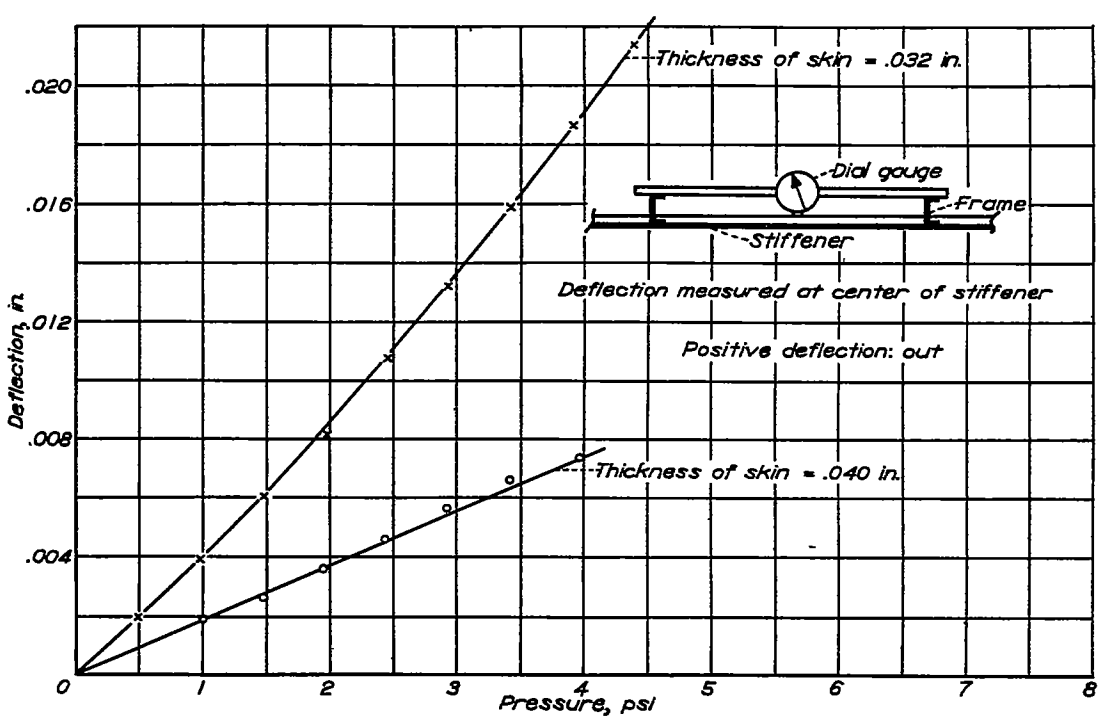

Figure 7.- Stiffener deflection relative to frame against pressure, Lockheed Model 49 test section. Stiffener spacing = 6 in.; frame spacing = 18.4 in.; stiffener = .00984 in.^{4}; radius of curvature across panel = 66 in.; radius of curvature along panel = 4500 in.

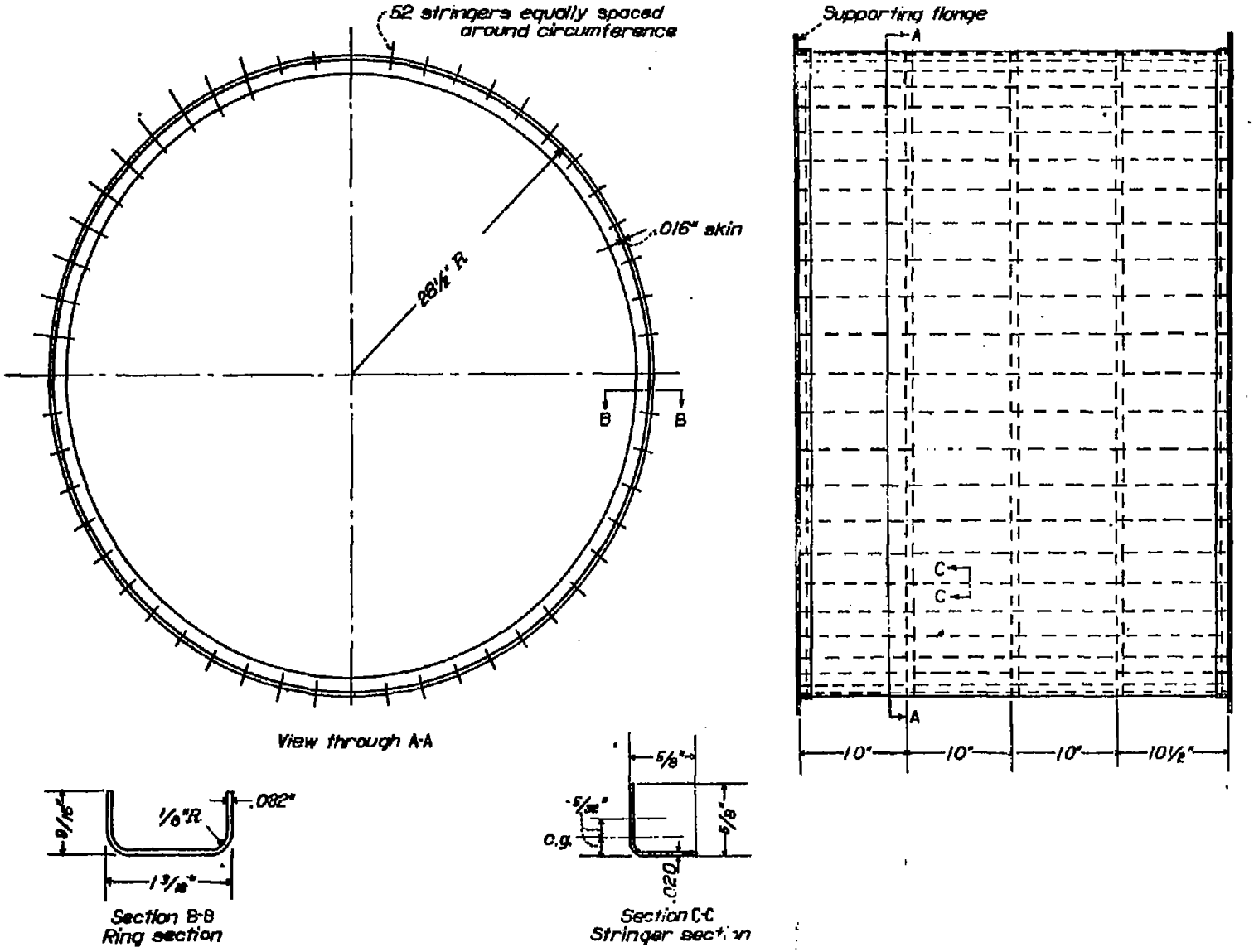

Figure 8.- Test specimen-XB-32 fuselage; Consolidated-Vultee Aircraft Corporation.

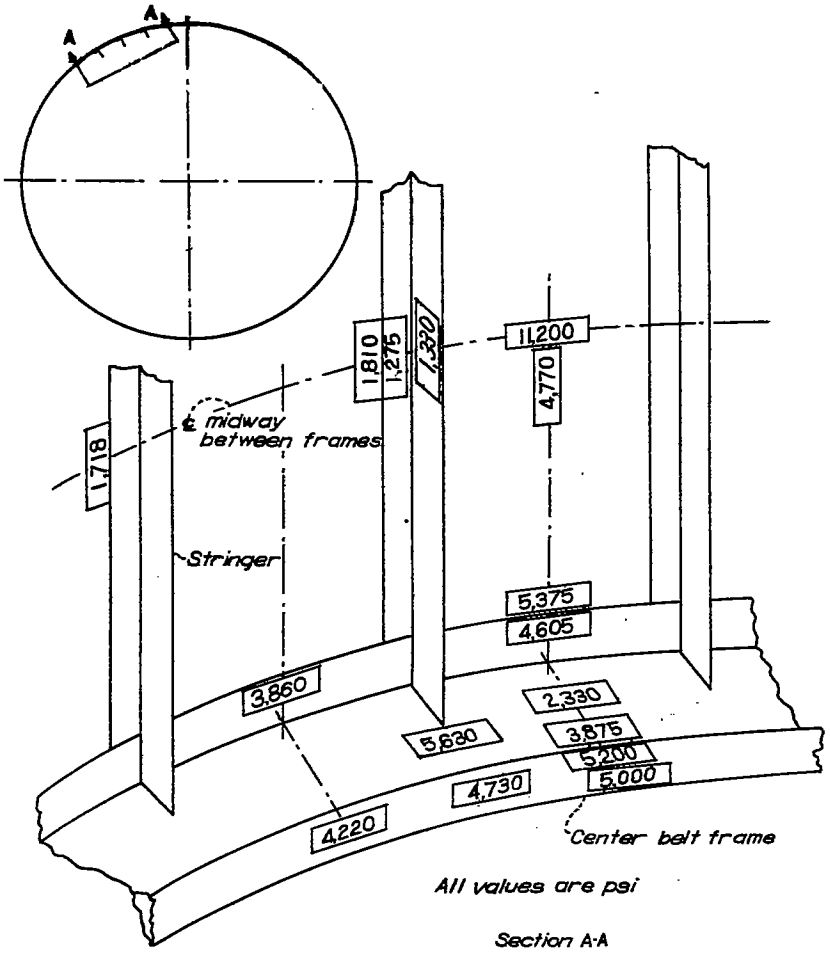

Figure 9. - Celstrain gauge installation and stresses in control specimen at 6.55 psi. 1/2 scale test section; Consolidated XB-32 airplane.

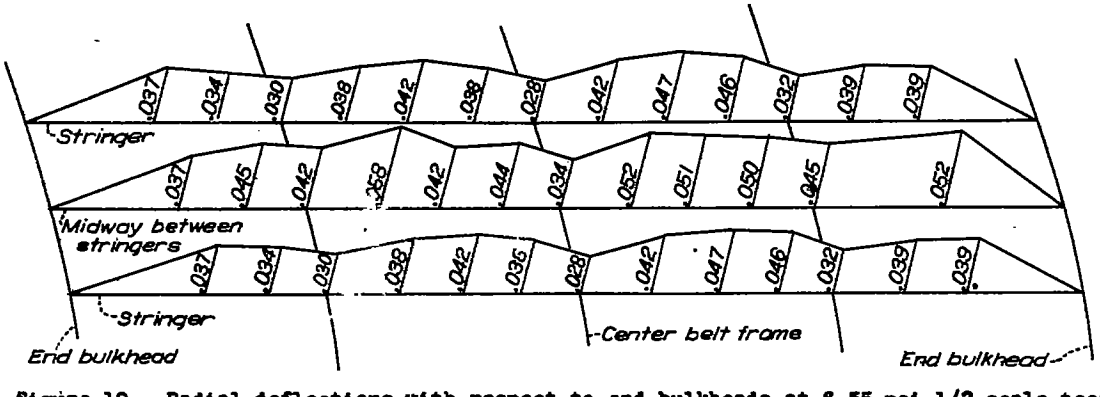

Figure 10.- Radial deflections with respect to end bulkheads at 6.55 psi. 1/2 scale test section; Consolidated XB-32 airplane.