REPORT No. 847

CRITICAL COMBINATIONS OF SHEAR AND TRANSVERSE DIRECT STRESS FOR AN INFINITELY LONG FLAT PLATE WITH EDGES ELASTICALLY RESTRAINED AGAINST ROTATION

By S. B. Batdorf and John C. Houbolt

SUMMARY

An exact solution and a closely concurring approximate energy solution are given for the buckling of an infinitely long flat plate under combined shear and transverse direct stress with edges elastically restrained against rotation. It was found that an appreciable fraction of the critical stress in pure shear may be applied to the plate without any reduction in the transverse compressive stress necessary to produce buckling. An interaction formula in general use was shown to be decidedly conservative for the range in which it is supposed to apply.

INTRODUCTION

In the design of stressed-skin structures, consideration must sometimes be given to the critical stresses for a sheet under a combination of shear and direct stress. The upper surface of a wing in normal flight, for example, is subjected to combined shear and compressive stress, and the lower surface is subjected to combined shear and tensile stress. The upper surface may then buckle at a lower compressive or shear stress than if either stress were acting alone. The critical shear stress for the lower surface may be increased by the presence of the tensile stress.

If the wing has closely spaced chordwise stiffeners, the skin between two adjacent stiffeners may be regarded as a long sheet slightly curved in the longitudinal or chordwise direction, straight in the transverse or spanwise direction, and loaded in shear and transverse direct stress. A conservative preliminary estimate of the critical stresses may be obtained if the sheet is considered to be flat and infinitely long. In the present paper, the critical stresses are computed for an infinitely long flat plate loaded as indicated in figure 1 (a). The corresponding idealization of the case of a wing with spanwise stiffeners, shown in figure 1 (b), was treated in reference 1.

CONVENTIONAL INTERACTION FORMULAS

For buckling of structures under combined loading conditions, no general theory has been developed that is applicable to all cases. Stress ratios (reference 2), however, provide a convenient method of representing such conditions. For example, the ratio of the shear stress actually present in a structure to the critical shear stress of the structure when no other stresses are present may be called the shear-stress ratio. Stress ratios may similarly be defined for each type of stress occurring in the structure.

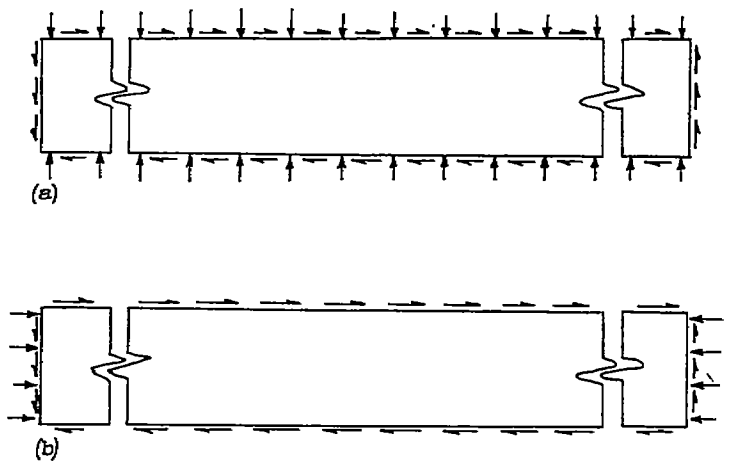

(a) Type of loading problem solved in present paper.
(b) Type of loading problem solved in reference 1.

Figure 1.—Buckling of an infinitely long plate under combined loads.

It is generally assumed that equations of the type

$$R_1^p+R_2^q+R_3^r+\ .\ .\ .\ =1 \tag{1}$$

may be used to express the buckling conditions in the case of combined loading (reference 3, pp. 1–18). In equation (1), R_1, R_2, and R_3 are stress ratios and p, q, and r are exponents chosen to fit the known results. (All symbols are defined in appendix A.) Such a formula gives the correct results when only one type of loading is present and has the further advantage of being nondimensional. Equation (1) implies, moreover, that the presence of any positive fraction of the critical stress of one type reduces the amount of another type of stress required to produce buckles; this implication appears reasonable and has been proved true in some cases (references 1, 2, and 4).

In reference 2 the following interaction formula is given for an infinitely long plate with clamped edges loaded in shear and longitudinal compression:

$$R_s^{1.5}+R_c=1 \tag{2}$$

where R_s is shear-stress ratio and R_c is longitudinal direct-stress ratio. The same formula is recommended in reference 3 for general use for the buckling of any flat rectangular plate, regardless of the direction of compression and the degree of edge restraint.

Later theoretical work (reference 1) shows that, to a high degree of accuracy, for an infinitely long plate with any degree of edge restraint loaded in shear and longitudinal compression

$$R_s^2+R_c=1 \tag{3}$$

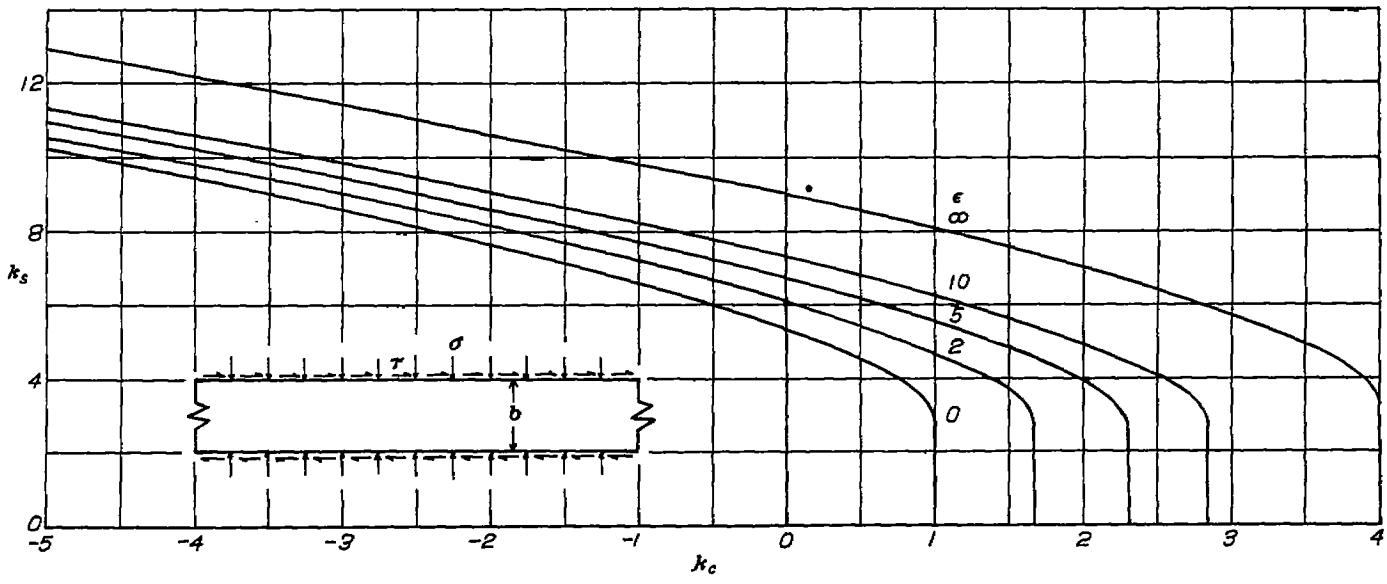

FIGURE 2.—Critical combinations of shear-stress coefficient k_s and transverse direct-stress coefficient k_c for an infinitely long plate with edges elastically restrained against rotation.

$$\sigma_{cr}=k_c\frac{\pi^2E}{12(1-\mu^2)}\left(\frac{t}{b}\right)^2$$

$$\tau_{cr}=k_s\frac{\pi^2E}{12(1-\mu^2)}\left(\frac{t}{b}\right)^2$$

The same formula was found in reference 5 to be applicable to simply supported rectangular plates of aspect ratios 0.5, 1, and 2; the conclusion was drawn that interaction curves in stress-ratio form are practically independent of the dimensions of the plate.

The present analysis, however, indicates that the buckling of an infinitely long plate loaded in shear and transverse compression (fig. 1 (a)) is not adequately represented either by equation (2) or (3) or by any formula of the type of equation (1). Two independent theoretical solutions to this buckling problem are given in appendixes B and C. Appendix B contains the exact solution of the differential equation of equilibrium, and appendix C contains an energy solution leading directly to an interaction formula. This energy solution, which gives approximate values only, was made to obtain an initial quick survey of the problem and to provide a check on the results of the exact solution. Approximate interaction formulas in substantial agreement with these results were given for the cases of simply supported and clamped edges in reference 6.

RESULTS AND DISCUSSION

In figure 2, curves are given that indicate the critical combinations of shear and transverse direct stress for an infinitely long plate with edges elastically restrained against rotation. These curves are computed from the exact solution presented in appendix B. The degree of edge restraint is denoted by ϵ, which is defined in appendix B in such a way that zero edge restraint corresponds to simply supported edges and infinite edge restraint indicates clamped edges. A similar set of curves is given in terms of stress ratios in figure 3. The numerical values used to plot figures 2 and 3, together with the values found by the energy solution, are given in table I.

The most striking feature of these results is that an appreciable fraction of the critical stress in pure shear can evidently be applied to the plate without any reduction in the compressive stress necessary to produce buckling. (See fig. 3.) This fraction varies from about one-third to more than one-half, depending on the degree of restraint. At shear stresses higher than those corresponding to this fraction, the compressive stress required to produce buckling is reduced by the presence of shear. The result that the compressive buckling stress is entirely unaffected by the presence of a considerable amount of shear is probably peculiar to infinitely long plates. It is to be expected, however, that this result will be closely approached in the case of long finite plates.

In figure 4 a comparison is made between the exact solutions and the interaction formulas of equations (2) and (3). Equation (2), which is the interaction formula in general use, is seen to be decidedly conservative.

CONCLUSIONS

The exact solution of the differential equation for the buckling of an infinitely long flat plate under combined shear and transverse direct stress with edges elastically restrained against rotation indicates the following:

1. An infinitely long flat plate may be loaded with an appreciable fraction of its critical stress in pure shear without causing any reduction in the transverse compressive stress necessary to produce buckling.

2. An interaction formula in general use for rectangular plates in combined shear and compression is decidedly conservative when applied to an infinitely long plate in shear and transverse compression.

LANGLEY MEMORIAL AERONAUTICAL LABORATORY,
NATIONAL ADVISORY COMMITTEE FOR AERONAUTICS,
LANGLEY FIELD, VA., *November 8, 1944.*

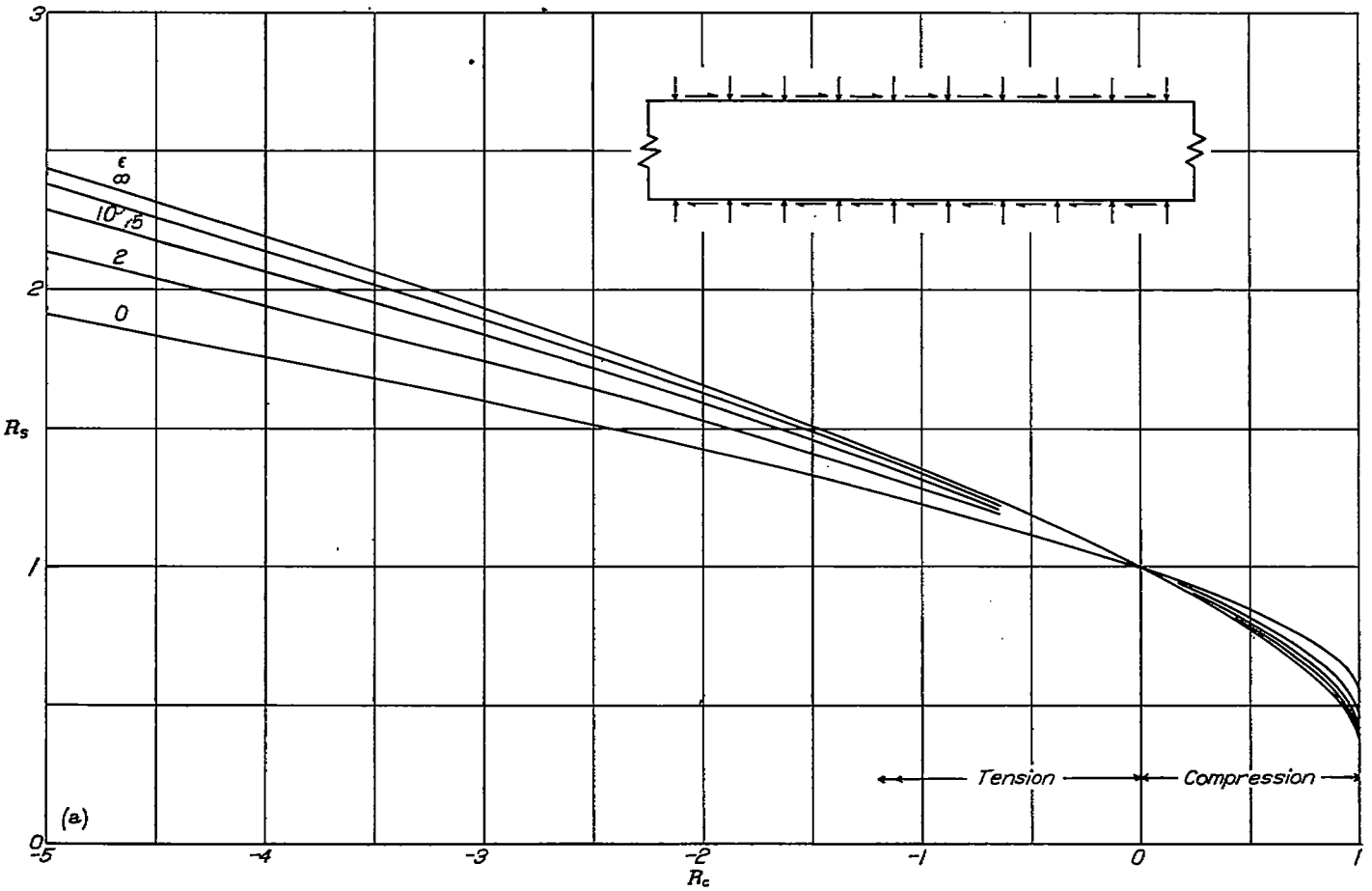

(a) Shear with tension or compression.

FIGURE 3.—Critical combinations of shear-stress ratio R_s and transverse direct-stress ratio R_c for an infinitely long plate with edges elastically restrained against rotation.

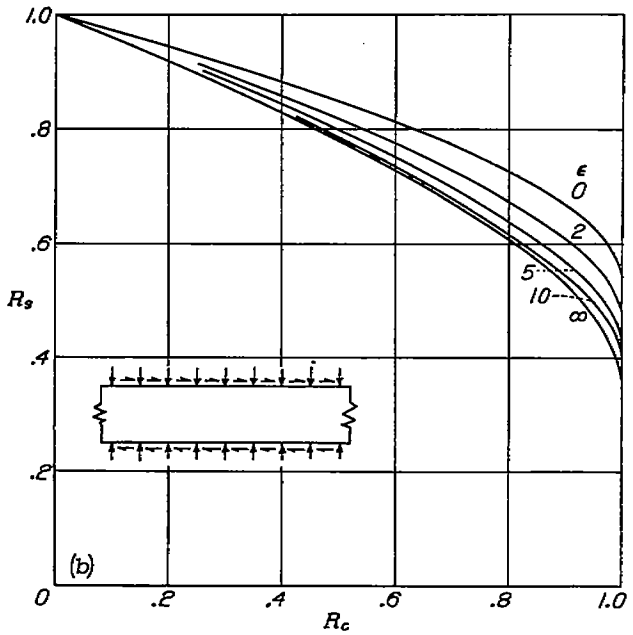

(b) Shear with compression.

FIGURE 3.—Concluded.

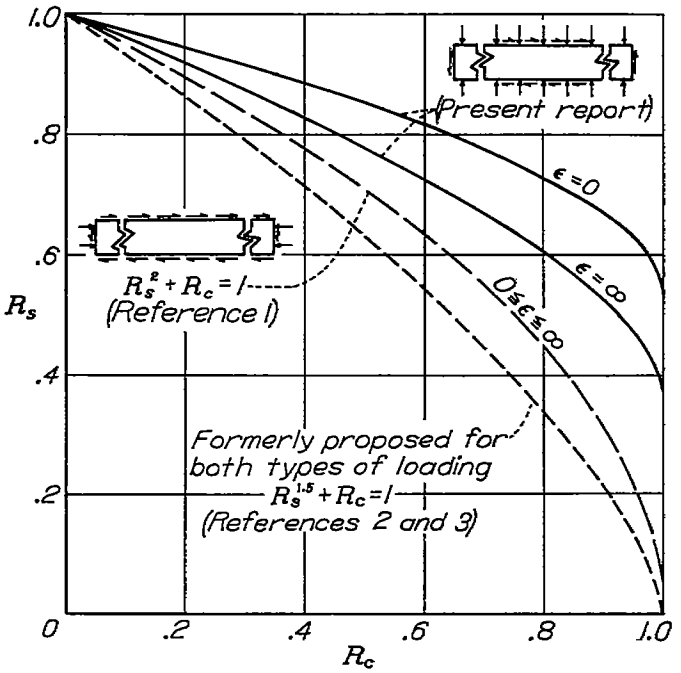

FIGURE 4.—Comparison of correct interaction curves with a curve formerly proposed for infinitely long plates under combined shear and compression.

APPENDIX A

SYMBOLS

C_1, C_2	functions of edge restraint coefficient ϵ given in appendix C
D	flexural stiffness of plate per unit length, in-lb $\left(\frac{Et^3}{12(1-\mu^2)}\right)$
E	elastic modulus of material, psi
N_x	compressive force per unit length, lb/in.
N_{xy}	shearing force per unit length of plate, lb/in.
S	rotational stiffness per inch of restraining member at edge of plate, lb/radian
T_c	work done by compressive force per half wave length, in-lb
T_s	work done by shear force per half wave length, in-lb
V_1	strain energy in plate per half wave length, in-lb
V_2	strain energy in edge restraint per half wave length, in-lb
Y	function of y associated with deflection of plate during buckling
b	width of plate, in.
b_1	width of plate in oblique coordinate system of reference 1, in.
c	function of α, β, and λ
k_c, k_s	critical compressive and shear-stress coefficients, respectively
m	root of a characteristic equation of appendix B
f_1, f_2, f_3	functions of restraint coefficient ϵ given in appendix C
t	thickness of plate, in.
$u=\frac{\pi b}{2\lambda}$	
w	displacement of buckled plate from original position
w_0	amplitude of assumed wave form of buckle
x	longitudinal coordinate of plate
y	transverse coordinate of plate
α, β	functions of λ, γ, and k_c
ϵ	nondimensional coefficient of edge restraint
γ	one of two parameters determining buckle form
λ	one of two parameters determining buckle form (half wave length of buckle, in.)
μ	Poisson's ratio
σ	direct stress
σ_y	transverse direct stress, psi
τ	shear stress, psi
ϕ	angle between buckle node and y-axis
$\theta=\tan\phi$	
R_1, R_2, R_3	stress ratios
R_s	shear-stress ratio
R_c	longitudinal direct-stress ratio
cr	critical (used as subscript)

APPENDIX B

SOLUTION BY DIFFERENTIAL EQUATION

Statement of problem.—The exact solution for the critical stress at which buckling occurs in a flat rectangular plate subjected to combined shear and compression in its own plane may be obtained by solving the differential equation that expresses the equilibrium of the buckled plate. The plate is assumed to be infinitely long, and equal elastic restraints against rotation are assumed to be present along the two edges of the plate.

Differential equation.—Figure 5 shows the coordinate system used. The differential equation for equilibrium of a flat plate under shear and transverse direct stress is (from reference 7)

$$D\left(\frac{\partial^4 w}{\partial x^4}+2\frac{\partial^4 w}{\partial x^2\partial y^2}+\frac{\partial^4 w}{\partial y^4}\right)+2\tau t\frac{\partial^2 w}{\partial x\partial y}+\sigma_y t\frac{\partial^2 w}{\partial y^2}=0 \quad \text{(B1)}$$

It is convenient to write σ_y and τ in terms of the dimensionless buckling coefficients k_c and k_s by means of the relations

$$\left.\begin{aligned}\sigma_y&=\frac{k_c\pi^2 D}{b^2 t}\\ \tau&=\frac{k_s\pi^2 D}{b^2 t}\end{aligned}\right\} \quad \text{(B2)}$$

Substitution of the expressions for σ_y and τ from equations (B2) in equation (B1) gives

$$\frac{\partial^4 w}{\partial x^4}+2\frac{\partial^4 w}{\partial x^2\partial y^2}+\frac{\partial^4 w}{\partial y^4}+\frac{2\pi^2 k_s}{b^2}\frac{\partial^2 w}{\partial x\partial y}+\frac{\pi^2 k_c}{b^2}\frac{\partial^2 w}{\partial y^2}=0 \quad \text{(B3)}$$

Solution of differential equation.—If the plate is infinitely long in the x-direction, all displacements must be periodic in x and the deflection surface may be taken in the form

$$w=Ye^{i\frac{\pi x}{\lambda}} \quad \text{(B4)}$$

where Y is a function of y only and λ is the half wave length of the buckles in the x-direction.

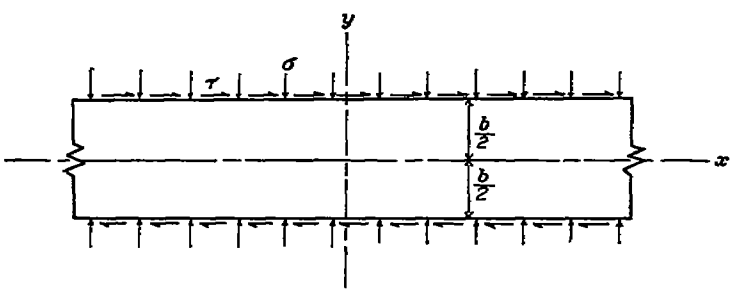

FIGURE 5.—Coordinate system used in appendix B for an infinitely long plate under combined shear and transverse compression.

Substitution of the expression for w from equation (B4) in the differential equation (B3) gives the following as the equation that determines Y:

$$\frac{d^4Y}{dy^4}+\left(\frac{\pi^2 k_c}{b^2}-\frac{2\pi^2}{\lambda^2}\right)\frac{d^2Y}{dy^2}+\frac{2\pi^3 i k_s}{b^2\lambda}\frac{dY}{dy}+\frac{\pi^4}{\lambda^4}Y=0 \quad \text{(B5)}$$

A solution of equation (B5) is

$$Y=e^{im\frac{y}{b}}$$

where m is a root of the characteristic equation

$$m^4+\left[2\left(\frac{\pi b}{\lambda}\right)^2-\pi^2 k_c\right]m^2-2\pi^2\left(\frac{\pi b}{\lambda}\right)k_s m+\left(\frac{\pi b}{\lambda}\right)^4=0 \quad \text{(B6)}$$

Except for the substitution of $2\left(\frac{\pi b}{\lambda}\right)^2-\pi^2 k_c$ for $2\left(\frac{\pi b}{\lambda}\right)^2$, equation (B6) is identical with equation (A–6) of appendix A of reference 8, in which equation (B3) of this appendix was solved with $k_c=0$. With this change, all the results obtained in appendix A of reference 8 are applicable here. The stability criterion for combined compression and shear is therefore the same in form as that for shear alone, given by equation (A–19) of reference 8, which is

$$\begin{aligned}&2\alpha\beta\left(4\gamma^2-\frac{\epsilon^2}{4}\right)(\cosh 2\alpha\cos 2\beta-\cos 4\gamma)-\Big[4\gamma^2(\beta^2-\alpha^2)\\&\quad-(\beta^2+\alpha^2)^2-(4\gamma^2-\beta^2+\alpha^2)\frac{\epsilon^2}{4}\Big]\sinh 2\alpha\sin 2\beta\\&\quad+\epsilon[\alpha(4\gamma^2+\alpha^2+\beta^2)\cosh 2\alpha\sin 2\beta\\&\quad+\beta(4\gamma^2-\alpha^2-\beta^2)\sinh 2\alpha\cos 2\beta-4\alpha\beta\gamma\sin 4\gamma]=0 \quad \text{(B7}\end{aligned}$$

The relation between k_s and α, β, and γ is also the same in form as that in equation (A–23) of reference 8, namely,

$$k_s=\frac{8\gamma(\alpha^2+\beta^2)}{\pi^2\frac{\pi b}{\lambda}} \quad \text{(B8)}$$

In the present report, however, α and β have the following values:

$$\left.\begin{aligned}\alpha&=\sqrt{c+\sqrt{(\gamma^2+c)^2-\frac{1}{16}\left(\frac{\pi b}{\lambda}\right)^4}}\\ \beta&=\sqrt{-c+\sqrt{(\gamma^2+c)^2-\frac{1}{16}\left(\frac{\pi b}{\lambda}\right)^4}}\end{aligned}\right\} \quad \text{(B9)}$$

where

$$c=\gamma^2+\frac{1}{4}\left(\frac{\pi b}{\lambda}\right)^2-\frac{\pi^2}{8}k_c$$

As in reference 8, the restraint coefficient ϵ is defined herein by the relation

$$\epsilon=\frac{Sb}{D}$$

where S is the ratio of a sinusoidally applied moment to the resulting sinusoidally distributed rotation of the restraining element measured in radians.

Evaluation of k_s corresponding to a selected value of k_c.—The procedure for evaluating k_s, after values of k_c and ϵ have been chosen, is as follows: A value of b/λ is selected; a series of values of γ are assumed until one is found that, together with the corresponding values of α and β computed from equation (B9), satisfies equation (B7); k_s is then computed from equation (B8). Another value of b/λ is selected; a new set of values of γ, α, and β is found that satisfies the stability criterion; and a new value of k_s is computed. The entire process is repeated until the minimum value of k_s can be found from a plot of k_s against b/λ. When ϵ is a function of b/λ, ϵ must be reevaluated each time a different value of b/λ is selected. The minimum value of k_s and the chosen value of k_c, when inserted in equations (B2), give a critical combination of shear and direct stress.

Evaluation of k_s when k_c has value corresponding to buckling as Euler strip.—One critical combination of shear and compression is simply $k_s=0$ and k_c equals the value corresponding to buckling as an Euler strip. The curves giving critical stress combinations, however, did not appear to be approaching this point as their construction progressed. It was therefore necessary to determine whether values of k_s other than zero are critical when the Euler compressive stress is reached. The determination of k_s when k_c reaches the value at which the plate buckles as an Euler strip requires special treatment, because k_s, given by equation (B8), becomes indeterminate when the wave length becomes infinite as suggested by the energy solution. The result that λ becomes infinite when k_c takes its Euler value is readily checked from equation (C11) for the special case of $\epsilon=0$; for this case $p=q=r=\frac{1}{2}$ and $(k_c)_{cr}=1$. From equation (B8) it is clear that, if k_s is to remain finite when the wave length approaches infinity, either $\gamma\rightarrow 0$, case (a), or $\alpha^2+\beta^2\rightarrow 0$, case (b).

For case (a), when $\epsilon=0$, it follows from equations (B9) that, to small quantities of the second order,

$$\left.\begin{aligned}\alpha&=i\left[\frac{\pi}{2}-\frac{1}{\pi}(3\gamma^2+2u^2)\right]\\ \beta&=\gamma\end{aligned}\right\}\tag{B10}$$

where

$$u=\frac{\pi b}{2\lambda}$$

If the values of α and β from equations (B10) are substituted in equation (B7) and the resulting equation is expanded, with only the lowest powers of u and γ retained,

$$\gamma^2=\frac{4\pi^2u^2}{64-6\pi^2}\tag{B11}$$

Substitution of the values of α and β from equations (B10) and (B11) in equation (B8) gives as the final result for $\epsilon=0$

$$k_s=\pm\frac{2\pi}{\sqrt{64-6\pi^2}}$$

Case (b) can be analyzed by a similar method, but the analysis is quite complicated because terms of third order must be retained. For $\epsilon=0$ and $\epsilon=\infty$, case (a) and case (b) were found to lead to exactly the same result for k_s. A value of k_s other than zero when k_c takes its Euler value may be found in the same manner for other values of edge restraint. For any value of the restraint coefficient ϵ,

$$k_s^2=\frac{k_c^2\left[\left(\epsilon\pi\sqrt{k_c}+2\pi\sqrt{k_c}+\frac{2\epsilon}{\pi\sqrt{k_c}}\right)\sin\pi\sqrt{k_c}+\left(\frac{\pi^2}{2}-2\epsilon-\frac{\epsilon^2}{2}\right)\cos\pi\sqrt{k_c}-\frac{\epsilon^2}{\pi^2k_c}(\cos\pi\sqrt{k_c}-1)\right]}{\left(-\frac{\pi^3}{12}k_c\sqrt{k_c}-6\pi\sqrt{k_c}-2\epsilon\pi\sqrt{k_c}+\frac{\epsilon^2}{12}\pi\sqrt{k_c}+\frac{3\epsilon^2}{2\pi}\sqrt{k_c}\right)\sin\pi\sqrt{k_c}+\left(-\frac{3\pi^2}{4}k_c+\frac{\epsilon\pi^2k_c}{6}-\frac{3}{4}\epsilon^2\right)\cos\pi\sqrt{k_c}+\left(4+8\epsilon+2\epsilon^2+\frac{3\epsilon^2}{2\pi^2k_c}\right)(\cos\pi\sqrt{k_c}-1)}\tag{B12}$$

where k_c has the value corresponding to Euler strip buckling, at this value of ϵ. The relationship between this Euler value of k_c and the corresponding ϵ is given by the equation (from reference 9)

$$\epsilon=\frac{-\pi\sqrt{k_c}}{\tan\frac{\pi\sqrt{k_c}}{2}}$$

When k_c reaches the Euler value, the critical shear-stress coefficient k_s can therefore be either 0 or the value given by equation (B12). The conclusion that k_s can also have any value between these limits is plausible on the basis of the following physical considerations. The shear stress does no work during buckling when the stress condition is such that the plate buckles with an infinite wave length. The effect of shear, furthermore, is to reduce the wave length to a value of the order of the width of the plate. The wave length at the time buckling occurs is infinite, however, when the plate is either in pure compression or at the value of k_s satisfying equation (B12). This fact means that, for values of k_s between 0 and that given by equation (B12), the shear stress is not great enough to force buckling in short waves and therefore does not assist in producing buckles. In this range of shear stress the compressive stress necessary to produce buckling is, consequently, the Euler stress.

APPENDIX C

SOLUTION BY ENERGY METHOD FOR EDGE RESTRAINT INDEPENDENT OF WAVE LENGTH

The critical stress is determined on the basis of the principle that the elastic-strain energy stored in a structure during buckling is equal to the work done by the applied loads during buckling. If the structure under consideration is an infinitely long plate under combined shear and edge compression with edges elastically restrained against rotation, this equality may be written

$$T_c+T_s=V_1+V_2 \tag{C1}$$

In reference 1 an energy solution was given for the type of loading shown in figure 1 (b). The deflection function used in reference 1 is also suitable for application to the solution of the type of loading shown in figure 1 (a), which is the loading considered in the present paper. The values for T_s, V_1, and V_2 may accordingly be taken directly from reference 1, but T_c must be recomputed to apply to the case of transverse compressive stress.

The following substitutions are used to transform the energy expressions from the oblique coordinates of reference 1, the left-hand terms of the equations, to the rectangular coordinates (fig. 6) used in the present paper, the right-hand terms of the equations:

$$\left.\begin{aligned}\frac{y}{b_1}&=\frac{y}{b}\\ b_1\cos\phi&=b\end{aligned}\right\} \tag{C2}$$

For brevity the following notation is also adopted

$$\tan\phi=\theta$$

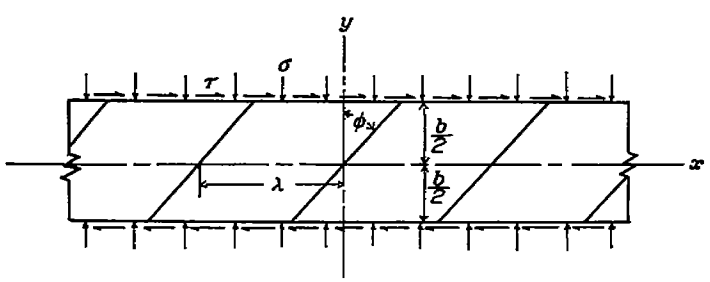

FIGURE 6.—Coordinate system used and wave form assumed for energy solution in appendix C; inclined lines indicate nodal lines of buckles.

By use of equations (C2), the expressions from reference 1 that are used in the present paper may be rewritten as follows:

$$T_s=w_0^2\frac{N_{xy}\pi^2b\theta}{2\lambda}f_1 \tag{C3}$$

$$V_1=w_0^2\frac{\pi^4D}{4b\lambda}\left[\left(\frac{b}{\lambda}\right)^2(1+\theta^2)^2f_1+2(1+3\theta^2)f_2+\left(\frac{\lambda}{b}\right)^2f_3\right] \tag{C4}$$

$$V_2=w_0^2\frac{\pi^2D\lambda\epsilon}{2b^3} \tag{C5}$$

where

$$f_1=\left(\frac{\pi^2}{120}+\frac{1}{8}-\frac{2}{\pi^3}\right)\epsilon^2+\left(\frac{1}{2}-\frac{4}{\pi^2}\right)\epsilon+\frac{1}{2}$$

$$f_2=\left(\frac{5}{24}-\frac{2}{\pi^2}\right)\epsilon^2+\left(\frac{1}{2}-\frac{4}{\pi^2}\right)\epsilon+\frac{1}{2}$$

$$f_3=\left(\frac{1}{8}-\frac{1}{\pi^2}\right)\epsilon^2+\left(\frac{1}{2}-\frac{4}{\pi^2}\right)\epsilon+\frac{1}{2}$$

and ϵ is the restraint coefficient defined in appendix B.

The work done by the compressive force per half wave length may be written

$$T_c=\frac{1}{2}N_y\int_{-\frac{b}{2}}^{\frac{b}{2}}\int_{-\frac{\lambda}{2}}^{\frac{\lambda}{2}}\left(\frac{\partial w}{\partial y}\right)^2dx\,dy \tag{C6}$$

As in reference 1, the assumed deflection function is

$$w=w_0\left[\frac{\pi\epsilon}{2}\left(\frac{y^2}{b^2}-\frac{1}{4}\right)+\left(1+\frac{\epsilon}{2}\right)\cos\frac{\pi y}{b}\right]\cos\frac{\pi}{\lambda}(x+\theta y) \tag{C7}$$

When the expression for w from equation (C7) is substituted in equation (C6) and the indicated operations are performed,

$$T_c=w_0^2\frac{N_y\pi^2b}{4\lambda}\left(\frac{\lambda^2}{b^2}f_2+\theta^2f_1\right) \tag{C8}$$

Values from equations (C3), (C4), (C5), and (C8) are now substituted in the buckling equation (C1). The use of the equations

$$N_{xy}=k_s\frac{\pi^2D}{b^2}$$

$$N_y=k_c\frac{\pi^2D}{b^2}$$

eliminates N_{xy} and N_y. The resulting equation gives the critical combination of stresses and may be written as

$$k_s=\frac{1}{2f_1\theta}\left[\frac{b^2}{\lambda^2}(1+\theta^2)^2f_1+\frac{\lambda^2}{b^2}f_3+2(1+3\theta^2)f_2+\frac{2\epsilon}{\pi^2}\frac{\lambda^2}{b^2}-k_c\left(\frac{\lambda^2}{b^2}f_2+\theta^2f_1\right)\right] \tag{C9}$$

This equation shows that, for a selected value of k_c, the critical shear stress depends upon the wave length and the angle of the buckle. Since a structure buckles at the lowest stress at which instability can occur, k_s is minimized with respect to wave length and angle of buckle. The minimum value of k_s with respect to value of wave length is determined from the condition

$$\frac{\partial k_s}{\partial\lambda}=0 \tag{C10}$$

842951—49——16

which gives (when ϵ does not depend on wave length)

$$\left(\frac{\lambda}{b}\right)^2=\frac{(1+\theta^2)\sqrt{f_1}}{\sqrt{f_3+\frac{2\epsilon}{\pi^2}-k_cf_2}} \tag{C11}$$

Substitution of this value of wave length in equation (C9) gives

$$k_s=\frac{1+\theta^2}{f_1\theta}\left\{f_1\left[\left(\frac{2\epsilon}{\pi^2}+f_3\right)-k_cf_2\right]\right\}^{1/2}+\frac{1}{2f_1\theta}\left[2(1+3\theta^2)f_2-k_c\theta^2f_1\right] \tag{C12}$$

The minimum value of k_s with respect to angle of buckle is found from the condition

$$\frac{\partial k_s}{\partial\theta}=0 \tag{C13}$$

which gives

$$\theta^2=\frac{\left[f_1\left(\frac{2\epsilon}{\pi^2}+f_3\right)-k_cf_2\right]^{1/2}+f_2}{\left[f_1\left(\frac{2\epsilon}{\pi^2}+f_3\right)-k_cf_2\right]^{1/2}+3f_2-\frac{k_cf_1}{2}} \tag{C14}$$

If this value of θ is substituted in equation (C12), the final result is the following interaction formula, in which k_s is given in terms of k_c and the edge restraint ϵ:

$$k_s^2=4C_1+3C_2\,(C_2-k_c)+(4C_2-k_c)\sqrt{2(2C_1-C_2k_c)} \tag{C15}$$

where

$$C_1=\frac{f_3+\frac{2\epsilon}{\pi^2}}{f_1}$$

$$=\frac{\left(\frac{1}{8}-\frac{1}{\pi^2}\right)\epsilon^2+\left(\frac{1}{2}-\frac{2}{\pi^2}\right)\epsilon+\frac{1}{2}}{\left(\frac{\pi^2}{120}+\frac{1}{8}-\frac{2}{\pi^2}\right)\epsilon^2+\left(\frac{1}{2}-\frac{4}{\pi^2}\right)\epsilon+\frac{1}{2}}$$

and

$$C_2=\frac{2f_2}{f_1}$$

$$=2\frac{\left(\frac{5}{24}-\frac{2}{\pi^2}\right)\epsilon^2+\left(\frac{1}{2}-\frac{4}{\pi^2}\right)\epsilon+\frac{1}{2}}{\left(\frac{\pi^2}{120}+\frac{1}{8}-\frac{2}{\pi^2}\right)\epsilon^2+\left(\frac{1}{2}-\frac{4}{\pi^2}\right)\epsilon+\frac{1}{2}}$$

REFERENCES

1. Stowell, Elbridge Z., and Schwartz, Edward B.: Critical Stress for an Infinitely Long Flat Plate with Elastically Restrained Edges under Combined Shear and Direct Stress. NACA ARR No. 3K13, 1943.
2. Shanley, F. R., and Ryder, E. I.: Stress Ratios. The Answer to the Combined Loading Problem. Aviation, vol. 36, no. 6, June 1937, pp. 28, 29, 43, 66–70.
3. Anon.: Strength of Aircraft Elements. ANC–5, Army-Navy-Civil Committee on Aircraft Design Criteria. Revised ed., Dec. 1942.
4. Crate, Harold, Batdorf, S. B., and Baab, George W.: The Effect of Internal Pressure on the Buckling Stress of Thin-Walled Circular Cylinders under Torsion. NACA ARR No. L4E27, 1944.
5. Hopkins, H. G., and Rao, B. V. S. C.: The Initial Buckling of Flat Rectangular Panels under Combined Shear and Compression. R. & M. No. 1965, British A.R.C., 1943.
6. Wagner, Herbert: Über Konstruktions- und Berechnungsfragen des Blechbaues. Jahrb. WGL, 1928, R. Oldenbourg (München und Berlin), pp. 113–125.
7. Timoshenko, S.: Theory of Elastic Stability. McGraw-Hill Book Co., Inc., 1936, p. 305.
8. Stowell, Elbridge Z.: Critical Shear Stress of an Infinitely Long Flat Plate with Equal Elastic Restraints against Rotation along the Parallel Edges. NACA ARR No. 3K12, 1943.
9. Lundquist, Eugene E., Rossman, Carl A., and Houbolt, John C.: A Method for Determining the Column Curve from Tests of Columns with Equal Restraints against Rotation on the Ends. NACA TN No. 903, 1943.

TABLE I.—VALUES OF k_c AND R_c WITH CORRESPONDING COMPUTED VALUES OF k_s AND R_s

k_s	k_c		R_s	R_c
	Exact	Energy		Exact
$\epsilon=0$				
1.00	0	0	1.00	0
	2.86	3.16		.535
.99	3.09	3.39	.99	.578
.95	3.36	3.67	.95	.629
.90	3.57	3.88	.90	.669
.80	3.87	4.20	.80	.725
.60	4.35	4.66	.60	.814
.40	4.70	5.04	.40	.881
.30	4.88	5.20	.30	.913
.20	5.03	5.36	.20	.942
.10	5.19	5.51	.10	.972
0	5.34	5.66	0	1.000
−1.00	6.56	6.89	−1.00	1.229
−2.00	7.63	7.91	−2.00	1.428
−5.00	10.22	10.47	−5.00	1.914
$\epsilon=2$				
1.67	0	0	1.00	0
	2.77	2.96		.457
1.33	4.07	4.32	.80	.672
.67	5.20	5.44	.40	.858
0	6.06	6.30	0	1.000
−3.34	9.26	9.50	−2.00	1.527
−8.34	12.95	13.16	−5.00	2.137
$\epsilon=5$				
2.30	0	0	1.00	0
	2.76	3.03		.413
1.84	4.27	4.43	.80	.639
.92	5.62	5.81	.40	.841
0	6.68	6.88	0	1.000
−4.59	10.67	10.88	−2.00	1.597
−11.49	15.28	15.52	−5.00	2.287
$\epsilon=10$				
2.85	0	0	1.00	0
	2.78	3.18		.382
2.28	4.49	4.60	.80	.618
1.14	6.04	6.19	.40	.831
0	7.27	7.43	0	1.000
−5.71	11.87	12.13	−2.00	1.633
−14.27	17.29	17.60	−5.00	2.378
$\epsilon=\infty$				
4.00	0	0	1.00	0
	3.27	3.81		.364
3.80	4.27	4.34	.95	.476
3.60	4.73	4.76	.90	.527
3.20	5.42	5.45	.80	.604
2.40	6.52	6.57	.60	.726
1.60	7.42	7.52	.40	.826
.80	8.24	8.37	.20	.917
0	8.98	9.15	0	1.000
−4.00	12.21	12.52	−1.00	1.360
−8.00	14.95	15.39	−2.00	1.665
−20.00	21.90	22.67	−5.00	2.439