REPORT No. 848

THE LAGRANGIAN MULTIPLIER METHOD OF FINDING UPPER AND LOWER LIMITS TO CRITICAL STRESSES OF CLAMPED PLATES

By Bernard Budiansky and Pai C. Hu

SUMMARY

The theory of Lagrangian multipliers is applied to the problem of finding both upper and lower limits to the true compressive buckling stress of a clamped rectangular plate. The upper and lower limits thus bracket the true stress, which cannot be exactly found by the differential-equation approach. The procedure for obtaining the upper limit, which is believed to be new, presents certain advantages over the classical Rayleigh-Ritz method of finding upper limits. The theory of the lower-limit procedure has been given by Trefftz but, in the present application, the method differs from that of Trefftz in a way that makes it inherently more quickly convergent. It is expected that in other buckling problems and in some vibration problems the Lagrangian multiplier method of finding upper and lower limits may be advantageously applied to the calculation of buckling stresses and natural frequencies.

INTRODUCTION

Many important problems that cannot be exactly solved by the differential-equation approach and must therefore be analyzed by approximate methods arise in the buckling and vibrations of thin plates. The theory of Lagrangian multipliers can be a powerful tool in the analysis of many of these problems. The present paper presents the details of application as well as the fundamental principles of the Lagrangian multiplier method by demonstrating the use of the method to obtain both upper and lower limits to the true compressive buckling stress of a rectangular plate clamped along all edges.

The procedure for obtaining the lower limit is similar to a method used by Trefftz (reference 1) and recently described by Reissner (reference 2). The present lower-limit method differs from that of Trefftz, however, in a way that makes it inherently more quickly convergent. The upper-limit procedure, which does not appear to have been presented previously, is simpler than the usual Rayleigh-Ritz method and may be expected to permit the computation of more accurate results with less labor.

In a recent treatment of the problem of compressive buckling of clamped plates, extensive calculations of lower limits were made by Levy (reference 3) by means of a procedure equivalent to the Trefftz method. The results were estimated by Levy to be within 0.1 percent of the true results. In order to illustrate the methods of the present paper, upper and lower limits to the buckling stress of a square plate are computed to within 0.1 percent of each other; a positive check on the accuracy of Levy's results is thus obtained.

SYMBOLS

a	length of plate, in direction of stress
b	width of plate, perpendicular to stress
β	aspect ratio (a/b)
t	thickness
μ	Poisson's ratio
E	Young's modulus of elasticity
D	plate stiffness in bending $\left(\frac{Et^3}{12(1-\mu^2)}\right)$
x	plate coordinate in direction of stress
y	plate coordinate, perpendicular to direction of stress
w	plate buckling deformation, normal to plane of the plate
σ_x	critical compressive stress, in x-direction
k	critical compressive stress coefficient in the formula $\sigma_x=k\left(\frac{\pi^2 D}{b^2 t}\right)$
V	internal energy of deformation
T	external work of applied stress
a_n	Fourier coefficient of $\cos\frac{n\pi y}{a}$
b_r	Fourier coefficient of $\cos\frac{r\pi y}{a}$
a_{mn}	Fourier coefficient of $\cos\frac{m\pi y}{a}\cos\frac{n\pi y}{b}$
i,j,m,n,p,q	even integers
r, s	odd integers
δ_{mn}	Kronecker delta (1 if $m=n$; 0 if $m\neq n$)

$$A_{mn}=\frac{1}{[(m^2+n^2\beta^2)^2-km^2\beta^2](1+\delta_{m0}+\delta_{0n})}$$

$\alpha, \lambda, \lambda_j, \mu_i, \gamma$	Lagrangian multipliers

THEORETICAL BACKGROUND

Rayleigh-Ritz method.—The Rayleigh-Ritz energy method for determining the critical stress of a thin plate consists of the following steps:

(1) The deflection surface of the buckled plate is expressed in expanded form as the sum of an infinite set of functions

having undetermined coefficients. In general, each term of the expansion must satisfy the geometrical boundary conditions of the problem.

(2) The energy of the load-plate system is computed for this deflection surface and is then minimized with respect to the undetermined coefficients.

(3) This minimizing procedure leads to a set of linear homogeneous equations in the undetermined coefficients. These equations have nonvanishing solutions only if the determinant of their coefficients vanishes. The vanishing of this stability determinant provides the equation that may be solved for the buckling stress.

When the set of functions used is a complete set capable of representing the deflection, slope, and curvature of any possible plate deformation, the solution obtained is, in principle, exact. Since, however, the exact stability determinant is usually infinite, a finite determinant yielding approximate results is used instead.

Lagrangian multiplier method.—The Lagrangian multiplier method follows the general procedure outlined for the Rayleigh-Ritz method, with but one outstanding change. The restriction in step (1) that the boundary conditions be satisfied by every term of the expansion is discarded and is replaced by the condition that the expansion as a whole satisfy the boundary conditions. This condition is mathematically satisfied in step (2), during the minimization process, by the use of Lagrangian multipliers.

The fundamental advantage of the Lagrangian multiplier method lies in the fact that, with the rejection of the necessity of the fulfillment of boundary conditions term by term, the choice of an expansion is much less restricted. In the clamped-plate compression problem, a simple Fourier expansion may be used instead of the complicated functions assumed in the Rayleigh-Ritz analyses of this problem (references 4 and 5). Furthermore, the orthogonality properties of the simple Fourier expansion lead to energy expressions of a simplicity that is instrumental in permitting accurate computations.

Approximate solutions: upper and lower limits.—The Lagrangian multiplier method, as well as the Rayleigh-Ritz method, gives a theoretically exact solution for the buckling stress; but ordinarily only approximate results are obtained because of the practical necessity of considering finite rather than infinite determinants. In the Rayleigh-Ritz method the approximate result is always higher than the true buckling stress. In the Lagrangian multiplier method, however, it is possible to obtain approximate solutions in two different ways, which permit the computation of a lower limit as well as an upper limit to the true buckling stress. As determinants of higher order are used to obtain approximations of higher order, both the upper-limit and lower-limit results approach the true buckling stress. Thus, the Lagrangian multiplier method can be used to provide a result to within any specified degree of accuracy. It may be expected, furthermore, that a particular determinant in the Lagrangian multiplier method ought to yield a more accurate result than a determinant of equal order in the Rayleigh-Ritz method.

LAGRANGIAN MULTIPLIERS

The procedure used in applying the fundamental mathematical principles of Lagrangian multipliers is described in this section; a general proof of the validity of the method is given in the appendix.

Let it be required to minimize a function of N variables

$$f(x_1, x_2, x_3, \ldots x_N) \tag{1}$$

where the x's are not independent but are bound together by the relationship

$$\varphi(x_1, x_2, x_3, \ldots x_N)=0 \tag{2}$$

Lagrange's method of simultaneously minimizing f and satisfying the constraining relationship (2) is to minimize the function

$$f-\lambda\varphi$$

with respect to the x's. The quantity λ is the undetermined Lagrangian multiplier. The necessary conditions for minimizing f then become

$$\frac{\partial f}{\partial x_K}-\lambda\frac{\partial \varphi}{\partial x_K}=0 \qquad (K=1, 2, 3, \ldots N)$$
$$\varphi=0 \tag{2}$$

Note that these expressions are $N+1$ equations in the $N+1$ unknowns $x_1, x_2, \ldots x_N$ and λ.

If there are two relationships that constrain the x's; that is, if

$$\varphi_1(x_1, x_2, \ldots x_N)=0$$
$$\varphi_2(x_1, x_2, \ldots x_N)=0$$

two Lagrangian multipliers are then needed. The function to be minimized becomes

$$f-\lambda_1\varphi_1-\lambda_2\varphi_2$$

and the minimizing equations are

$$\frac{\partial f}{\partial x_K}-\lambda_1\frac{\partial \varphi_1}{\partial x_K}-\lambda_2\frac{\partial \varphi_2}{\partial x_K}=0 \qquad (K=1, 2, 3, \ldots N)$$
$$\varphi_1=0$$
$$\varphi_2=0$$

The method is easily extended to cover the case of any number of constraining relationships.

PRELIMINARY ILLUSTRATIVE EXAMPLE

Before the main example is given, a simpler buckling problem will be analyzed by the Lagrangian multiplier method in order that the method of application of Lagrangian multipliers may be most clearly presented without the obscuring details of analysis of more complicated problems. This elementary problem requires the use of but a single Lagrangian multiplier, which leads to a single stability equation.

Consider a square plate, clamped along two opposite edges, simply supported along the other two edges, which is loaded in compression on the simply supported edges. (See sketch.) From the exact solution of this problem, the deflection surface of the plate is known to be sinusoidal in the x-direction. The deflection in the y-direction, known to be symmetrical, must satisfy the clamped-edge boundary conditions; that is, zero deflection

$$w(x,0)=w(x,a)=0 \tag{3}$$

and zero slope

$$\frac{\partial w}{\partial y}(x,0)=\frac{\partial w}{\partial y}(x,a)=0 \tag{4}$$

The present method uses a cosine-series expansion, whereas the Trefftz procedure would use a sine-series expansion. The problem is solved by both methods for comparison.

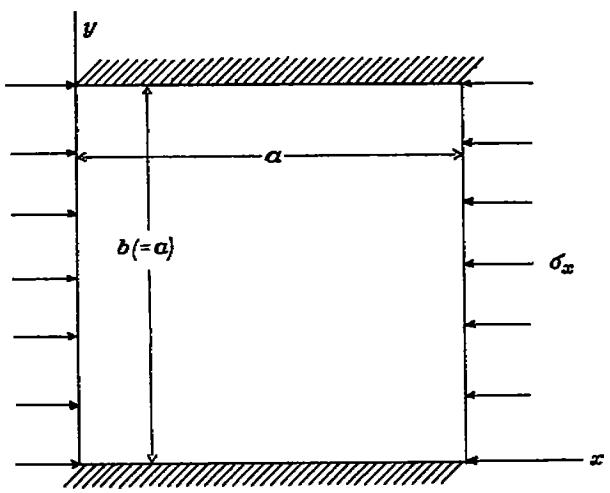

Cosine-series solution.—In the cosine-series solution the expansion

$$w=\sin\frac{m\pi x}{a}\sum_{n=0,2,4}^{\infty}a_n\cos\frac{n\pi y}{a} \tag{5}$$

may represent the deflection surface having m half-waves in the x-direction, since the Fourier series of even cosines is a complete symmetrical set.

The boundary conditions (equation (4)) on the slope are satisfied by each term of the expansion; however, in order that w satisfy the conditions of equation (3) on the edge deflection, it is necessary that

$$\sum_{n=0,2,4}^{\infty}a_n=0 \tag{6}$$

Equation (6) is a constraining relationship on the a's and as such will be introduced in Lagrange's minimization process.

As in the Rayleigh-Ritz method, the internal energy of deformation and the external work of the stresses are then calculated. Using the value for w as given by equation (5) in the general formulas (reference 6, equations (199) and (201) (modified))

$$V=\frac{D}{2}\int_0^a\int_0^b\left\{\left(\frac{\partial^2 w}{\partial x^2}+\frac{\partial^2 w}{\partial y^2}\right)^2 -2(1-\mu)\left[\frac{\partial^2 w}{\partial x^2}\frac{\partial^2 w}{\partial y^2}-\left(\frac{\partial^2 w}{\partial x\,\partial y}\right)^2\right]\right\}dy\,dx \tag{7}$$

$$T=\frac{\sigma_x t}{2}\int_0^a\int_0^b\left(\frac{\partial w}{\partial x}\right)^2 dy\,dx \tag{8}$$

gives

$$V=\frac{\pi^4 D}{8a^2}\sum_{n=0,2,4}^{\infty}(m^2+n^2)^2(1+\delta_{0n})a_n^2$$

$$T=\frac{m^2\pi^2\sigma_x t}{8}\sum_{n=0,2,4}^{\infty}(1+\delta_{0n})a_n^2$$

The usual Rayleigh-Ritz procedure requires that the expression

$$V-T \tag{9}$$

be a minimum with respect to the a's. In the present example, however, the a's are not independent but are bound by equation (6). Hence, mathematically stated, the expression $V-T$ must be a minimum, subject to the constraint relationship on the a's

$$\sum_{n=0,2,4}^{\infty}a_n=0 \tag{6}$$

Solving this minimization problem by Lagrange's method makes it necessary to minimize

$$(V-T)-\lambda\sum_{n=0,2,4}^{\infty}a_n \tag{10}$$

with respect to the a's. The necessary conditions for a minimum then become

$$\frac{\partial(V-T)}{\partial a_j}-\lambda\frac{\partial\left(\sum_{n=0,2,4}^{\infty}a_n\right)}{\partial a_j}=0 \quad (j=0,2,4,\ldots)$$

$$\sum_{n=0,2,4}^{\infty}a_n=0$$

or, upon differentiation and simplification,

$$(1+\delta_{0j})[(m^2+j^2)^2-m^2k]\,a_j-\frac{4a^2}{\pi^4 D}\lambda=0 \quad (j=0,2,4,\ldots) \tag{11}$$

$$\sum_{n=0,2,4}^{\infty}a_n=0 \tag{6}$$

Solving equation (11) for a_j and substituting into equation (6) gives the stability equation that determines k:

$$\sum_{j=0,2,4}^{\infty} \frac{1}{[(m^2+j^2)^2-m^2k](1+\delta_{0j})}=0 \tag{12}$$

For a particular number of half waves m, this equation may be solved by evaluating the series for several trial values of k and interpolating to find the k that makes the series vanish. The correct value of m is that which gives the lowest value of k. For two half waves ($m=2$) in the loaded direction, the theoretically exact value of $k=7.69$ (reference 6, p. 345) is obtained when only 10 terms of equation (12) are computed.

Sine-series solution (Trefftz method).—The same problem will be treated in the manner suggested by Reissner (reference 2), which is similar to Trefftz's method (reference 1).

Let

$$w=\sin\frac{m\pi x}{a}\sum_{r=1,3,5}^{\infty} b_r \sin\frac{r\pi y}{a} \tag{13}$$

The boundary conditions on deflection (equation (3)) are now satisfied term by term, but the conditions on the edge slopes (equation (4)) are satisfied only by making

$$\sum_{r=1,3,5}^{\infty} rb_r=0 \tag{14}$$

Now, the expression $V-T$ is computed from formulas (7) and (8) by using the value of w given by equation (13); then, by application of Lagrange's procedure,

$$(V-T)-\gamma\sum_{r=1,3,5}^{\infty} rb_r \tag{15}$$

must be minimized with respect to b_s where $s=1, 3, 5, \ldots$. The Lagrangian multiplier is γ.

The minimization equations are

$$[(m^2+s^2)^2-m^2k]b_s-\frac{4a^2}{\pi^2 D}\gamma s=0 \quad (s=1,3,5,\ldots) \tag{16}$$

$$\sum_{r=1,3,5}^{\infty} rb_r=0 \tag{14}$$

Solving equation (16) for b_s and substituting in equation (14) gives as the stability equation

$$\sum_{s=1,3,5}^{\infty} \frac{s^2}{(m^2+s^2)^2-m^2k}=0 \tag{17}$$

Comparison and discussion of results.—The series in equation (17) converges approximately as $1/s^2$, whereas the series in equation (12) converges approximately as $1/j^4$. Because of the more rapid convergence obtained in the stability equation, the Lagrangian multiplier method is preferably used to satisfy the zero-deflection condition rather than the zero-slope condition. Slope is the derivative of deflection, and, in general, differentiation of a Fourier series makes it more slowly convergent.

THE COMPRESSIVE BUCKLING OF A RECTANGULAR PLATE CLAMPED ALONG ALL EDGES

The previous elementary example required only a simple Fourier expansion and but one Lagrangian multiplier to satisfy the boundary conditions. The more difficult problem of finding the buckling stress of the rectangular plate clamped on all edges and loaded as shown in the accompanying sketch necessitates a double Fourier series, as well as an infinite set of Lagrangian multipliers to satisfy the boundary conditions.

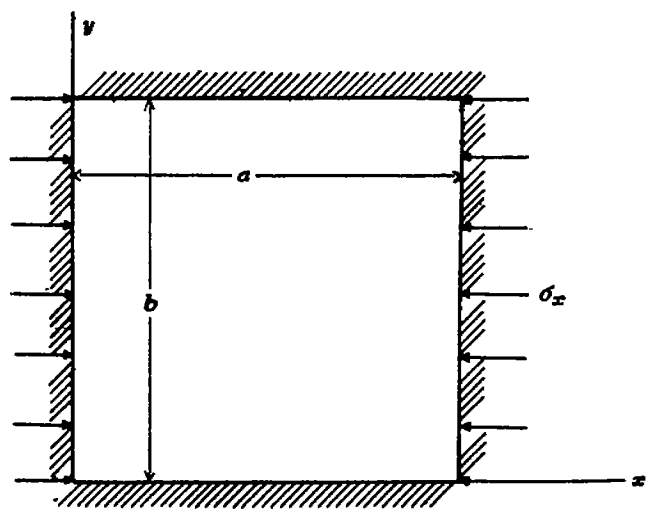

Boundary conditions.—The boundary conditions of the problem are:

Zero deflection, loaded edges

$$w(0, y)=w(a, y)=0 \tag{18}$$

Zero deflection, unloaded edges

$$w(x, 0)=w(x, b)=0 \tag{19}$$

Zero slope, loaded edges

$$\frac{\partial w}{\partial x}(0, y)=\frac{\partial w}{\partial x}(a, y)=0 \tag{20}$$

Zero slope, unloaded edges

$$\frac{\partial w}{\partial y}(x, 0)=\frac{\partial w}{\partial y}(x, b)=0 \tag{21}$$

Fourier expansions.—In order to achieve a rapidly convergent solution, the principles established by the preceding example are used as the basis for choosing the Fourier

expansions to satisfy, term by term, the conditions of zero slope rather than those of zero deflection.

The buckling deformation corresponding to the lowest buckling stress is always symmetrical perpendicular to the direction of load but, depending on the aspect ratio of the plate, may be symmetrical or antisymmetrical in the direction of load. Thus, for symmetrical buckling, let

$$w=\sum_{m=0,2,4}^{\infty}\sum_{n=0,2,4}^{\infty} a_{mn}\cos\frac{m\pi x}{a}\cos\frac{n\pi y}{b} \tag{22}$$

and, for antisymmetrical buckling, let

$$w=\sum_{r=1,3,5}^{\infty}\sum_{n=0,2,4}^{\infty} a_{rn}\cos\frac{r\pi x}{a}\cos\frac{n\pi y}{b} \tag{23}$$

It is sufficient, for purposes of demonstration, to consider only the case of symmetrical buckling. Hereinafter, w therefore refers to the value given by equation (22).

Energy expressions.—Using the expansion given by equation (22) in the evaluation of the general energy and work integrals of equations (7) and (8) gives

$$V=\frac{\pi^4 Db}{8a^3}\sum_{m=0,2,4}^{\infty}\sum_{n=0,2,4}^{\infty}(m^2+n^2\beta^2)^2(1+\delta_{m0}+\delta_{0n})a_{mn}^2$$

$$T=\frac{\pi^2\sigma_x tb}{8a}\sum_{m=0,2,4}^{\infty}\sum_{n=0,2,4}^{\infty}m^2(1+\delta_{0n})a_{mn}^2$$

Then

$$V-T=\frac{\pi^4 Db}{8a^3}\sum_{m=0,2,4}^{\infty}\sum_{n=0,2,4}^{\infty}\frac{1}{A_{mn}}a_{mn}^2 \tag{24}$$

where

$$\frac{1}{A_{mn}}=[(m^2+n^2\beta^2)^2-km^2\beta^2](1+\delta_{m0}+\delta_{0n}).$$

Note that $V-T$ is independent of a_{00}, since $\frac{1}{A_{00}}=0$.

Constraining relationships.—The boundary conditions of zero slope (equations (20) and (21)) are satisfied by each term of the expansion of equation (22), but the conditions on deflection (equations (18) and (19)) must be satisfied by the expansion as a whole. Substituting w into equation (18) gives, along the loaded edges,

$$\begin{aligned} w(0,y)=w(a,y)=&\sum_{m=0,2,4}^{\infty}a_{m0}+\cos\frac{2\pi y}{b}\sum_{m=0,2,4}^{\infty}a_{m2}\\ &+\cos\frac{4\pi y}{b}\sum_{m=0,2,4}^{\infty}a_{m4}\\ &+\cos\frac{6\pi y}{b}\sum_{m=0,2,4}^{\infty}a_{m6}\\ &+\ldots\quad=0 \end{aligned}$$

Since this Fourier series must vanish, each infinite series that constitutes a coefficient of a cosine term must vanish. (All the Fourier coefficients of the Fourier expansion of the function zero are zero.) Hence

$$\sum_{m=0,2,4}^{\infty}a_{mj}=0 \qquad (j=0,2,4,\ldots) \tag{25}$$

By expressing the fact that there is zero deflection along the unloaded edges (equation (19)), it can be similarly shown that

$$\sum_{n=0,2,4}^{\infty}a_{in}=0 \qquad (i=0,2,4,\ldots) \tag{26}$$

Now, $V-T$ must be a minimum with respect to the a's, which are bound by equations (25) and (26). As the problem now stands, however, it is not in the form to which Lagrange's minimization process can be applied since $V-T$ does not contain a_{00}, whereas the constraint relationships do contain a_{00}. Hence, a_{00} is eliminated from the constraint relationships by subtracting the first of equations (26), the equation for $i=0$, from the first of equations (25), the equation for $j=0$. The final set of necessary constraining relationships on the minimization of the energy expression (24)

$$V-T=\frac{\pi^4 Db}{8a^3}\sum_{m=0,2,4}^{\infty}\sum_{n=0,2,4}^{\infty}\frac{1}{A_{mn}}a_{mn}^2$$

then becomes

$$\left.\begin{aligned} &\sum_{m=2,4,6}^{\infty}a_{m0}-\sum_{n=2,4,6}^{\infty}a_{0n}=0\\ &\sum_{m=0,2,4}^{\infty}a_{mj}=0 \qquad (j=2,4,6,\ldots)\\ &\sum_{n=0,2,4}^{\infty}a_{in}=0 \qquad (i=2,4,6,\ldots) \end{aligned}\right\} \tag{27}$$

Theory of upper and lower limit solutions.—A theoretically exact solution to the problem would be obtained if the energy expression (equation (24)) were minimized with respect to all the a's and at the same time all the relationships (27) were satisfied. This result follows from the facts that: (a) the expansion of equation (22) is a complete symmetrical set, capable of representing the exact symmetrical buckling deformation, and (b) the fulfillment of the conditions of equations (27) ensures that the boundary conditions are completely satisfied. An exact solution is not possible, however, because it would involve an infinite determinant, so that two different modifications of the ideal procedure are used to obtain approximate results. One of these methods gives an upper limit to the true buckling stress, whereas the other gives a lower limit.

An upper limit to the buckling stress can be found by arbitrarily setting some a's equal to zero, minimizing expression (24) with respect to the remaining a's, and satisfying all the constraint relationships (27). An upper limit is obtained inasmuch as arbitrarily setting some of the Fourier coefficients equal to zero has the effect of restraining the deflection of the plate, which in effect stiffens the interior of the plate and increases the stress required to buckle it.

A lower limit to the buckling stress can be found by minimizing expression (24) with respect to all the a's but satisfying only some of the constraining relationships (27). Neglecting some of the constraining relationships has the effect of giving the plate greater freedom at the edges and hence reducing the stress required to buckle the plate.

Lower limit solution.—In accordance with the requirements for a lower limit, the constraining relationships (27) will be satisfied only up to $j=q$ and $i=p$. By Lagrange's minimization process, the function to be minimized is then

$$G=\frac{\pi^4 Db}{8a^3}\sum_{m=0,2,4}^{\infty}\sum_{n=0,2,4}^{\infty}\frac{1}{A_{mn}}a_{mn}^2-\alpha\left(\sum_{m=2,4,6}^{\infty}a_{m0}-\sum_{n=2,4,6}^{\infty}a_{0n}\right)$$
$$-\sum_{j=2,4,6}^{q}\lambda_j\sum_{m=0,2,4}^{\infty}a_{mj}-\sum_{i=2,4,6}^{p}\mu_i\sum_{n=0,2,4}^{\infty}a_{in}$$

The α, $\lambda_2 \ldots \lambda_q$, $\mu_2 \ldots \mu_p$ are Lagrangian multipliers. The equations for minimizing $V-T$ with the constraining relationships (27) on the a's then become

$$\left.\begin{array}{ll}\dfrac{\partial G}{\partial a_{mn}}=0 & (m,n=0,2,4,\ldots)\\ \text{Equations (27) up to } i=p,\ j=q & \end{array}\right\}\qquad(28)$$

Evaluation of $\partial G/\partial a_{mn}$ gives

$$\frac{\pi^4 Db}{4a^3}\frac{1}{A_{mn}}a_{mn}-\alpha(\delta_{0n}-\delta_{m0})-\lambda_n-\mu_m=0\qquad(29)$$

where λ_n appears only if $2\leqq n\leqq q$ and μ_m appears only if $2\leqq m\leqq p$. From equation (29)

$$\frac{1}{A_{p+d,\ q+e}}a_{p+d,\ q+e}=0\qquad(d,e=2,4,6,\ldots)$$

Hence for any particular d, e, either

$$\frac{1}{A_{p+d,\ q+e}}=0$$

or

$$a_{p+d,\ q+e}=0$$

The first alternative, however, ordinarily would require k to be very high, corresponding to the buckling stress of a buckling mode with many waves in both directions. For the lowest buckling load, then,

$$a_{p+d,\ q+e}=0\qquad(d,e=2,4,6,\ldots)$$

It is therefore necessary to be concerned with only the other a's, which, from equation (29), are

$$\left.\begin{array}{l}a_{mn}=\dfrac{4a^3}{\pi^4 Db}A_{mn}(\lambda_n+\mu_m)\\ a_{m0}=\dfrac{4a^3}{\pi^4 Db}A_{m0}(\alpha+\mu_m)\\ a_{0n}=\dfrac{4a^3}{\pi^4 Db}A_{0n}(-\alpha+\lambda_n)\end{array}\right\}\qquad(m,n\neq 0)\qquad(30)$$

In equations (30), λ_n does not appear if $n>q$ and μ_m does not appear if $m>p$.

Substituting the values of a's given by equations (30) back into the constraining relationships (27) up to $j=q$, $i=p$ gives

$$\left.\begin{array}{l}\alpha\left(\displaystyle\sum_{m=2,4,6}^{\infty}A_{m0}+\sum_{n=2,4,6}^{\infty}A_{0n}\right)+\sum_{m=2,4,6}^{p}A_{m0}\mu_m-\sum_{n=2,4,6}^{q}A_{0n}\lambda_n=0\\ -A_{0j}\alpha+\displaystyle\sum_{m=2,4,6}^{p}A_{mj}\mu_m+\lambda_j\sum_{m=0,2,4}^{\infty}A_{mj}=0\qquad(j=2,4,6,\ldots q)\\ A_{i0}\alpha+\mu_i\displaystyle\sum_{n=0,2,4}^{\infty}A_{in}+\sum_{n=2,4,6}^{q}A_{in}\lambda_n=0\qquad(i=2,4,6,\ldots p)\end{array}\right\}\qquad(31)$$

These equations form a set of $\frac{1}{2}(p+q)+1$ linear homogeneous equations in α, $\mu_2 \ldots \mu_p$, $\lambda_2 \ldots \lambda_q$. Since when buckling occurs the a's are not all zero, by equations (30), the Lagrangian multipliers are not all zero. In order that equations (31) be compatible, the determinant of the coefficients of the Lagrangian multipliers must vanish. The vanishing of this stability determinant provides the determinantal equation that may be solved for k by substitution of trial values and interpolation.

That certain elements of the determinant consist of an infinite series of A_{mn} terms is evident; these series converge rapidly. Since such rapidly convergent series are calculable to any degree of accuracy, they may be considered as known quantities. Each value of A_{mn} represents the potential-energy contribution of a term in the expansion for w; hence, the effects of infinite subsets of expansion terms enter into this solution. Thus, for $p=q=2$, the expansion terms corresponding to the a's shown in table I enter into

the solution; similarly, the terms represented in table II enter into the solution when $p=q=4$.

TABLE I.—FOUR INFINITE STRIPS OF FOURIER COEFFICIENTS OF EXPANSION TERMS

$n \backslash m$	0	2	4	6	8	. . .
0	a_{00}	a_{20}	a_{40}	a_{60}	a_{80}	. . .
2	a_{02}	a_{22}	a_{42}	a_{62}	a_{82}	. . .
4	a_{04}	a_{24}				
6	a_{06}	a_{26}				
8	a_{08}	a_{28}				
.	.	.				
.	.	.				
.	.	.				

TABLE II.—SIX INFINITE STRIPS OF FOURIER COEFFICIENTS OF EXPANSION TERMS

$n \backslash m$	0	2	4	6	8	. . .
0	a_{00}	a_{20}	a_{40}	a_{60}	a_{80}	. . .
2	a_{02}	a_{22}	a_{42}	a_{62}	a_{82}	. . .
4	a_{04}	a_{24}	a_{44}	a_{64}	a_{84}	. . .
6	a_{06}	a_{26}	a_{46}			
8	a_{08}	a_{28}	a_{48}			
.	.	.	.			
.	.	.	.			
.	.	.	.			

Upper-limit solution.—The lower-limit solution satisfied only some of the constraining relationships (27) but assumed the existence of all the Fourier coefficients. If an upper limit is to be obtained, it will be necessary to satisfy all the constraining relationships while arbitrarily assuming some a's to be zero.

As a direct result of the necessity of satisfying all the constraining relationships in the upper-limit solution, it is found that the first of equations (27) is redundant and may be discarded, since it is automatically satisfied when all the remaining equations (27) are satisfied. As a proof of this redundancy, the conditions

$$\sum_{m=0,2,4}^{\infty} a_{mj}=0 \quad . \ (j=2,4,6,\ldots)$$

are summed over j and subtracted from the sum of the conditions

$$\sum_{n=0,2,4}^{\infty} a_{in}=0 \qquad (i=2,4,6,\ldots)$$

over i and give

$$\sum_{i=2,4,6}^{\infty} \sum_{n=0,2,4}^{\infty} a_{in}-\sum_{j=2,4,6}^{\infty} \sum_{m=0,2,4}^{\infty} a_{mj}=0$$

Simplifying this equation

$$\sum_{i=2,4,6}^{\infty} a_{i0}-\sum_{j=2,4,6}^{\infty} a_{0j}=0$$

which is precisely the first of equations (27).

It is to be emphasized that the redundancy of a constraining relationship is a peculiarity of only the upper-limit solution, since, as shown by the proof given, the redundancy depends on the fact that all the constraining relationships must be satisfied.

With the elimination of the redundant condition, the necessary constraint relationships become

$$\sum_{m=0,2,4}^{\infty} a_{mj}=0 \qquad (j=2,4,6,\ldots) \tag{32}$$

$$\sum_{n=0,2,4}^{\infty} a_{in}=0 \qquad (i=2,4,6,\ldots) \tag{33}$$

At this point, in accordance with upper-limit theory, it is necessary arbitrarily to set certain a's equal to zero. It is possible to take advantage of the Lagrangian multiplier method by allowing infinite rather than finite sets of a's to exist and still to obtain a stability determinant of finite order. Thus, infinite strips of coefficients of the type shown in tables 1 and 2 can enter into the solution. In the lower-limit case, the existence of all coefficients was assumed, but the coefficients $a_{p+d,\,q+e}$ were proved to be zero; in this upper-limit solution, it will be arbitrarily assumed that these same a's are zero; thus

$$a_{p+d,\,q+e}=0 \qquad (d,\,e=2,\,4,\,6,\ldots)$$

The constraining relationships (32) and (33) become

$$\sum_{m=0,2,4}^{\infty} a_{mj}=0 \qquad (j=2,4,6,\ldots q) \tag{32a}$$

$$\sum_{m=0,2,4}^{p} a_{mj}=0 \qquad (j=q+2,\,q+4,\ldots\infty) \tag{32b}$$

$$\sum_{n=0,2,4}^{\infty} a_{in}=0 \qquad (i=2,\,4,\,6,\ldots p) \tag{33a}$$

$$\sum_{n=0,2,4}^{q} a_{in}=0 \qquad (i=p+2,\,p+4,\ldots\infty) \tag{33b}$$

The function to be minimized is

$$G=\frac{\pi^4 Db}{8a^3}\sum_{m=0,2,4}^{\infty}\sum_{n=0,2,4}^{\infty}\frac{1}{A_{mn}}a_{mn}^2-\sum_{j=2,4,6}^{q}\lambda_j\sum_{m=0,2,4}^{\infty}a_{mj}$$
$$-\sum_{j=q+2,q+4}^{\infty}\lambda_j\sum_{m=0,2,4}^{p}a_{mj}-\sum_{i=2,4,6}^{p}\mu_i\sum_{n=0,2,4}^{\infty}a_{in}$$
$$-\sum_{i=p+2,p+4}^{\infty}\mu_i\sum_{n=0,2,4}^{q}a_{in}$$

The first double summation of this equation extends over only the values of m and n such that

$$m \leqq p \text{ if } n > q$$

$$n \leqq q \text{ if } m > p$$

Setting $\frac{\partial G}{\partial a_{mn}}=0$ then gives, for all the a's arbitrarily allowed to exist,

$$a_{mn}=\frac{4a^3}{\pi^4 Db}\left[A_{mn}(\lambda_n+\mu_m)\right]$$

where λ_0 and μ_0 do not exist. Substituting back into the constraint equations (32a), (32b), (33a), and (33b) gives

$$\lambda_j \sum_{m=0,2,4}^{\infty} A_{mj}+\sum_{m=2,4,6}^{\infty} A_{mj}\mu_m=0 \quad (j=2,4,6,\ldots q) \tag{34a}$$

$$\lambda_j \sum_{m=0,2,4}^{p} A_{mj}+\sum_{m=2,4,6}^{p} A_{mj}\mu_m=0 \quad (j=q+2,q+4,\ldots\infty) \tag{34b}$$

$$\sum_{n=2,4,6}^{\infty} A_{in}\lambda_n+\mu_i \sum_{n=0,2,4}^{\infty} A_{in}=0 \quad (i=2,4,6,\ldots p) \tag{35a}$$

$$\sum_{n=2,4,6}^{q} A_{in}\lambda_n+\mu_i \sum_{n=0,2,4}^{q} A_{in}=0 \quad (i=p+2,p+4,\ldots\infty) \tag{35b}$$

These equations involve all the Lagrangian multipliers. They can be reduced to a set of equations, however, in $\lambda_2 \ldots \lambda_q$, $\mu_2 \ldots \mu_p$ in the following manner:

From equation (35b), for $i=p+2, p+4, \ldots$

$$\mu_i=\frac{-\sum_{n=2,4,6}^{q} A_{in}\lambda_n}{\sum_{n=0,2,4}^{q} A_{in}}$$

From equation (34b), for $j=q+2, q+4, \ldots$

$$\lambda_j=\frac{-\sum_{m=2,4,6}^{p} A_{mj}\mu_m}{\sum_{m=0,2,4}^{p} A_{mj}}$$

Substituting these expressions for μ_i and λ_j into equations (34a) and (35a), respectively, gives as the final stability equations:

$$\left.\begin{aligned}
&\lambda_j \sum_{m=0,2,4}^{\infty} A_{mj}+\sum_{m=2,4,6}^{p} A_{mj}\mu_m-\sum_{m=p+2,p+4}^{\infty}{}' A_{mj}\left(\frac{\sum_{n=2,4,6}^{q} A_{mn}\lambda_n}{\sum_{n=0,2,4}^{q} A_{mn}}\right)=0 \qquad (j=2,4,6,\ldots q)\\
&\sum_{n=2,4,6}^{q} A_{in}\lambda_n-\sum_{n=q+2,q+4}^{\infty} A_{in}\left(\frac{\sum_{m=2,4,6}^{p} A_{mn}\mu_m}{\sum_{m=0,2,4}^{p} A_{mn}}\right)+\mu_i \sum_{n=0,2,4}^{\infty} A_{in}=0 \qquad (i=2,4,6,\ldots p)
\end{aligned}\right\} \tag{36}$$

Equations (36) form a set of $\frac{1}{2}(p+q)$ linear homogeneous equations in $\lambda_2 \ldots \lambda_q$, $\mu_2 \ldots \mu_p$. The stability determinant is the determinant of the coefficients of the λ's and μ's.

It is of interest to note that in the usual Rayleigh-Ritz solutions only finite sets of expansion terms are ever taken into account, and the order of the determinant obtained is ordinarily equal to the number of terms considered. It is then reasonable that a particular determinant obtained by the Lagrangian multiplier method, which considers infinitely more expansion terms than a Rayleigh-Ritz determinant of equal order, may be expected to give a more accurate result.

Numerical example.—For the case of a square plate, $\beta=1$, upper and lower limits were computed. The results for the buckling-stress coefficient k were:

Approximation	Lower limit	Upper limit
First; $p=q=2$	9.99	10.11
Second; $p=q=4$	10.07	10.08

The expectation that the Lagrangian multiplier method should give closer upper limits than the Rayleigh-Ritz method, for a given-order determinant, can be confirmed for this example. A second-order Lagrangian multiplier determinant gives an upper limit of $k=10.11$, whereas Maulbetsch (reference 4) and Smith (reference 5) use complicated deflection functions in the Rayleigh-Ritz method to derive third-order determinants that give, respectively, $k=10.48$ and $k=10.11$.

It is seen that the second approximation, requiring the evaluation of a fourth-order determinant for the upper limit and a fifth-order determinant for the lower limit, definitely establishes the value of k to within 0.1 percent.

Levy (reference 3) used an ingenious method of obtaining lower limits that is, in fact, equivalent to the Trefftz method of using double sine series and satisfying the zero edge-slope condition by the Lagrangian multiplier method. On the basis of computations involving determinants up to order twenty, Levy concluded that his results obtained from tenth-order determinants are within 0.1 percent of the true results.

inasmuch as Levy obtained $k=10.074$ for the square plate, the present relatively simple upper- and lower-limit calculations show that his estimated limit of error is correct for this case.

CONCLUSIONS

1. The Lagrangian multiplier method can be used to compute accurate upper and lower limits to the compressive buckling stress of a clamped rectangular plate, thereby bracketing the true result.

2. From a consideration of rapidity of convergence toward the exact solution in clamped-plate problems, it is preferable to use an expansion that satisfies the zero-slope boundary conditions term by term rather than the zero-deflection boundary conditions.

3. Because of the fact that the Lagrangian multiplier method permits the effects of infinite subsets of expansion terms to enter into the solution, it is believed that a particular stability determinant derived by the Lagrangian multiplier method will, in general, yield a closer upper limit than that obtained from a determinant of equal order in the Rayleigh-Ritz method.

4. It is expected that the method of Lagrangian multipliers may be useful in the analysis of other stability and vibration problems. In particular, the method may be immediately applied to the determination of vibration frequencies of clamped plates, and to the determination of buckling stresses of clamped plates under compression in two directions.

Langley Memorial Aeronautical Laboratory,
National Advisory Committee for Aeronautics,
Langley Field, Va., *May 8, 1946.*

APPENDIX

GENERAL PROOF OF THE METHOD OF LAGRANGIAN MULTIPLIERS

Let it be required to minimize

$$f(x_1, x_2, x_3, \ldots x_N) \tag{A1}$$

where the N x's are bound by the P independent relationships ($P<N$)

$$\varphi_J(x_1, x_2, x_3, \ldots x_N)=0 \quad (J=1, 2, 3, \ldots P) \tag{A2}$$

It will be proved that the equations for determining the minimizing values of the x's are:

$$\frac{\partial f}{\partial x_K}+\lambda_1\frac{\partial \varphi_1}{\partial x_K}+\lambda_2\frac{\partial \varphi_2}{\partial x_K}+\ldots+\lambda_P\frac{\partial \varphi_P}{\partial x_K}=0 \quad (K=1,2,3,\ldots N) \tag{A3}$$

$$\varphi_J(x_1, x_2, x_3, \ldots x_N)=0 \quad (J=1, 2, 3, \ldots P) \tag{A2}$$

The λ's are Lagrangian multipliers; these $N+P$ equations determine N x's and P λ's.

If the values of only $N-P$ x's are known, the remaining P x's are determined from the P relationships (A2). For convenience, consider the last P x's in equation (A1) to be dependent upon the first $N-P$ x's. Then for f to be a minimum its first partial derivatives with respect to the independent x's must vanish, or:

$$\frac{\partial f}{\partial x_M}+\frac{\partial f}{\partial x_{N-P+1}}\frac{\partial x_{N-P+1}}{\partial x_M}+\frac{\partial f}{\partial x_{N-P+2}}\frac{\partial x_{N-P+2}}{\partial x_M}+\ \ldots\ +\frac{\partial f}{\partial x_N}\frac{\partial x_N}{\partial x_M}=0 \qquad (M=1, 2, 3, \ldots (N-P)) \tag{A4}$$

But each of these equations contains P quantities that cannot be directly evaluated—the derivatives of the dependent variables with respect to the independent variables. For each value of M, these P derivatives are determined by differentiating each of the P constraint relationships (A2) with respect to x_M. Thus,

$$\frac{\partial \varphi_J}{\partial x_M}+\frac{\partial \varphi_J}{\partial x_{N-P+1}}\frac{\partial x_{N-P+1}}{\partial x_M}+\frac{\partial \varphi_J}{\partial x_{N-P+2}}\frac{\partial x_{N-P+2}}{\partial x_M}+\ \ldots\ +\frac{\partial \varphi_J}{\partial x_N}\frac{\partial x_N}{\partial x_M}=0 \qquad (J=1, 2, 3, \ldots P) \tag{A5}$$

Now, for each particular value of M, equation (A4) and the P equations (A5) make up a set of $P+1$ linear homogeneous equations in the $P+1$ quantities $1, \frac{\partial x_{N-P+1}}{\partial x_M}, \frac{\partial x_{N-P+2}}{\partial x_M}, \ldots \frac{\partial x_N}{\partial x_M}$. Since these quantities are surely not all zero, the determinant of their coefficients must vanish. Hence, it is found that for f to be a minimum it must necessarily be true that:

$$\begin{vmatrix} \frac{\partial f}{\partial x_M} & \frac{\partial f}{\partial x_{N-P+1}} & \frac{\partial f}{\partial x_{N-P+2}} & \cdots & \frac{\partial f}{\partial x_N} \\ \frac{\partial \varphi_1}{\partial x_M} & \frac{\partial \varphi_1}{\partial x_{N-P+1}} & \frac{\partial \varphi_1}{\partial x_{N-P+2}} & \cdots & \frac{\partial \varphi_1}{\partial x_N} \\ \frac{\partial \varphi_2}{\partial x_M} & \frac{\partial \varphi_2}{\partial x_{N-P+1}} & \frac{\partial \varphi_2}{\partial x_{N-P+2}} & \cdots & \frac{\partial \varphi_2}{\partial x_N} \\ \cdots & \cdots & \cdots & \cdots & \cdots \\ \frac{\partial \varphi_P}{\partial x_M} & \frac{\partial \varphi_P}{\partial x_{N-P+1}} & \frac{\partial \varphi_P}{\partial x_{N-P+2}} & \cdots & \frac{\partial \varphi_P}{\partial x_N} \end{vmatrix}=0 \quad (M=1, 2, 3, \ldots (N-P)) \tag{A6}$$

It will now be demonstrated that these necessary minimization equations will hold if equations (A3) hold. Interchanging the rows and columns of the determinant in equation (A6) gives:

$$\begin{vmatrix} \frac{\partial f}{\partial x_M} & \frac{\partial \varphi_1}{\partial x_M} & \frac{\partial \varphi_2}{\partial x_M} & \cdots & \frac{\partial \varphi_P}{\partial x_M} \\ \frac{\partial f}{\partial x_{N-P+1}} & \frac{\partial \varphi_1}{\partial x_{N-P+1}} & \frac{\partial \varphi_2}{\partial x_{N-P+1}} & \cdots & \frac{\partial \varphi_P}{\partial x_{N-P+1}} \\ \frac{\partial f}{\partial x_{N-P+2}} & \frac{\partial \varphi_1}{\partial x_{N-P+2}} & \frac{\partial \varphi_2}{\partial x_{N-P+2}} & \cdots & \frac{\partial \varphi_P}{\partial x_{N-P+2}} \\ \cdots & \cdots & \cdots & \cdots & \cdots \\ \frac{\partial f}{\partial x_N} & \frac{\partial \varphi_1}{\partial x_N} & \frac{\partial \varphi_2}{\partial x_N} & \cdots & \frac{\partial \varphi_P}{\partial x_N} \end{vmatrix}=0 \quad (M=1, 2, 3, \ldots (N-P)) \tag{A7}$$

The vanishing of this determinant is, however, precisely the condition of compatibility of the equations

$$\left.\begin{array}{l}
\dfrac{\partial f}{\partial x_M} + \lambda_1 \dfrac{\partial \varphi_1}{\partial x_M} + \lambda_2 \dfrac{\partial \varphi_2}{\partial x_M} + \ldots + \lambda_P \dfrac{\partial \varphi_P}{\partial x_M} = 0 \\
\dfrac{\partial f}{\partial x_{N-P+1}} + \lambda_1 \dfrac{\partial \varphi_1}{\partial x_{N-P+1}} + \lambda_2 \dfrac{\partial \varphi_2}{\partial x_{N-P+1}} + \ldots + \lambda_P \dfrac{\partial \varphi_P}{\partial x_{N-P+1}} = 0 \\
\dfrac{\partial f}{\partial x_{N-P+2}} + \lambda_1 \dfrac{\partial \varphi_1}{\partial x_{N-P+2}} + \lambda_2 \dfrac{\partial \varphi_2}{\partial x_{N-P+2}} + \ldots + \lambda_P \dfrac{\partial \varphi_P}{\partial x_{N-P+2}} = 0 \\
\cdots\cdots\cdots\cdots\cdots\cdots\cdots\cdots \\
\dfrac{\partial f}{\partial x_N} + \lambda_1 \dfrac{\partial \varphi_1}{\partial x_N} + \lambda_2 \dfrac{\partial \varphi_2}{\partial x_N} + \ldots + \lambda_P \dfrac{\partial \varphi_P}{\varphi x_N} = 0
\end{array}\right\} \tag{A8}$$

when they are considered as linear homogeneous equations in the quantities 1, λ_1, λ_2, . . . λ_P.

Since a determinant (A7) exists for each value of M up to $(N-P)$, a set of equations (A8) exists for each M. It is seen that in these sets only the first equation varies, since only the first equation depends upon M. Observation shows that all the $(N-P)$ determinants of equation (A7) can be derived from the set of N equations

$$\frac{\partial f}{\partial x_K} + \lambda_1 \frac{\partial \varphi_1}{\partial x_K} + \lambda_2 \frac{\partial \varphi_2}{\partial x_K} + \ldots + \lambda_P \frac{\partial \varphi_P}{\partial x_K} = 0 \qquad (K=1, 2, 3, \ldots N) \tag{A3}$$

by successively writing the determinants of compatibility of the last P equations with each of the first $(N-P)$ equations in turn. It has thus been proven that if equations (A3) are true, the minimizing equations (A6), equivalent to equations (A7), must hold.

It is seen, however, that equations (A3) are N equations in $(N+P)$ unknowns consisting of N x's and P λ's. The remaining necessary P equations come from the original equations of constraint (A2). Hence, the simultaneous equations (A2) and (A3)

$$\frac{\partial f}{\partial x_K} + \lambda_1 \frac{\partial \varphi_1}{\partial x_K} + \lambda_2 \frac{\partial \varphi_2}{\partial x_K} + \ldots + \lambda_P \frac{\partial \varphi_P}{\partial x_K} = 0 \qquad (K=1, 2, 3, \ldots N) \tag{A3}$$

$$\varphi_J(x_1, x_2, x_3, \ldots x_N) = 0 \qquad (J=1, 2, 3, \ldots P) \tag{A2}$$

are necessary equations for the minimization of $f(x_1, x_2, x_3, \ldots x_N)$, which was to be proved.

REFERENCES

1. Trefftz, E.: Die Bestimmung der Knicklast gedrückter, rechtackiger Platten. Z. f. a. M. M., Bd. 15, Heft 6, Dec. 1935, pp. 339–344.
2. Reissner, Eric: Buckling of Plates with Intermediate Rigid Supports. Jour. Aero. Sci., vol. 12, no. 3, July 1945, pp. 375–377.
3. Levy, Samuel: Buckling of Rectangular Plates with Built-In Edges. Jour. Appl. Mech., vol. 9, no. 4, Dec. 1942, pp. A-171–A-174.
4. Maulbetsch, J. L.: Buckling of Compressed Rectangular Plates with Built-In Edges. Jour. Appl. Mech., vol. 4, no. 2, June 1937, pp. A-59–A-62.
5. Smith, R. C. T.: The Buckling of Flat Plywood Plates in Compression. Rep. ACA-12, Australian Council for Aeronautics, Dec. 1944.
6. Timoshenko, S.: Theory of Elastic Stability. McGraw-Hill Book Co., Inc., 1936.