REPORT No. 851

THIN OBLIQUE AIRFOILS AT SUPERSONIC SPEED

By Robert T. Jones

SUMMARY

The well-known methods of thin-airfoil theory have been extended to oblique or sweptback airfoils of finite aspect ratio moving at supersonic speeds. The cases considered thus far are symmetrical airfoils at zero lift having plan forms bounded by straight lines. Because of the conical form of the elementary flow fields, the results are comparable in simplicity to the results of the two-dimensional thin-airfoil theory for subsonic speeds.

In the case of untapered airfoils swept back behind the Mach cone the pressure distribution at the center section is similar to that given by the Ackeret theory for a straight airfoil. With increasing distance from the center section the distribution approaches the form given by the subsonic-flow theory. The pressure drag is concentrated chiefly at the center section and for long wings a slight negative drag may appear on outboard sections.

INTRODUCTION

In reference 1 it was pointed out that the wave drag of an infinite cylindrical airfoil disappears when the airfoil is yawed to an angle greater than the Mach angle. This observation led to the conclusion that the drag of a finite airfoil could be greatly reduced by the use of sufficient sweepback. With such a sweptback wing the wave drag would be associated with departures from the ideal two-dimensional flow at the root or tip sections and would thus be a function of the aspect ratio. The present report extends the theory of reference 1 to take account of these effects.

The treatment is based on the theory of small disturbances in a frictionless compressible fluid. The idealized fluid and its equations of motion are identical with those employed in acoustics in the theory of sound waves of small amplitude. The application of the theory is thus limited to bodies having thin cross sections so that the velocity of motion imparted to the fluid is small relative to the velocity of sound and so that the pressure disturbances produced are small relative to the ambient pressure.

The adaptation of the sound-wave theory to the aerodynamics of moving bodies was suggested many years ago by Prandtl. The theory was applied by Ackeret (reference 2) to thin airfoils moving at supersonic speed. Ackeret's treatment is limited, however, to infinitely long cylindrical airfoils moving transversely. The present theory may be considered an extension of Ackeret's theory to take into account wings of finite span and wings having tapered or sweptback plan forms. In the case of sweptback plan forms the results are markedly different from those obtained by the Ackeret theory and approach the values indicated in references 1 and 3.

In reference 4 Busemann describes a method for calculating the supersonic flow over bodies which produce a conical pressure field. Busemann shows that the flow around cones of circular cross sections as well as the flow around the tip of a rectangular lifting surface satisfies this condition. The fact that a great variety of three-dimensional flows can be constructed by the superposition of conical and cylindrical flow fields leads to an essential simplification of the airfoil theory at supersonic speeds.

The present treatment differs from Busemann's in that it is further limited to flat bodies, that is, bodies which are thin in both longitudinal and transverse sections. This additional restriction leads to a much simpler mathematical treatment and one which is applicable to a wide variety of airfoil shapes. Symmetrical nonlifting bodies are also treated in reference 5 where use is made of integral expressions corresponding to the velocity potential of plane-source distribution.

SYMBOLS

V	flight velocity
M	Mach number
x, y, z	coordinates
ξ	point on X-axis
x_l	limit of integration
ϕ	disturbance-velocity potential
u, v, w	disturbance-velocity components
u_l	value of u at x_l
$\bar{u}$	value of u for conjugate arrangement
p	local pressure
q	dynamic pressure $\left(\frac{1}{2}\rho V^2\right)$
ρ	density of air
P_n, Q_n	Legendre functions
I	source-strength factor
D	differential operator
C_D	drag coefficient
t	thickness of wing
m	slope of line source (absolute value)
c	chord of wing

THE OBLIQUE LINE SOURCE

The assumptions of small disturbances and a constant velocity of sound throughout the fluid lead to the well-known linearized equation for the velocity potential ϕ (see reference 6)

$$(1-M^2)\phi_{xx}+\phi_{yy}+\phi_{zz}=0 \tag{1}$$

The analysis is simplified by introducing the coordinates

$$\left.\begin{aligned} x_1&=x\\ y_1&=\sqrt{M^2-1}\,y\\ z_1&=\sqrt{M^2-1}\,z \end{aligned}\right\} \tag{2}$$

Dropping the subscripts from the transformed coordinates gives

$$\phi_{xx}-\phi_{yy}-\phi_{zz}=0 \tag{3}$$

According to the thin-airfoil theory the pressures on the transformed airfoil are given by

$$\begin{aligned} \frac{\Delta p}{q}&=2\frac{u}{V}\\ &=\frac{2}{V}\frac{\partial\phi}{\partial x} \qquad (z\to 0) \end{aligned} \tag{4}$$

and the slope of the airfoil surface $\frac{dz}{dx}$ is equal to the slope of the streamlines near the chord plane; that is,

$$\begin{aligned} \frac{dz}{dx}&=\frac{w}{V}\\ &=\frac{1}{V}\frac{\partial\phi}{\partial z} \qquad (z\to 0) \end{aligned} \tag{5}$$

The use of the coordinate transformation, equation (2), will be understood in the following development. The results are therefore applicable directly to a Mach number of $\sqrt{2}$. For an equivalent airfoil at another Mach number the y- and z-coordinates of the surface will be multiplied by $\sqrt{M^2-1}$ while the pressure coefficients at corresponding points will be divided by the quantity M^2-1.

The elementary solution of equation (3) for a point source is

$$\phi_0=\frac{1}{\sqrt{x^2-y^2-z^2}}$$

This solution is directly related to the subsonic potential

$$\phi_0=\frac{1}{\sqrt{x^2+y^2+z^2}}$$

In the subsonic case the equipotential surfaces are, however, ellipsoids, whereas in the supersonic case the equipotential surfaces are hyperboloids limited by the Mach cone. (See reference 6 for the derivation of these elementary solutions.)

Because of the linearity of equation (1) a solution may be used to denote one of the velocity components rather than the velocity potential. The specification of one component in this manner actually describes the whole flow field since the other components may be obtained by integrating the given component to obtain the velocity potential and then differentiating the results along the desired directions to obtain the desired components. This procedure is especially useful in the thin-airfoil theory, where the complete velocity field may not be required.

Adopting the foregoing procedure, one may write

$$u_0=\frac{1}{\sqrt{x^2-y^2-z^2}}$$

Since u is proportional to the pressure, such a solution corresponds to a point source in the pressure field. The solution for an oblique line source may be obtained by integrating for the effect of a row of point sources along the line $y=mx$. It will be shown that such a line source satisfies the boundary condition for a thin wedge-shape body. This solution, as well as other expressions relating to oblique airfoils, can be most conveniently expressed by referring to the oblique coordinates

$$\begin{aligned} x'&=x-my\\ y'&=y-mx\\ z'&=\sqrt{1-m^2}\,z \end{aligned}$$

(See fig. 1.) It may be shown that if any function $f(x, y, z)$ is a solution of

$$f_{xx}-f_{yy}-f_{zz}=0$$

then $f(x', y', z')$ is also a solution. In particular, the point-source solution becomes

$$\frac{1}{\sqrt{x'^2-y'^2-z'^2}}=\frac{1}{\sqrt{1-m^2}}\frac{1}{\sqrt{x^2-y^2-z^2}}$$

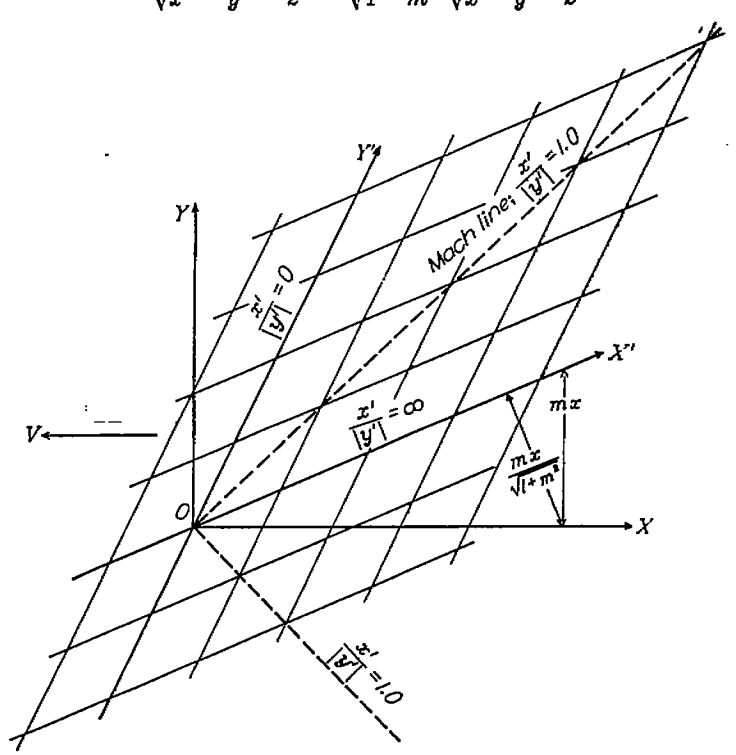

FIGURE 1.—Oblique coordinates.
$x'=x-my$
$y'=y-mx$
$z'=\sqrt{1-m^2}\,z$

Hence the integration for the effect of an inclined line of sources may be performed directly along the oblique x'-axis; thus, for $m<1.0$

$$u=I\int_0^{\xi'_1}\frac{d\xi'}{\sqrt{(x'-\xi')^2-y'^2-z'^2}}$$

$$=I\cosh^{-1}\frac{x'}{\sqrt{y'^2+z'^2}} \tag{6}$$

where ξ'_1 is the position of the last source whose Mach cone includes the point (x', y', z') and is given by

$$\xi'_1=x'-\sqrt{y'^2+z'^2}$$

When m approaches 1.0 the source line approaches coincidence with the Mach cone, corresponding to a transverse velocity component equal to the velocity of sound.

For values of m greater than 1.0 the integration yields

$$u=-Ii\cos^{-1}\frac{x'}{\sqrt{y'^2+z'^2}} \tag{7}$$

It will be seen that in this case I is imaginary.

The vertical velocity near $z=0$, which determines the shape of the boundary, may be determined by integrating u with respect to x and then differentiating the resulting velocity potential with respect to z; thus (see appendix),

$$w=\frac{\partial\phi}{\partial z}$$

$$=\frac{\partial}{\partial z}\int u\,dx$$

$$=\pm\pi\frac{I}{m}\sqrt{1-m^2} \tag{8}$$

if $z\to 0$ and $y'<0$. If $y'>0$, $w=0$. There is thus a discontinuity in the vertical velocity of the streamlines when they cross the line source at $y'=0$. For small values of I/m this discontinuity in vertical velocity agrees with the boundary condition for a simple wedge shape having a small wedge angle. (See fig. 2.)

If the source strength I is held constant and m is allowed to approach zero, the wedge angle ultimately becomes large. At $m=0$ the line source actually satisfies the boundary condition for the circular cone (reference 7), but it is found that the slope of the conical boundary does not agree with the slope of the streamlines near $z=0$ and hence the theory no longer holds. The condition $\frac{m}{I}\to 0$ thus represents the transition from an oblique airfoil to a body of revolution and will be avoided in the present analysis by restricting the formulas to flat bodies, that is, airfoils that are thin in both longitudinal and transverse section.

AIRFOIL OF WEDGE SECTION

Over the wedge section near the plane $z=0$, the formula (6) becomes simply

$$u=I\cosh^{-1}\frac{x'}{|y'|} \tag{9}$$

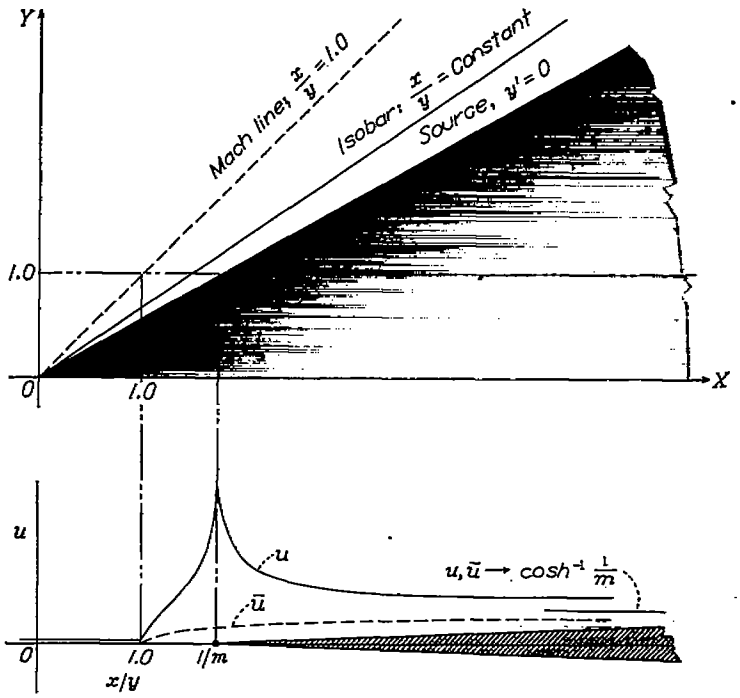

FIGURE 2.—Pressure field for oblique wedge where $m<1.0$. $\frac{\Delta p}{q}=\frac{2u}{V}$.

$$u=\cosh^{-1}\frac{x-my}{|y-mx|}$$

$$\bar{u}=\cosh^{-1}\frac{x+my}{|y+mx|}$$

where $|y'|$ denotes the absolute magnitude of $y'=y-mx$. The pressure is thus constant along the radial lines

$$\frac{x'}{y'}=\text{Constant} \tag{10}$$

and is conveniently represented by the variation along a line parallel to the X-axis. Figure 2 shows the oblique wedge-shape figure corresponding to a line source with $m<1.0$. In this case the pressure field is confined to the interior of the Mach cone $x^2-y^2-z^2=x'^2-y'^2-z'^2=0$ and the theory, unlike the Ackeret theory, indicates a stagnation point along the leading edge. (Actually, of course, the thin-airfoil theory shows an infinite velocity at such points, but this is to be interpreted as a velocity of the order of magnitude of the flight velocity V. The pressure to be expected along the leading edge is the stagnation pressure corresponding to the transverse velocity component.)

Given $\frac{dz}{dx}=\frac{w}{V}$, the wedge angle measured in downstream sections, the source strength must vary with m according to

$$I=\frac{V}{\pi}\frac{m}{\sqrt{1-m^2}}\frac{dz}{dx} \tag{11}$$

(from equation (7)). Then

$$\frac{\Delta p}{q}=\frac{2}{\pi}\frac{dz}{dx}\frac{m}{\sqrt{1-m^2}}\cosh^{-1}\frac{x'}{|y'|} \tag{12}$$

If m exceeds 1.0, the leading edge of the airfoil will lie outside the Mach cone. In this case

$$\frac{\Delta p}{q}=\frac{2}{\pi}\frac{dz}{dx}\frac{m}{\sqrt{m^2-1}}\cos^{-1}\frac{x'}{\sqrt{y'^2+z'^2}} \tag{13}$$

In the region between the leading edge and the Mach cone $\cos^{-1}\frac{x'}{|y'|}$ is constant and equal to π; hence the pressure in this region is constant, that is,

$$\frac{\Delta p}{q}=2\frac{dz}{dx}\frac{m}{\sqrt{m^2-1}} \tag{14}$$

Figure 3 illustrates this result.

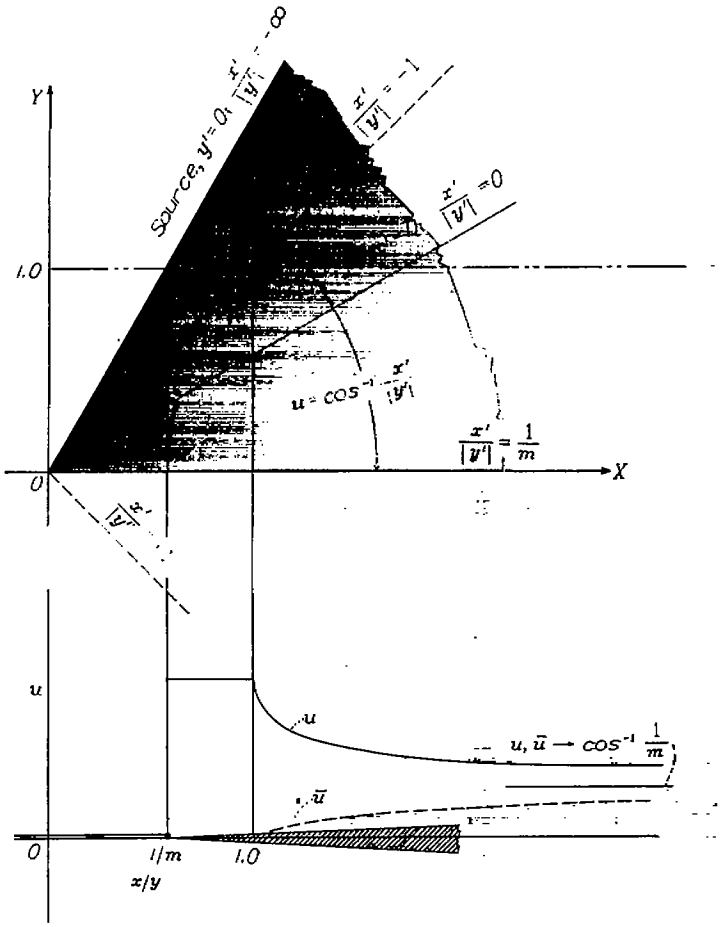

FIGURE 3.—Pressure field for oblique wedge where $m>1.0$. $\frac{\Delta p}{q}=\frac{2u}{V}$.

If $m\rightarrow\infty$ a semi-infinite airfoil with its leading edge at right angles to the direction of flight is obtained; here

$$\frac{x-my}{\sqrt{(y-mx)^2+(1-m^2)z^2}}=\frac{-y}{\sqrt{x^2-z^2}} \tag{15}$$

and $\frac{\Delta p}{q}=2\frac{dz}{dx}$ wherever $y>\sqrt{x^2-z^2}$. This value agrees with the Ackeret theory.

AIRFOILS BOUNDED BY PLANE SURFACES

The distribution of pressure over symmetrical airfoils bounded by plane surfaces can be obtained by superimposing the pressure fields for several line sources and sinks. This superposition is greatly simplified by the conical form of the pressure field for each single line source. Because of this form, the whole distribution in the plane $z=0$ is, in effect, represented by a single curve. If the velocity field for a line source beginning at the origin (equation (6)) is denoted by u and that beginning at $x=-1$ is denoted by u_{-1}, and so forth, the sum

$$u_{-1}-u_{+1}$$

represents the velocity over a plate of uniform thickness having a beveled leading edge of constant width. (See fig. 4.) Similarly

$$u_{-1}-2u+u_{+1}$$

represents the pressure field for an airfoil having diamond-shape cross sections.

The superposition required for several sources or sinks can be accomplished by manipulation of a single curve if it is remembered that u is a function of the ratio x/y. Figure 4 illustrates this process for a source and a sink. In terms of the ratio x/y the separation of source and sink and hence the scale of the chord length continually diminishes with increasing distance from the root section.

At large distances from the vertex ($x'\rightarrow\infty$) the expression (for $m<1.0$)

$$u_{-1}-u_{+1}\propto\cosh^{-1}\frac{x'+1}{|y'-m|}-\cosh^{-1}\frac{x'-1}{|y'+m|} \tag{16}$$

is found to approach the value

$$\log\frac{|y'+m}{|y'-m}=2Q_0\left(\frac{y'}{m}\right) \tag{17}$$

where Q_0 is the Legendre function. (See reference 7.)

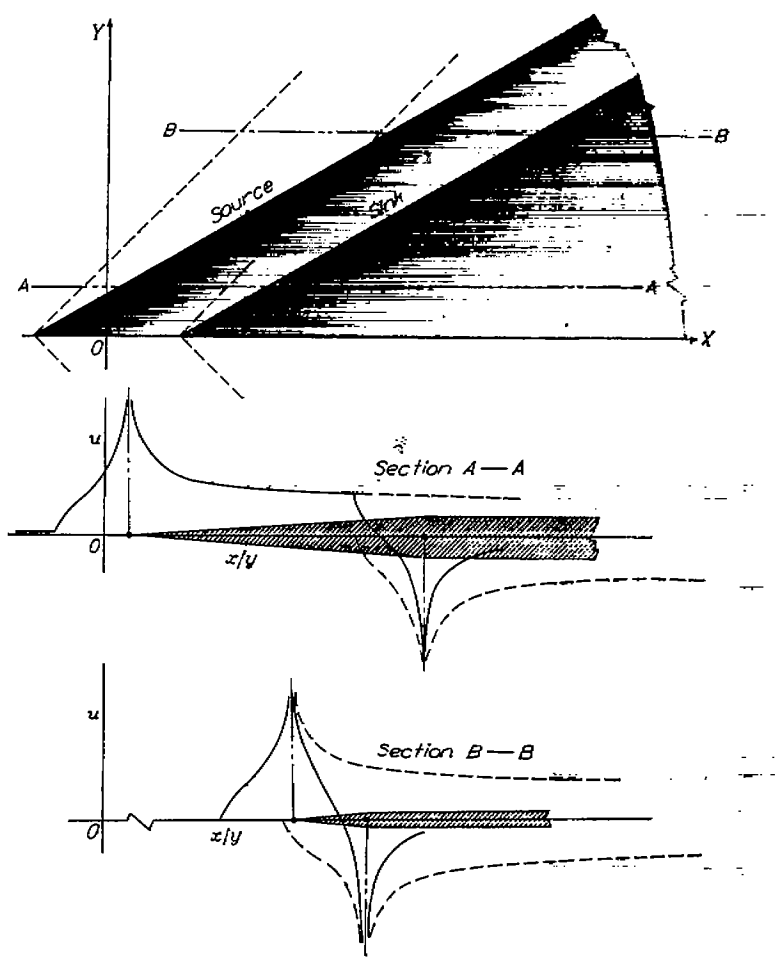

FIGURE 4.—Superposition of source and sink to obtain plate with beveled edge.

In the thin-airfoil theory for subsonic speeds it can be shown that if

$$w \propto P_n(x)$$

$$\propto V\frac{dz}{dx} \tag{18}$$

then

$$u \propto Q_n(x) \tag{19}$$

since Neumann's formula (reference 8, p. 116)

$$Q_n = \frac{1}{2}\int_{-1}^{+1} \frac{P_n(\xi)}{(x-\xi)}\, d\xi \tag{20}$$

may be interpreted as the integration for the velocity distribution due to an array of sources of strength

$$w\, d\xi = P_n(\xi)\, d\xi$$

along the chord of the airfoil. The expression $Q_0 \frac{y'}{m}$ of equation (17) thus represents the subsonic pressure distribution over the beveled edge.[1]

At the root section ($y=0$) only the forward source need be considered since the airfoil surface is ahead of the Mach cone originating at the rear source. Here

$$u_{-1} - u_{+1} \propto \cosh^{-1}\frac{x+1-my}{|y-m(x+1)|}$$

$$\propto \cosh^{-1}\frac{1}{m} \tag{21}$$

and the pressure over the root section is thus constant, as given by the Ackeret theory, but is altered in magnitude by the obliquity.

The oblique wing lying behind the Mach lines thus shows the Ackeret type of pressure distribution over the foremost section and a progressive change along the span from this distribution to the subsonic type of distribution. Since the subsonic type of distribution shows no pressure drag, there is a continuous falling off of the pressure drag with increasing distance from the root section. The pressure drag of the oblique wing thus arises chiefly on the foremost section, and it follows that the drag coefficient of the wing as a whole diminishes with increasing aspect ratio. It will be shown subsequently that the effect of cutting the wing off along a line y=Constant to produce a downstream tip causes a reduction of the pressure drag on the adjacent sections; and if the aspect ratio is sufficiently high, the pressure drag in the region of the downstream tip may actually be negative.

If the wing lies ahead of the Mach lines ($m>1.0$) the Ackeret type of pressure distribution occurs and a pressure drag arises over the whole length. In this case both u and w are constant over the beveled part at a distance from the origin.

[1] Similarly if $P_n(\xi)\, d\xi$ is taken as the chordwise distribution of vorticity,

$$u \propto P_n(x)$$
$$w \propto Q_n(x)$$
$$\propto \frac{dz}{dx}$$

The first of this series of airfoils is the camber shape curved to support a uniform load.

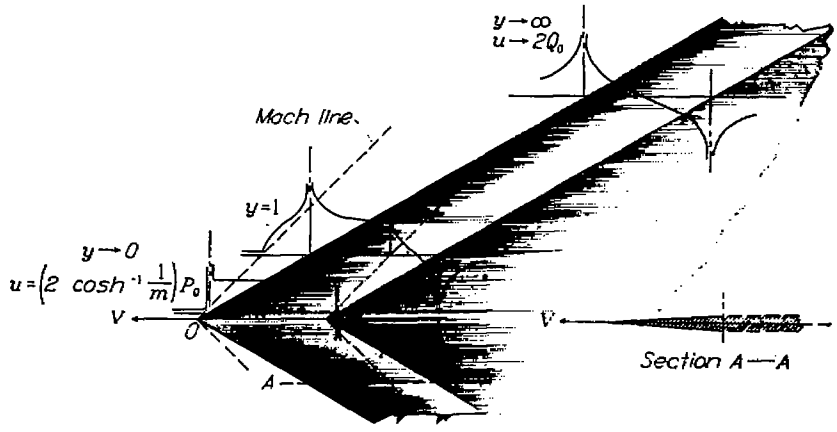

FIGURE 5.—Variation of pressure distribution along span of sweptback wing. m=tan 30°.

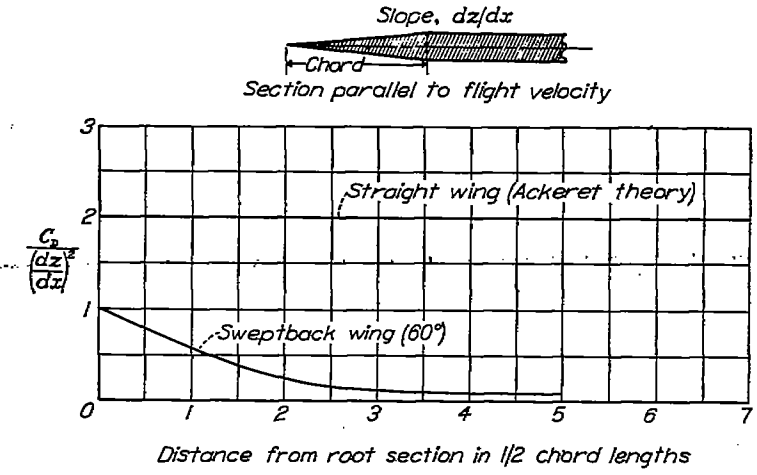

FIGURE 6.—Variation of drag coefficient with distance from root section for sweptback wing. Wedge section; M=1.4.

The treatment thus far applies to semi-infinite cylindrical wings having root sections near the origin. A complete sweptback wing may be obtained by the addition of a symmetrical or conjugate arrangement of source lines below the X-axis. Values of u for this conjugate arrangement may be denoted by $\bar{u}$. Figures 2 and 3 show $\bar{u}$ for a single inclined source and figure 5 shows calculated pressure distributions at several sections along the span for a complete sweptback airfoil having beveled sections. The addition of the conjugate source lines doubles the pressure at the root section, but this interference effect falls off rapidly along the span. It is noted that, as in figure 4, the most significant change in pressure distribution occurs along the expansion wave originating at the trailing edge of the root section. Figure 6 shows the variation in pressure drag along the span for this airfoil obtained by integrating the chordwise components of pressure at the different sections.

The addition of a reversed source-sink distribution having its origin displaced to a point 0_2 (see fig. 7) will show the effect of cutting the wing off in a direction parallel to the direction of flight. It will be evident that the effect of such a tip is characterized by the subtraction of the curves $\bar{u}$ and is limited to the area lying within the Mach cone which originates at the tip. It is interesting to note that pressure distributions of the Ackeret type, except reversed in sign, are added near the tip; hence, cutting the tip off in this manner reduces the drag of adjacent sections.

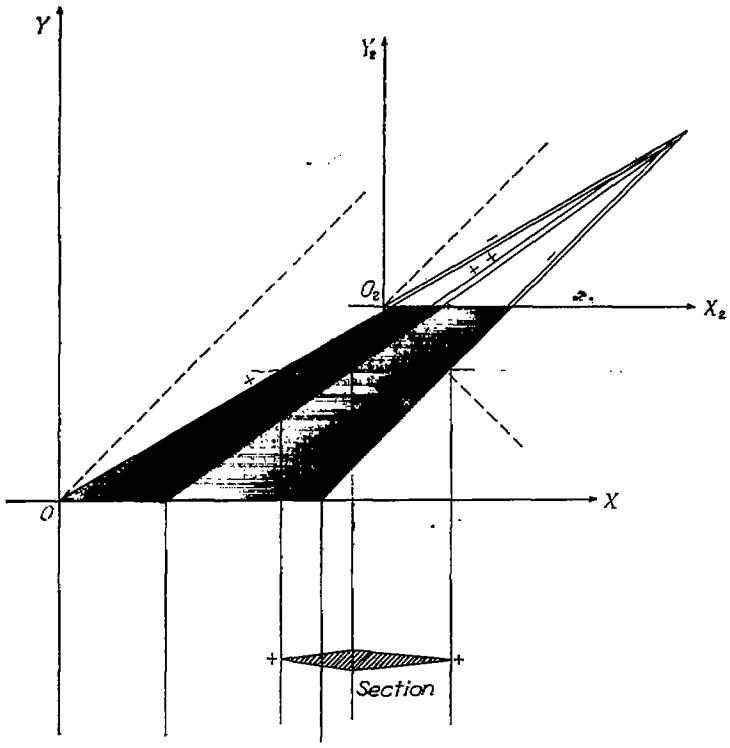

FIGURE 7.—Addition of reversed source-sink distribution to produce tip.

Figure 8 shows the pressure distributions over a rectangular airfoil having a leading edge at right angles to the flow. In the triangular area ahead of the Mach cones originating at the tips the pressure is constant, as given by the Ackeret theory, whereas behind these Mach cones the pressure drops sharply.

AIRFOIL OF BICONVEX SECTIONS

Curved surfaces require a continuous distribution of sources and sinks alined with the generators of the surface. Each elementary source line causes an infinitesimal change in direction of the surface and hence the slope at any point may be obtained by adding up the effects of all sources ahead of that point. Thus

$$\frac{dz}{dx}=\frac{\pi}{V}\int_{x_1}^{x}\frac{\sqrt{1-m^2}}{m}\frac{dI}{d\xi}d\xi \tag{22}$$

or

$$\frac{d^2z}{dx^2}=\frac{\pi}{V}\frac{\sqrt{1-m^2}}{m}\frac{dI}{dx}$$

For airfoils of constant chord, m will be a constant and the integrations can be performed without difficulty. The simplest case is that of constant curvature, which leads to profiles formed from circular arcs.

In order to obtain a biconvex profile, it is necessary to introduce finite sources of strength sufficient to form the desired angle of intersection of the arcs at the leading and trailing edges, together with a uniform distribution of sinks along the chord line between the two sources. These profiles thus require a uniform distribution of sources or sinks, which may be obtained by integrating the elementary solution for the line source (equation (6)). The resulting solution may be denoted by $\frac{1}{D}u$ and is, for $m<1$,

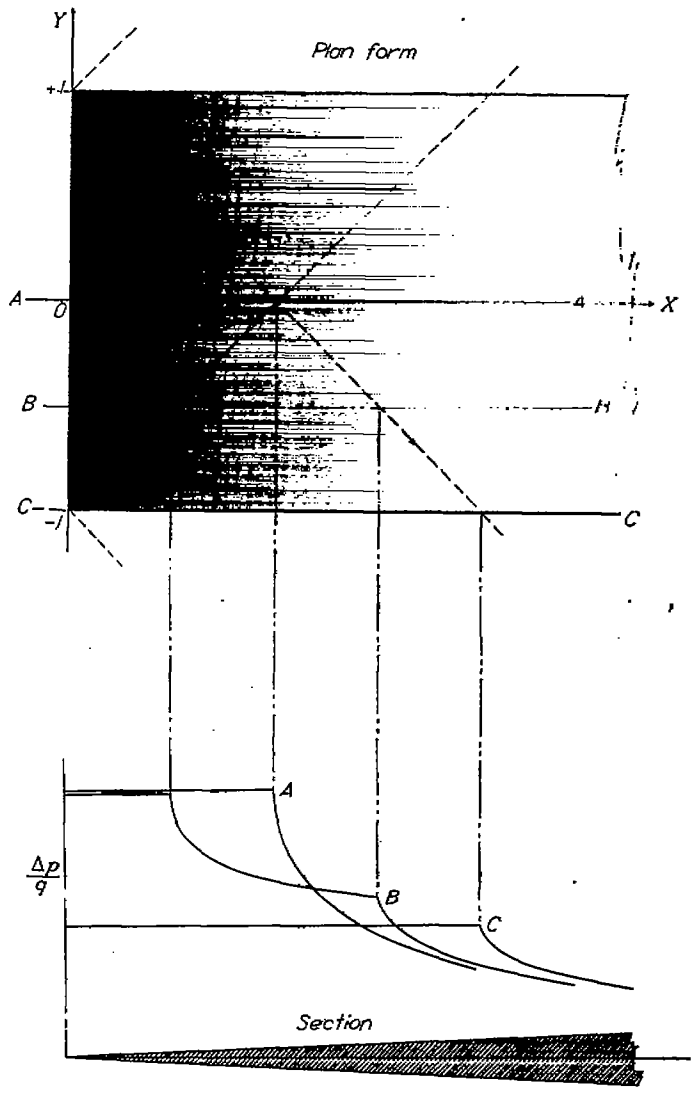

FIGURE 8.—Pressure distribution over airfoil of rectangular plan form.

$$\frac{\Delta p}{q}=\sin^{-1}\frac{1-y}{x}+\sin^{-1}\frac{1+y}{x}.$$

$$\frac{1}{D}u=I\int_{|y|}^{x}\cosh^{-1}\frac{\xi-my}{|y-m\xi|}d\xi$$

$$=I\left(\frac{\sqrt{1-m^2}}{m}y\cosh^{-1}\frac{x}{|y|}-\frac{1}{m}y'\cosh^{-1}\frac{x'}{|y'|}\right) \tag{23}$$

Inasmuch as the elementary solution u is of the form $f\left(\frac{x}{y}\right)$, the integrated solution appears in the form

$$\frac{1}{D}u=yg\left(\frac{x}{y}\right)$$

and will be conveniently represented by a curve typical of all spanwise stations, namely,

$$\frac{1}{yD}u=g\left(\frac{x}{y}\right)$$

For a closed profile intersecting the X-axis at the points ± 1 there is obtained

$$\Sigma u=u_{-1}+u_{+1}-y\left(\frac{1}{yD}u_{-1}-\frac{1}{yD}u_{+1}\right) \tag{24}$$

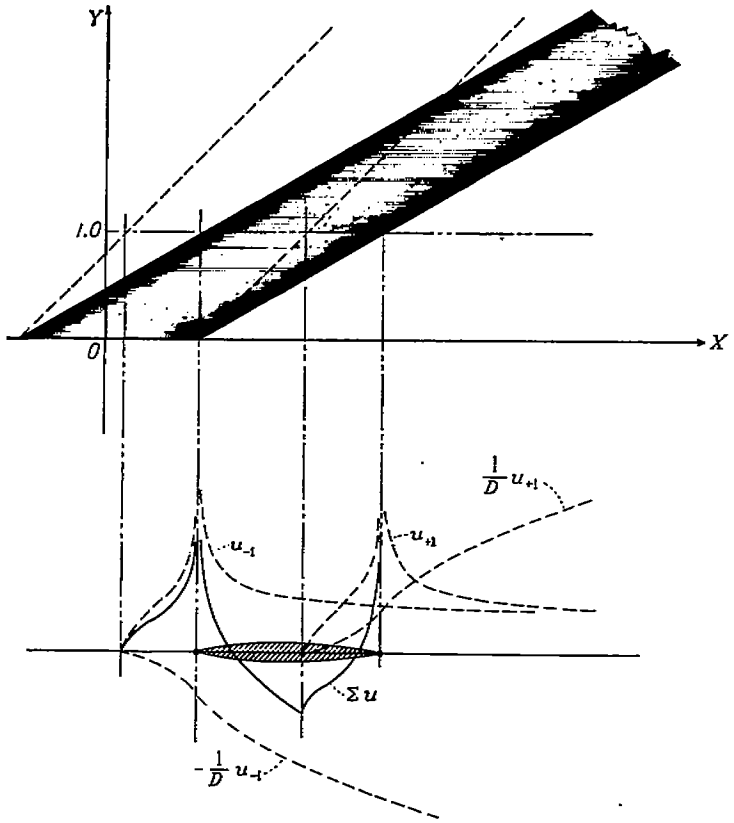

FIGURE 9.—Pressure distribution over wing of biconvex section. $\frac{\Delta p}{q}=\frac{2\Sigma u}{V}$.

This superposition may be accomplished conveniently by transposing and adding the typical curves u and $\frac{1}{yD}u$. (See fig. 9.)

It will be found that if m is less than 1.0 the velocity distribution approaches, with increasing distance from the root section, the form given by the subsonic-flow theory for an airfoil of biconvex section, that is,

$$\left.\begin{aligned} w &\propto P_1\left(\frac{y'}{m}\right) \\ u &\propto Q_1\left(\frac{y'}{m}\right) \end{aligned}\right\} \tag{25}$$

At the root section, however, the form is simply that given by the Ackeret theory for a straight airfoil although the values are reduced in magnitude by the factor $\frac{m}{\sqrt{1-m^2}}\cosh^{-1}\frac{1}{m}$.

The pressure distribution and the variation of drag along the span for the bilaterally symmetrical wing are shown in figures 10 and 11.

CONICAL SURFACES

For tapered airfoils both m and I will be functions of ξ. It is easily seen that closed surfaces can be obtained only if the relation between m and ξ is such that the line sources have a common point of intersection, as in figure 7. If this point is denoted by x_0, y_0

$$m=\frac{y_0}{x_0-\xi}$$

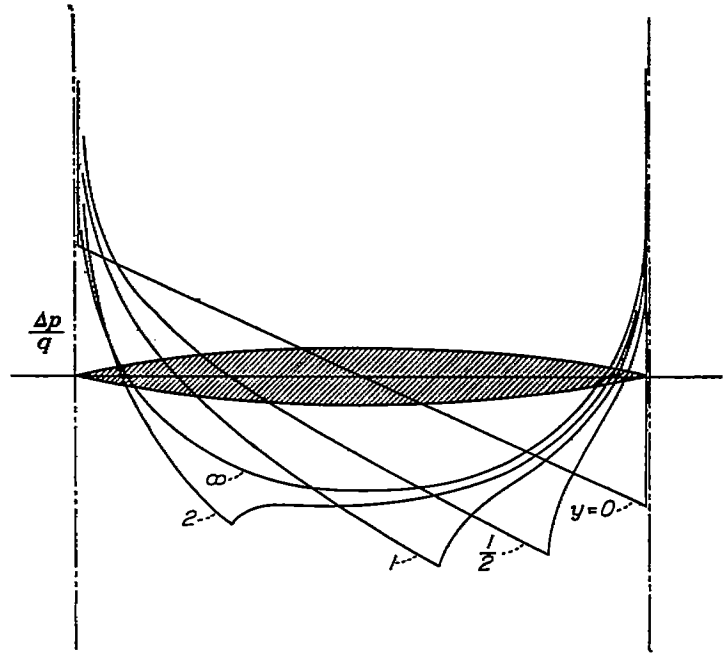

FIGURE 10.—Pressure distribution at different points along span. Biconvex wing.

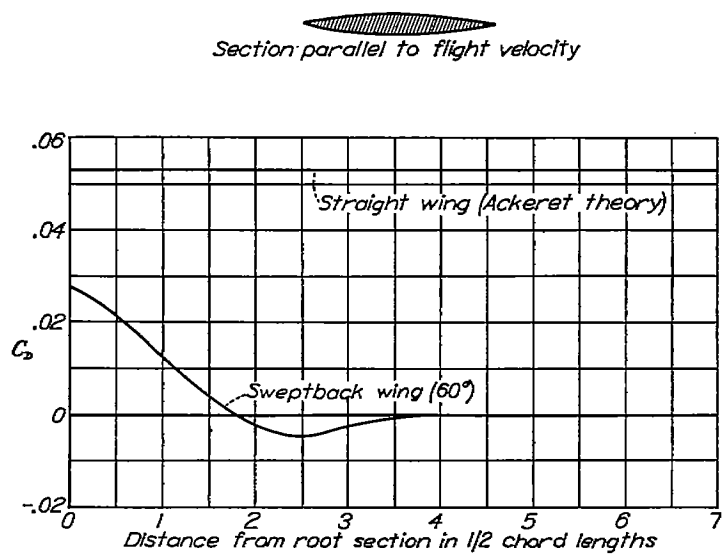

FIGURE 11.—Variation of drag coefficient with distance from root section for wings of biconvex section. $M=1.4$; $\frac{t}{c}=10$ percent.

The surface obtained is one generated by a line passing through the fixed point x_0, y_0 and hence is a conical surface.

The pressure over the tapered airfoil requires the integration of

$$u=\int_{\xi_1}^{x-y}\left[\cosh^{-1}\frac{x-\xi-my}{|y-m(x-\xi)|}\right]\frac{dI}{d\xi}d\xi$$

$$=\int_{\xi_1}^{x-y}u_t\frac{dI}{d\xi}d\xi$$

where ξ_1 is the location of the vertex of the airfoil and

$$\frac{dI}{d\xi}=\frac{V}{\pi}\frac{m}{\sqrt{1-m^2}}\frac{d^2z}{d\xi^2}$$

In conclusion it should be noted that the pressures have been derived for an airfoil transformed according to equations (2). The pressures at corresponding points of the original airfoil are to be obtained by dividing by M^2-1.

LANGLEY MEMORIAL AERONAUTICAL LABORATORY,
NATIONAL ADVISORY COMMITTEE FOR AERONAUTICS,
LANGLEY FIELD, VA., *May 23, 1946.*

APPENDIX

EVALUATION OF INTEGRAL OF EQUATION (8)

For $m<1.0$ the disturbance is zero outside the Mach cone and the range of integration should be extended only from $x_1=\sqrt{y^2+z^2}$ to x, that is,

$$\int_{-\infty}^{x} u\,dx=\int_{\sqrt{y^2+z^2}}^{x}\cosh^{-1}\frac{x'}{\sqrt{y'^2+z'^2}}\,dx \tag{A1}$$

(for unit source strength). Furthermore,

$$\frac{\partial}{\partial z}\int_{\sqrt{y^2+z^2}}^{x} u\,dx=\int_{\sqrt{y^2+z^2}}^{x}\frac{\partial u}{\partial z}\,dx \tag{A2}$$

since the integrand is zero at the lower limit. Now

$$\frac{\partial}{\partial z}\cosh^{-1}\frac{x'}{\sqrt{y'^2+z'^2}}=\frac{-x'z'\sqrt{1-m^2}}{(y'^2+z'^2)\sqrt{x'^2-y'^2-z'^2}} \tag{A3}$$

and hence the integral

$$w=\int_{\sqrt{y^2+z^2}}^{x}\frac{-x'z'\sqrt{1-m^2}}{(y'^2+z'^2)\sqrt{x'^2-y'^2-z'^2}}\,dx \tag{A4}$$

must be evaluated.

First it is noted that the integral vanishes with z except in the neighborhood of the Mach cone ($\sqrt{x'^2-y'^2-z'^2}=0$) and in the neighborhood of the line source ($y'=0$). Near the Mach cone $y'^2+z'^2\rightarrow x'^2$, so that

$$\int\frac{-x'z'dx}{(y'^2+z'^2)\sqrt{x'^2-y'^2-z'^2}}\rightarrow\int\frac{-z\,dx}{x'\sqrt{x^2-y^2-z^2}} \tag{A5}$$

Since the latter integral approaches zero with z, there is no contribution to equation (A4) in the region of the Mach cone. On the other hand, near the line source $y'\rightarrow 0$ and $\sqrt{x'^2-y'^2-z'^2}\rightarrow x'$; hence, as $z'\rightarrow 0$,

$$\int\frac{-x'z'dx}{(y'^2+z'^2)\sqrt{x'^2-y'^2-z'^2}}\rightarrow\int\frac{-z'}{y'^2+z'^2}\,dx$$

$$=\frac{1}{m}\tan^{-1}\frac{y'}{z'}+\text{Constant} \tag{A6}$$

The value of the integral changes from 0 to π in crossing over the line source at $y'=0$ and is positive or negative depending on whether z' approaches zero from the positive or negative side of the xy-plane. Hence

$$w=\pm\frac{\pi}{m}\sqrt{1-m^2}$$

If m is greater than 1.0,

$$u=\cos^{-1}\frac{x'}{\sqrt{y'^2+z'^2}} \tag{A7}$$

and the flow disturbance extends outside the Mach cone to a region bounded by plane waves extending from the line source and tangent to the Mach cone. (See fig. 12.) The equation of these planes can be easily shown to be $y'^2+z'^2=0$; hence for $m>1.0$ the lower limit of integration is given by

$$y'^2+z'^2=0$$

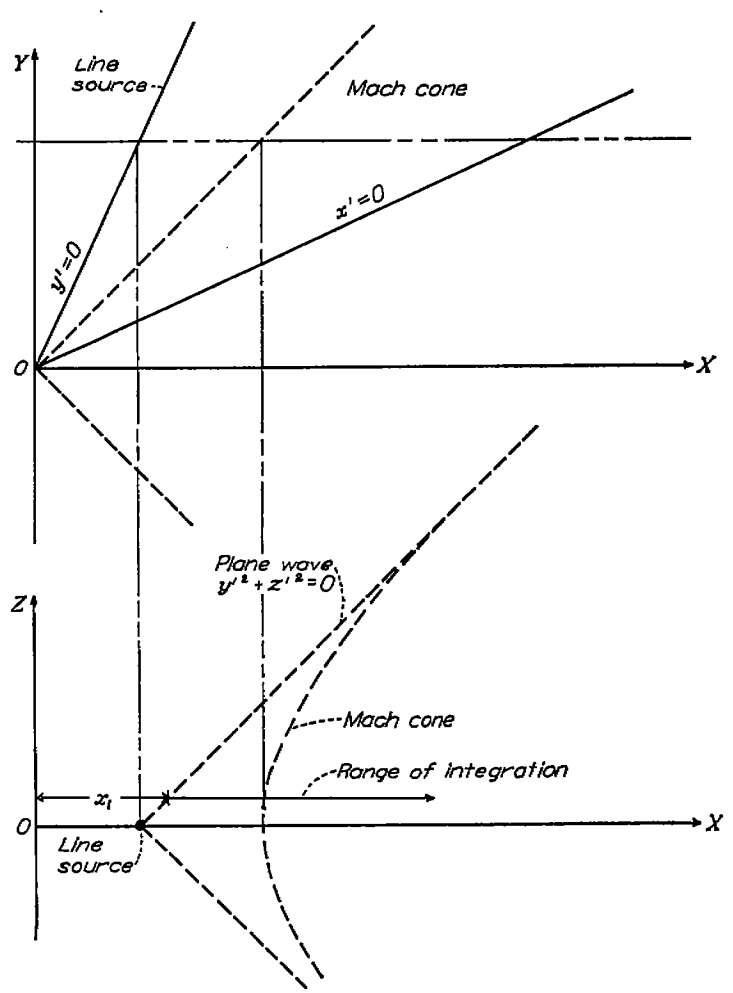

FIGURE 12.—Information pertinent to evaluation of equation (8) for $m>1.0$. (See appendix.)

or

$$x_l=\frac{y-\sqrt{m^2-1}\,z}{m} \tag{A8}$$

Then

$$\frac{\partial}{\partial z}\int_{x_l}^{x} u\,dx=\frac{\partial}{\partial z}\int_{x_l}^{x}\cos^{-1}\frac{x'}{\sqrt{y'^2+z'^2}}\,dx \tag{A9}$$

In this case u does not go to zero at the lower limit but is equal to π. In all other regions, however, the integral approaches zero uniformly with z as in the preceding case; hence

$$\begin{aligned} w&=\frac{\partial}{\partial z}\int_{x_l}^{x} u\,dx \\ &=u_l\frac{\partial x_l}{\partial z} \\ &=\pm\frac{\pi}{m}\sqrt{m^2-1} \end{aligned} \tag{A10}$$

as before.

REFERENCES

1. Jones, Robert T.: Wing Plan Forms for High-Speed Flight. NACA TN No. 1033, 1946.
2. Ackeret, J.: Air Forces on Airfoils Moving Faster Than Sound. NACA TM No. 317, 1925.
3. Jones, Robert T.: Properties of Low-Aspect-Ratio Pointed Wings at Speeds below and above the Speed of Sound. NACA Rep. No. 835, 1946.
4. Busemann, Adolf: Infinitesimale kegelige Überschallströmung. Sonderdruck aus dem Jahrb. 1942/43 der Deutschen Akademie der Luftfahrtforschung. (Available as NACA TM No. 1100, 1947.)
5. Puckett, Allen E.: Supersonic Wave Drag of Thin Airfoils. Jour. Aero. Sci., vol. 13, no. 9, Sept. 1946, pp. 475–484.
6. Prandtl, L.: General Considerations on the Flow of Compressible Fluids. NACA TM No. 805, 1936.
7. Von Kármán, Theodor, and Moore, Norton B.: Resistance of Slender Bodies Moving with Supersonic Velocities, with Special Reference to Projectiles. Trans. A. S. M. E., vol. 54, no. 23, Dec. 15, 1932, pp. 303–310.
8. Jahnke, Eugene, and Emde, Fritz: Tables of Functions with Formulae and Curves. Rev. ed., Dover Publications (New York), 1943, pp. 107–117.

842951—50——20