MAY 16 1946

# NATIONAL ADVISORY COMMITTEE FOR AERONAUTICS

TECHNICAL NOTE

No. 1058

## STRAIN MEASUREMENTS AND STRENGTH TESTS OF 25-INCH DIAGONAL-TENSION BEAMS OF 75S-T ALUMINUM ALLOY

By James P. Peterson

Langley Memorial Aeronautical Laboratory
Langley Field, Va.

Washington
May 1946

NACA LIBRARY
LANGLEY MEMORIAL AERONAUTICAL
LABORATORY
Langley Field, Va.

3 1176 01433 3349

NATIONAL ADVISORY COMMITTEE FOR AERONAUTICS

TECHNICAL NOTE NO. 1058

# STRAIN MEASUREMENTS AND STRENGTH TESTS OF 25-INCH DIAGONAL-TENSION BEAMS OF 75S-T ALUMINUM ALLOY

By James P. Peterson

## SUMMARY

A series of diagonal-tension beams were tested to determine the accuracy of previously published design charts and formulas for beams of 24S-T aluminum alloy when used to analyze beams of 75S-T aluminum alloy. Strain measurements were made to determine the stresses in the uprights of the beams and to determine the ultimate stresses that could be developed in the uprights. The predicted stresses were in fair agreement with the experimental stresses or were conservative. The ultimate stresses that could be developed in the beams were in agreement with stresses predicted by previously published formulas except for the stresses developed in the uprights, which failed by forced twisting. For these uprights, the developed stresses were greater than those given by previously published formulas derived from tests of beams of 24S-T aluminum alloy.

## INTRODUCTION

A semiempirical theory for the action of shear webs in incomplete diagonal tension with design charts that facilitate the use of the theory and design formulas for estimating allowable stresses is presented in reference 1. More refined design charts and design formulas are given in reference 2. Empirical coefficients obtained from tests of beams of 24S-T aluminum alloy are employed in the design charts and in some of the design formulas. These coefficients may depend upon certain material properties and, because the new high-strength 75S-T aluminum alloy is now being used in aircraft structures, it was desirable to test beams of 75S-T aluminum alloy in order to determine whether the charts and formulas of reference 2 were applicable to these beams. Such beams were tested in the Langley structures research laboratory and the results are herein presented.

## SYMBOLS

$A_U$ cross-sectional area of upright (core area of Alclad uprights), square inches

$C_R$ rivet factor $\left(1 - \frac{\text{Rivet diameter}}{\text{Rivet pitch}}\right)$

$C_1$, $C_2$ stress factors

$P$ applied load, kips

$d$ spacing of uprights, inches

$h$ depth of beam, measured from back of top flange to back of bottom flange, inches

$h_e$ depth of beam between centroids of flanges, inches

$k$ diagonal-tension factor

$t$ thickness of web (core thickness of Alclad web), inches

$t_U$ thickness of uprights (core thickness of Alclad uprights), inches

$\rho$ radius of gyration of cross section of upright with respect to centroidal axis parallel to web, inches

$\sigma$ normal stress in web, ksi

$\sigma_U$ compressive stress in upright caused by diagonal tension, ksi

$\tau$ nominal shear stress in web, ksi

$\omega d$ parameter of flange flexibility

Subscripts:

e effective

eq equivalent

all allowable

cr critical

cy compressive yield

ty tensile yield

ult ultimate

## TEST SPECIMENS

The test specimens consisted of eight beams of the general dimensions shown in figure 1(a). Detailed dimensions for each beam are given in table 1, and dimensions of the cross section of the uprights for each beam are given in figure 1(b). The web and uprights were fastened to the flanges as diagrammed in figure 1(a) for the beams with single uprights. For the beams with double uprights, the web was placed between the flange angles and the uprights were joggled at each flange. The webs and the intermediate uprights were of Alclad 75S-T aluminum alloy, and the flanges and the loaded uprights were of 24S-T aluminum alloy.

The upright-to-web fasteners were $\frac{1}{8}$-inch A17S-T aluminum-alloy rivets. For the single-upright beams, brazier-head rivets spaced at $\frac{5}{8}$ inch and countersunk and flush on the side of the upright were used. Round-head rivets were used on the double upright beams. These rivets were spaced at $2\frac{1}{2}$ inches on beam 4 and at 2 inches on beams 6 and 7. The web was fastened to the flanges by No. 10 socket-head cap screws of steel alloy spaced 1 inch in two rows. The uprights were fastened to each flange by two No. 10 socket-head cap screws of steel alloy.

## PROPERTIES OF MATERIALS

Compressive stress-strain curves based on areas of core plus clad materials for the 75S-T aluminum alloy used in the uprights of the test beams are given in figure 2.

These curves were obtained from tests of single-thickness specimens of the upright material in the with-grain direction. The tests were made in a compression fixture of the Montgomery-Templin type, which provides lateral support to the specimens through closely spaced rollers. (See reference 3 for further details of testing techniques.) Because the secondary modulus of elasticity (slope of second straight-line portion of the curves) is about 0.92 times the primary modulus (slope of first straight-line portion of the curve) for these curves, the effective area was taken as 0.92 of the total area for all calculations involving the area of the uprights and the webs. The yield stress based on the total area varied from 64.8 ksi (beam 7) to 71.7 ksi (beam 2). (See fig. 2.)

Tensile properties of the web material based on areas of core plus clad material for some of the beams are tabulated in table 2. These results were obtained from tests of standard tensile specimens and from tests of special tensile specimens to estimate the effect of holes on the strength of the webs. The longitudinal axis of both types of specimens was at 45° to the grain of the material. The special tensile specimens were tested only for the beams with single uprights. These specimens had parallel sides and a width of $\frac{5}{8}$ inch with a $\frac{1}{8}$-inch hole in the center of each specimen. These dimensions were chosen because the upright-to-web rivets for the single-upright beams were $\frac{1}{8}$-inch rivets spaced at $\frac{5}{8}$ inch.

## TEST PROCEDURE

The specimens were tested as cantilever beams. One end of the specimens was fastened to a heavy steel structure with steel angles and the load was applied to the other end with a hydraulic jack. In order to prevent lateral deflection or twisting of the beams, lateral support was provided by parallel-motion guides between the flanges of the test beams and an auxiliary truss work.

Strain measurements were made on the two center uprights of beam 1 and on the three center uprights of the rest of the beams by Baldwin Southwark SR-4 electrical strain gages, type A-1. The strain gages were spaced at

2 inches on beams 6 and 7 and at $2\frac{1}{2}$ inches on the other beams. All of these strain gages were placed on the inside face of the leg attached to the web. Strain gages were used in pairs on opposite sides of the beams for the double-upright beams, and the strain readings from opposite gages were averaged to cancel local bending effects. This procedure was not possible in measuring strains in single uprights; therefore all the strains measured in the uprights at a given load were averaged to obtain a strain that was reasonably free of local bending effects.

Thicknesses of the web and uprights were obtained by micrometer measurement and are accurate to about 0.0001 inch. Cross-sectional areas were obtained by weighing and are believed to be accurate to 1 percent. The applied loads are accurate to about 1 percent, and the strain measurements are believed to be accurate to about 2 percent.

## TEST RESULTS

### Stresses in the Uprights

The strains measured at various loads were converted to stresses by use of the stress-strain curves of figure 2. The resulting load-stress plots are given in figure 3. Calculated stresses from reference 2 at various loads are also shown. For the single-upright beams, the calculated and experimental stresses given in figure 3 are stresses at the plane of measured stress; that is, at the inside face of the leg attached to the web. The average measured stresses and the range of measured stresses are given. The wide scatter of test data at a given load is caused by waving of the upright with the buckles in the web.

For the double-upright beams, the average measured stress and the maximum measured stress at various loads are given in figure 3. The maximum measured stresses occur near the center of the uprights and should probably be given more weight in a comparison between experimental and calculated stresses than the average stresses.

The stresses predicted by the design charts of reference 2 are in fair agreement with the experimental stresses or are conservative. (See fig. 3.) The predicted stresses

for beams 4, 5, and 8 are quite conservative, and the predicted stresses for the other five beams are in fair agreement with the experimental stresses. Similar results have been observed from tests of beams of 24S-T aluminum alloy (see reference 2); from the present tests, therefore, it appears that the design charts of reference 2 can be used to predict stresses in beams of 75S-T aluminum alloy with about the same accuracy as is achieved when the charts are used to predict stresses in beams of 24S-T aluminum alloy.

## Failure of the Uprights

Seven of the beams failed in the uprights. Of the three beams with double uprights, two (beams 4 and 7) failed by column action, and the other one (beam 6) failed by twisting forced upon the uprights by folds in the web. All the failures of the single uprights were caused by forced twisting. From the five failures caused by forced twisting, it appears that uprights of 75S-T aluminum alloy fail at a greater stress than uprights of 24S-T aluminum alloy. The test results indicate that the stress at failure can be predicted by the formulas

$$\sigma_{U_{all}} = 16 \frac{t_U}{t} \text{ (ksi)} \tag{1}$$

$$\sigma_{U_{all}} = 13.5 \frac{t_U}{t} \text{ (ksi)} \tag{1a}$$

where formula (1) corresponds to formula (14) of reference 2, which represents the average of test data for uprights of 24S-T aluminum alloy, and formula (1a) corresponds to formula (14a) of reference 2, which is recommended for design of uprights of 24S-T aluminum alloy. Formulas (1) and (1a) are based on the meager evidence given by the five test beams for which the uprights failed by forced twisting. These data may not be sufficient to define the failing stress; hence, more tests may indicate that the formulas should be modified.

The ratios of test ultimate load to calculated ultimate load are given in table 3. The predicted ultimate loads for beams for which the uprights failed by forced twisting are based on formula (1). The predicted ultimate loads for the beams for which the uprights failed by column action were computed by the method given in reference 2. Inspection of table 3 shows that the ratio of

test load to predicted load ranges from 0.91 to 1.09 for the upright failures caused by forced twisting. Use of the more conservative formula (1a), which corresponds to the formula recommended for design in reference 2, would have resulted in conservative predictions in all instances. The predicted failing loads for the beams for which the uprights failed by column action are 9 and 11 percent conservative for beams 4 and 7, respectively.

The ratios of test ultimate load to the ultimate load as calculated by formulas of references 4 and 5 are given in table 4. The ratios given in table 3 are repeated in this table. Inspection of table 4 shows that the formula of reference 4 gives predictions that are up to 37 percent unconservative (beam 2). This formula uses the moment of inertia of the upright about the axis of its cross section parallel to the web as a parameter of upright design; and, as stated in reference 6, the use of this parameter is questionable because observation of upright failures indicates that single uprights do not usually fail as columns. Observation also indicates that some double uprights do not fail as columns. The formulas of reference 5 give predictions for the test beams that are more satisfactory. (See table 4.)

## Web Failure of Beam 8

The failure of beam 8 was in the web. The load at which web failure would occur was estimated from the formulas

$$\bar{\tau}_{eq} = \bar{\tau}\left(1 + kC_1\right) \frac{1 + kC_2}{C_R} \tag{2}$$

and

$$\bar{\tau}_{eq_{all}} = \bar{\tau}_{ult} - k\left(\bar{\tau}_{ult} - \frac{1}{2}\sigma_{ult}\right) \tag{3}$$

Formulas (2) and (3) are given in reference 2 as formulas (8) and (12) respectively. Typical material properties obtained from reference 7 were used in formula (3), and the resulting allowable stress was corrected to actual material properties by multiplying the resulting allowable stress by the ratio of actual tensile strength of the web

material with holes (table 2) to the value of $\sigma_{ult}$ taken from reference 7. The value of $\tau_{eq}$ obtained from formula (2) was multiplied by 0.92 so that both $\tau_{eq}$ and $\tau_{eq_{all}}$ would be based on the total area of the Alclad sheet. The ratio of test load to predicted load is 0.97. (See table 3.)

## CONCLUSIONS

From the results of tests of the eight diagonal-tension beams of 75S-T aluminum alloy, the following conclusions were drawn:

1. The stresses in the uprights of the test beams were in fair agreement with or somewhat less than the stresses predicted by the design charts previously published for 24S-T aluminum alloy.

2. The loads at which web failure would occur or at which the uprights would fail by column action agreed with predictions based on previously published formulas within about ±10 percent.

3. The stress at which the uprights failed by forced twisting was about 28 percent greater than the allowable stress given by the experimental formulas derived from test of beams of 24S-T aluminum alloy.

Langley Memorial Aeronautical Laboratory
National Advisory Committee for Aeronautics
Langley Field, Va., January 28, 1946

## REFERENCES

1. Kuhn, Paul: Investigations on the Incompletely Developed Plane Diagonal-Tension Field. NACA Rep. No. 697, 1940.

2. Kuhn, Paul, and Chiarito, Patrick T.: The Strength of Plane Web Systems in Incomplete Diagonal Tension. NACA ARR, Aug. 1942.

3. Kotanchik, Joseph N., Woods, Walter, and Weinberger, Robert A.: Investigation of Methods of Supporting Single-Thickness Specimens in a Fixture for Determination of Compressive Stress-Strain Curves. NACA RB No. L5E15, 1945.

4. Hoose, Earl: Engineering Development Work of the Consolidated Vultee Aircraft Corporation. Aero. Eng. Rev., vol. 2, no. 11, Nov. 1943, p. 31.

5. Sechler, Ernest E., and Dunn, Louis G.: Airplane Structural Analysis and Design. John Wiley & Sons, Inc., 1942, p. 251.

6. Peterson, James P.: Strain Measurements and Strength Tests of 25-inch Diagonal-Tension Beams with Single Uprights. NACA ARR No. L5J02a, 1945.

7. Anon.: Alcoa Aluminum and Its Alloys. Aluminum Co. of Am. 1944a.

TABLE 1.- PROPERTIES OF TEST BEAMS

[$h = 25.5$ in.; $h_e = 24.3$ in.]

| Beam | d (in.) | $\frac{d}{h}$ | t (in.) (a) | Uprights | | $A_U$ (sq in.) (b) | $\frac{A_U}{dt}$ | $\frac{A_{U_e}}{dt}$ | ρ (in.) | Flanges 2 Ls (in.) | ωd |
|---|---|---|---|---|---|---|---|---|---|---|---|
| | | | | Cross section | Nominal size (in.) | | | | | | |
| 1 | 20 | 0.78 | 0.0194 | Z | $\frac{3}{4} \times 1\frac{1}{2} \times \frac{3}{4} \times 0.040$ | 0.0968 | 0.249 | 0.0840 | 0.541 | $2 \times 2 \times \frac{1}{4}$ | 2.78 |
| 2 | 10 | .39 | .0192 | Z | $\frac{3}{4} \times 1\frac{1}{2} \times \frac{3}{4} \times 0.040$ | .0993 | .517 | .1800 | .556 | $2 \times 2 \times \frac{3}{16}$ | 1.48 |
| 3 | 10 | .39 | .0363 | Z | $\frac{3}{4} \times 1\frac{1}{2} \times \frac{3}{4} \times 0.040$ | .0992 | .273 | .0955 | .556 | $2 \times 2 \times \frac{1}{4}$ | 1.62 |
| 4 | 10 | .39 | .0190 | 2 Ls | $\frac{11}{16} \times \frac{17}{32} \times 0.064$ | .1250 | .659 | .6590 | .231 | $2 \times 2 \times \frac{3}{16}$ | 1.48 |
| 5 | 10 | .39 | .0188 | L | $1 \times \frac{3}{4} \times 0.064$ | .0935 | .496 | .2370 | .318 | $2 \times 2 \times \frac{1}{4}$ | 1.37 |
| 6 | 15 | .59 | .0272 | 2 Ls | $\frac{5}{8} \times \frac{5}{8} \times 0.051$ | .0984 | .242 | .2420 | .283 | $2 \times 2 \times \frac{3}{16}$ | 2.43 |
| 7 | 15 | .59 | .0279 | 2 Ls | $\frac{5}{8} \times \frac{17}{32} \times 0.051$ | .0920 | .220 | .2200 | .221 | $2 \times 2 \times \frac{3}{16}$ | 2.44 |
| 8 | 10 | .39 | .0189 | L | $1\frac{1}{8} \times 1 \times 0.081$ | .1400 | .741 | .3670 | .359 | $2 \times 2 \times \frac{1}{4}$ | 1.39 |

[a]Thicknesses given are 0.92 of the thicknesses of Alclad sheet.
[b]Areas given are 0.92 of the areas of Alclad uprights.

NATIONAL ADVISORY COMMITTEE FOR AERONAUTICS

TABLE 2.- PROPERTIES OF WEB MATERIALS AT 45° TO GRAIN

(BASED ON AREA OF CLAD PLUS CORE MATERIALS)

| Beam | $\sigma_{ty}$ (ksi) (a) | $\sigma_{ult}$ (no holes) (ksi) (a) | $\sigma_{ult}$ (holes) (ksi) (b) | $\frac{\sigma_{ult}\ (\text{no holes})}{\sigma_{ult}\ (\text{holes})}$ |
|---|---|---|---|---|
| 1 | 63.8 | 75.5 | 75.3 | 1.00 |
| 2 | 63.8 | 75.5 | 76.0 | 1.00 |
| 3 | 67.8 | 78.9 | 78.4 | 1.01 |
| 4 | 63.8 | 74.8 | ------- | ---------- |
| 5 | 64.9 | 77.3 | 74.0 | 1.04 |
| 8 | 64.8 | 76.2 | 76.2 | 1.00 |

[a]From standard tensile specimens.

[b]From parallel-sided tensile specimens with central hole. Stress is based on net area. Strengths given are average for two specimens; maximum deviation from average was 2 percent.

NATIONAL ADVISORY
COMMITTEE FOR AERONAUTICS

TABLE 3.- SUMMARY OF CALCULATED AND EXPERIMENTAL RESULTS

| Beam | Calc. $\tau_{cr}$ (ksi) (a) | $P_{ult}$ (kips) | Calc. $P_{ult}$ (kips) | $\frac{P_{ult}}{h_e t}$ | Failure (actual and predicted) | $\frac{P_{ult}}{\text{Calc.}P_{ult}}$ | Alternate margin (percent) (b) | Alternate margin (percent) (c) |
|---|---|---|---|---|---|---|---|---|
| 1 | 0.101 | 6.7 | 6.6 | 14.2 | Forced twisting | 1.02 | 73 | --------- |
| 2 | .264 | 9.5 | 9.0 | 20.3 | Forced twisting | 1.06 | 64 | --------- |
| 3 | .942 | 14.8 | 13.6 | 16.8 | Forced twisting | 1.09 | 123 | --------- |
| 4 | .402 | 14.3 | 13.1 | 31.0 | Column action | 1.09 | 17 | 72 |
| 5 | .253 | 13.5 | 13.4 | 29.6 | Forced twisting | 1.01 | 10 | --------- |
| 6 | .345 | 11.4 | 12.5 | 17.2 | Forced twisting | .91 | 60 | 14 |
| 7 | .367 | 10.5 | 9.5 | 15.5 | Column action | 1.11 | 119 | 32 |
| 8 | .254 | 14.2 | 14.7 | 31.0 | Web | .97 | 28 | --------- |

[a]Critical shear stresses are based on method of reference 2.

[b]Predicted margin against web failure on beams where uprights failed or against upright failure where webs failed.

[c]Predicted margin against failure by column action on beams where uprights failed by forced twisting, or against forced twisting failure where uprights failed by column action.

NATIONAL ADVISORY
COMMITTEE FOR AERONAUTICS

TABLE 4.- RATIOS OF TEST ULTIMATE LOAD TO CALCULATED ULTIMATE LOAD FOR TEST BEAMS WITH UPRIGHT FAILURES

| Beam | $\frac{P_{ult}}{Calc.P_{ult}}$ | | |
|---|---|---|---|
| | Table 3 | Reference 4 | Reference 5 |
| 1 | 1.02 | 0.67 | 0.96 |
| 2 | 1.06 | .63 | 1.07 |
| 3 | 1.09 | .68 | 1.30 |
| 4 | 1.09 | 1.48 | 1.08 |
| 5 | 1.01 | 1.26 | 1.15 |
| 6 | .91 | 1.15 | 1.14 |
| 7 | 1.11 | 1.24 | 1.05 |

NATIONAL ADVISORY
COMMITTEE FOR AERONAUTICS

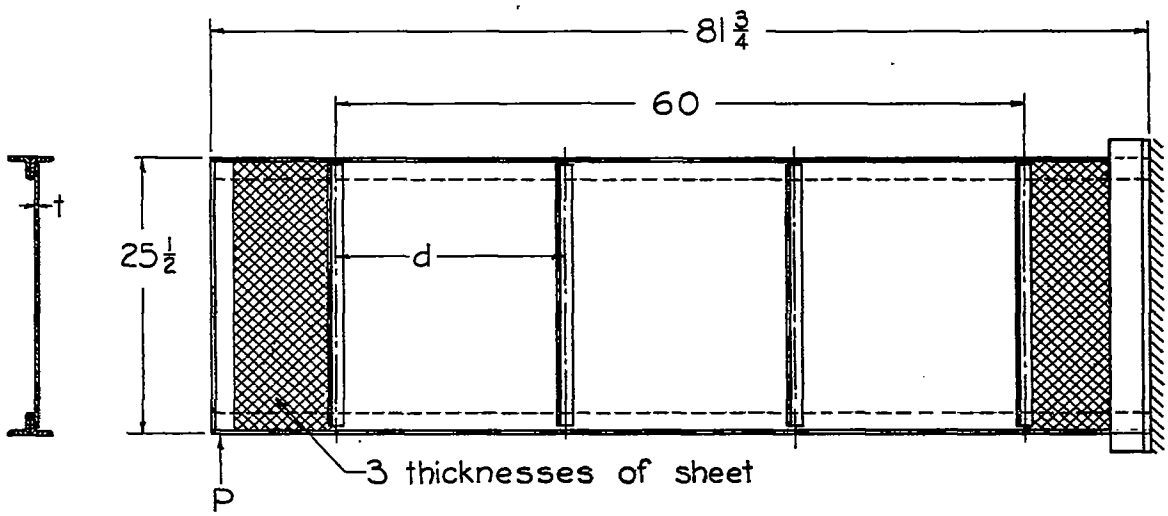


(a) General dimensions of test beams.

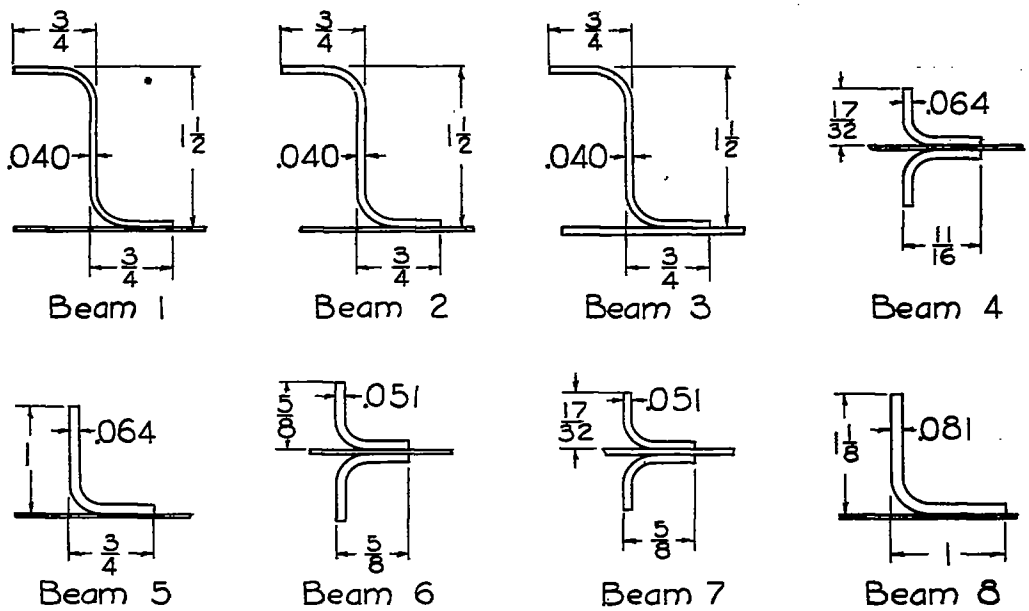


(b) Nominal dimensions of uprights.

NATIONAL ADVISORY COMMITTEE FOR AERONAUTICS

Figure 1.- Dimensions of test beams and uprights.

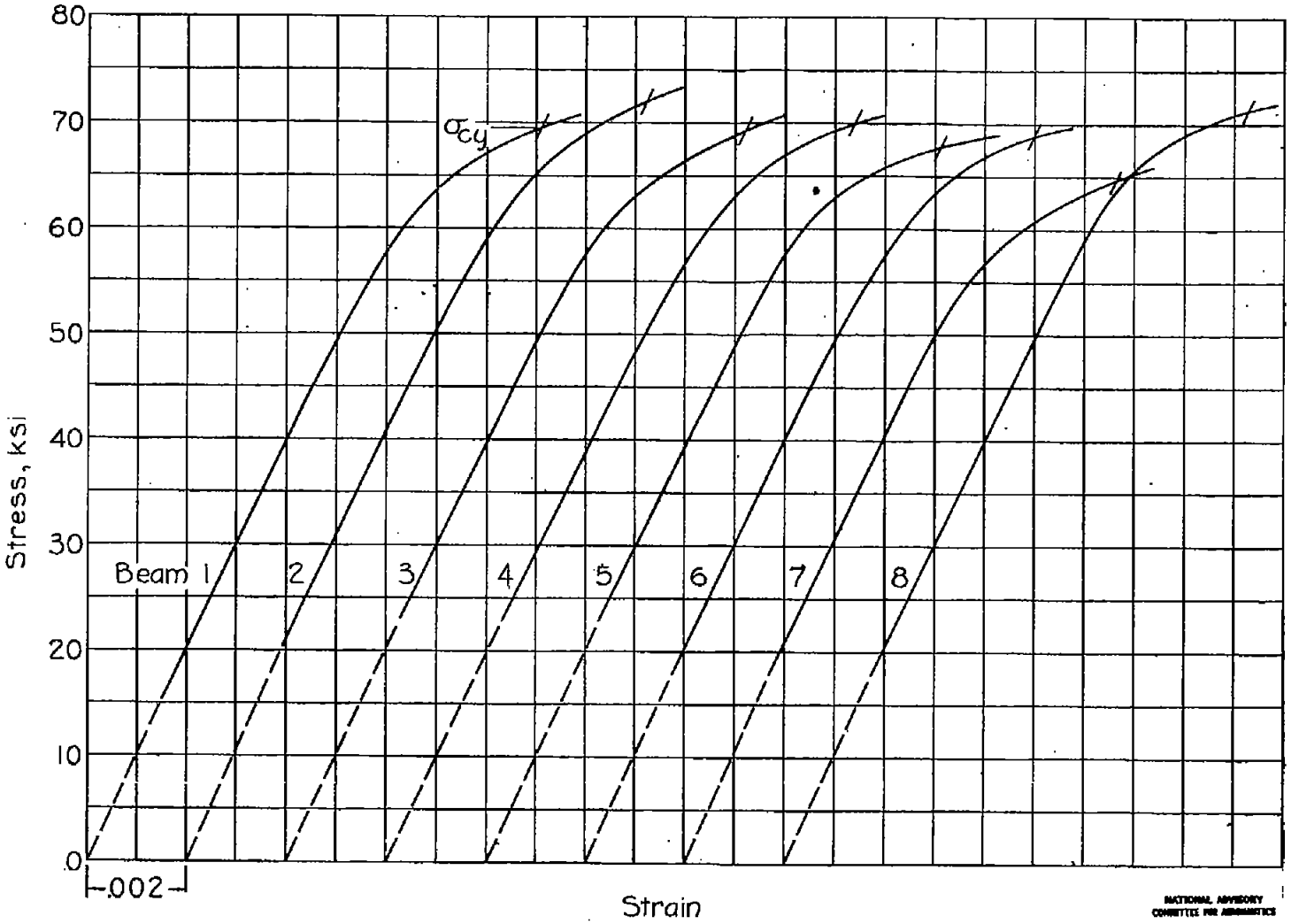


Figure 2.-Compressive stress-strain curves for 75S-T aluminum alloy used in uprights of test beams. (Stresses are based on area of clad plus core materials.)

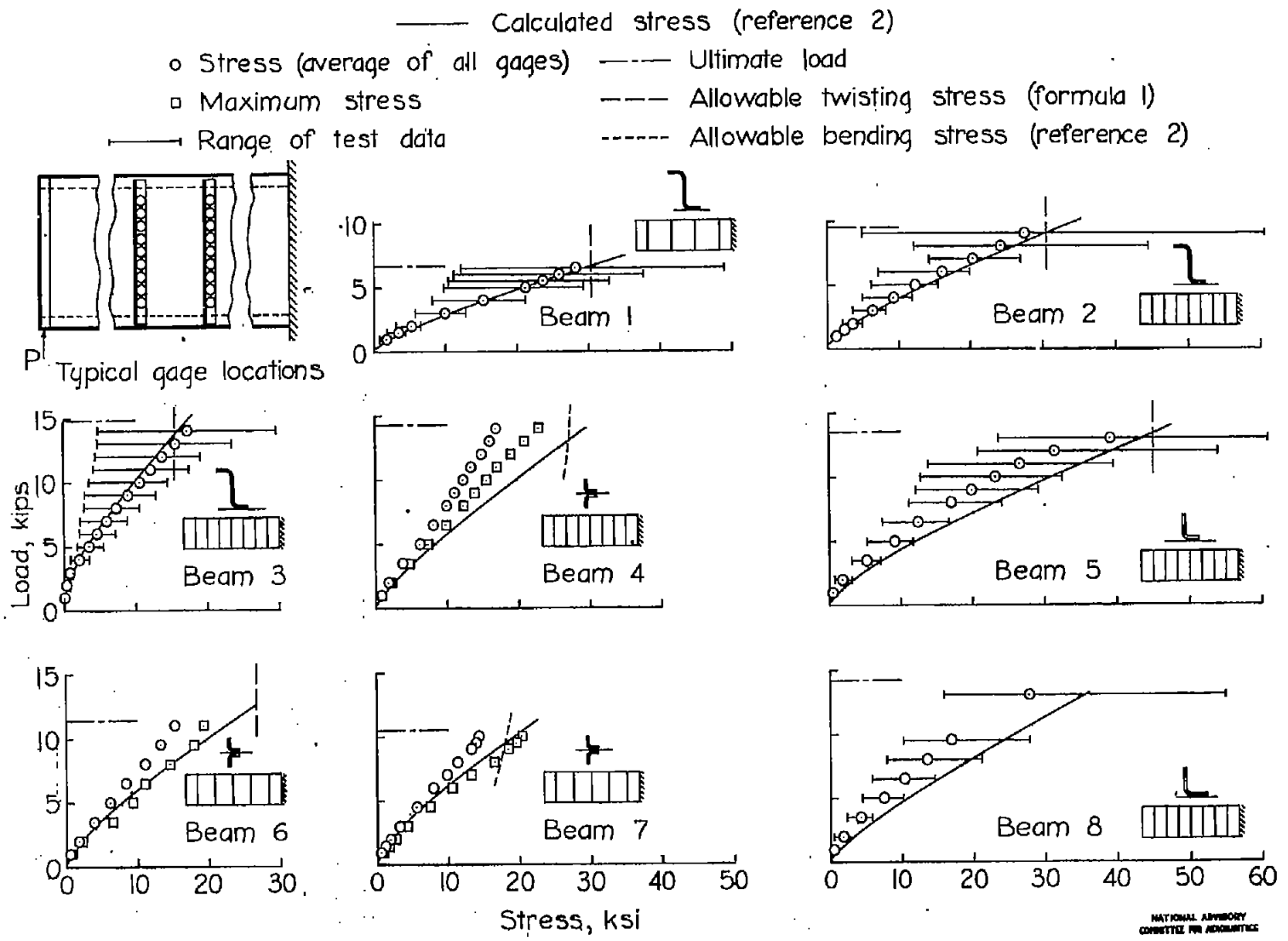


Figure 3.- Stresses in the uprights of test beams.