MAR 12 1947

NATIONAL ADVISORY COMMITTEE FOR AERONAUTICS

6410
1185
c. 1

TECHNICAL NOTE

No. 1096

ON SUPERSONIC AND PARTIALLY SUPERSONIC FLOWS

By Stefan Bergman
Brown University

N A C A LIBRARY
LANGLEY MEMORIAL AERONAUTICAL
LABORATORY
Langley Field, Va.

Washington
December 1946

NASA Technical Library
3 1176 01433 3141

NATIONAL ADVISORY COMMITTEE FOR AERONAUTICS

TECHNICAL NOTE NO. 1096

ON SUPERSONIC AND PARTIALLY SUPERSONIC FLOWS

By Stefan Bergman

SUMMARY

The present paper is one of a series of papers to extend the analytical methods used so successfully in the theory of an incompressible fluid to the case of a compressible fluid.

A stream function of an irrotational flow of an incompressible fluid satisfies the Laplace equation and, conversely, the imaginary part of an arbitrary analytic function of a complex variable can be considered as the stream function of a possible flow; many results of the highly developed theory of analytic functions can thus be interpreted as theorems on the motion of an incompressible fluid.

By using the hodograph method (introduced in the theory of compressible fluids by Chaplygin) a formula had previously been obtained for the stream function of a possible subsonic compressible flow in terms of an arbitrary analytic function of a complex variable; procedures for using some methods and techniques of the theory of analytic functions in the theory of subsonic flows have likewise been indicated, and, as a consequence, new flow patterns have been obtained. These flow patterns include examples of flows around symmetric and nonsymmetric obstacles, under the assumption of the true pressure-density relation, $p=\sigma\rho^k$, σ and k being constants.

In this paper the foregoing results are improved and completed. A formula (analogous to that for subsonic flows) is derived, which represents a stream function of a possible supersonic flow in terms of two arbitrary differentiable functions of one real variable. Finally, some instances are discussed in which flow pattern defined in two neighboring parts of the plane can be combined into one flow pattern defined in the combined domain. This last method leads, in some instances, to partially supersonic flows.

INTRODUCTION

The development of research in compressible fluid theory has made it desirable to have adequate mathematical tools for dealing with problems of compressible flows. One of the reasons for the success of mathematical methods in the study of two-dimensional irrotational steady flows of an incompressible fluid is based on the fact that it is possible to represent the stream function of such a flow as the imaginary part of an analytic function of a complex variable. As a consequence, various results in the highly developed theory of analytic functions can be applied to yield solutions of problems in hydrodynamics.

In previous publications of the author (references 1 through 5), this approach has been generalized to include the case of compressible fluid flows; this was accomplished by representing the stream function of a possible flow of a compressible fluid in terms of two arbitrary functions of one variable. In that part of the flow where the character of the flow is subsonic, one of these functions is an analytic function of a complex variable, the other, its conjugate. In the region of the flow in which its character is that of a supersonic flow, each of these two functions is a different function of one real variable.

The development of this approach raises several complex and fairly difficult questions; the purpose of this report will be to discuss, in some detail, the problems entailed by these methods.

In order to facilitate reading, in sections I and II the general idea of this method of approach will be summarized.

This investigation, carried out at Brown University, was sponsored by and conducted with the financial assistance of the National Advisory Committee for Aeronautics.

The author would like to express his sincere appreciation for the assistance and advice he received from Mr. Leonard Greenstone and to thank Mr. Herman Chernoff for his help with section III and Mr. Bernard Epstein for his help with section IV.

NOTATION

In dealing with differential equations the following notation is often used:

$$u_z = \frac{\partial u}{\partial z} = \frac{1}{2}\left(\frac{\partial u}{\partial x} - i\,\frac{\partial u}{\partial y}\right); \qquad u_{\bar{z}} = \frac{\partial u}{\partial \bar{z}} = \frac{1}{2}\left(\frac{\partial u}{\partial x} + i\,\frac{\partial u}{\partial y}\right)$$

$$\frac{\partial^2 u}{\partial z\,\partial \bar{z}} = \frac{1}{4}\left(\frac{\partial^2 u}{\partial x^2} + \frac{\partial^2 u}{\partial y^2}\right) = \frac{1}{4}\Delta u; \qquad z = x + iy, \quad \bar{z} = x - iy$$

$a = \left[a_o^2 - \frac{1}{2}(k - 1)q^2\right]^{1/2}$, speed of sound

a_o speed of sound at a stagnation point

a_n coefficients in the series expansion of T in powers of $e^{2\lambda}$; also used in the sense of equation (72)

b_n coefficients in the series expansion of T^{-1} in powers of $e^{2\lambda}$; also used in the sense of equation (72)

c_n (See equations (146), (148).)

$d_n^{(1)}$, $d_n^{(2)}$, $d_n^{(3)}$, $d_n^{(4)}$ (See equations (86), (87).)

e base of Naperian logarithms

$\exp(x) = e^x$

f, g arbitrary analytic functions, in the subsonic case; arbitrary twice differentiable functions of one real variable in the supersonic case

$$g^{[-1]}(Z) = \frac{dg(Z)}{dZ} = \frac{dg^{[o]}(Z)}{dZ}$$

$$g^{[o]}(Z) = g(Z)$$

$g^{[n]}(Z)$ nth iterated integral of $g(Z)$

$h = \left(\frac{k - 1}{k + 1}\right)^{1/2}$; $h = \frac{1}{\sqrt{6}}$ for $k = 1.4$

k constant in the equation of state $p = \sigma\rho^k$; the ratio of specific heats at constant pressure to constant volume; $k = 1.4$ for air

$l(H) = \left(\frac{\rho}{\rho(H)}\right)^2 (1 - M^2(H))$

p pressure

p_o pressure at stagnation point

q magnitude of the velocity vector

$\vec{q} = qe^{i\theta}$ velocity vector

schlicht $\equiv$ univalent

$s = 1 - T$

s_n (See equation (87).)

u, v Cartesian components of the velocity vector

x, y Cartesian components in the physical plane

A constant in the Von Kármán-Tsien equation of state

$$p = A + \frac{\sigma}{\rho}$$

$B = \sqrt{M^2 - 1}$ for $M > 1$

$$E^{(1)}(\Lambda) = -\int_0^{\Lambda} \Omega(\Lambda_1)\, d\Lambda_1$$

$$E^{(n+1)}(\Lambda) = -\int_0^{\Lambda} \left(E_{\Lambda\Lambda}{}^{(n)}(\Lambda_1) + \Omega(\Lambda_1)\, E^{(n)}(\Lambda_1)\right) d\Lambda_1$$

$\epsilon^{(n)}(\Lambda)$ (See equations (159).)

$\epsilon^{(n)}(\Lambda) = E_n(\Lambda^*)$

$$F = -(N_\zeta + N^2) = \frac{(k+1)M^4}{64(1-M^2)^3}\left[-(3k-1)M^4 - 4(3-2k)M^2 + 16\right]$$

for $k = 1.4$ (See equation (19).)

$F_1 = N_1^2 + \frac{1}{2}\frac{\partial N_1}{\partial \lambda}$ (See equation (45).)

F_m polynomial approximation of the mth degree in $e^{a\lambda}$ to F

F_2 (See equation (158).)

$$H = \exp\left(-\int_{-\infty}^{\zeta+\bar{\zeta}} N d(\zeta + \bar{\zeta})\right) = \frac{1}{(1-M^2)^{1/4}}\left[\frac{1}{1+\frac{1}{2}(k-1)M^2}\right]^{\frac{1}{2(k-1)}};$$

in this sense H is used only in the series expansion of ψ (See equation (17).)

$H = \int^q \frac{\rho}{q}\, dq$; in this sense H is used only as an independent variable (See equation (32).)

$$H_1 = \exp\left(-\int^{2\Lambda} N_1(\Lambda_1)\, d\Lambda_1\right)$$

Im imaginary part of

$L(H) = (M^2 - 1)\frac{\rho_o^2}{\rho(H)^2}$ (See $l(H)$.)

$$L^{(n)}(2\lambda) = \frac{(2n)!}{2^n n!} H(2\lambda)\mathfrak{L}^{(n)}(2\lambda)$$

$L_m^{(n)}(2\lambda) = \frac{(2n)!}{2^n n!} H(2\lambda) Q_m^{(n)}(2\lambda)$

M local Mach number; $M = q/a$

M_1, M_2, M_3, M_4 (See equation (57).)

$N = -\frac{(k+1)}{8} \frac{M^4}{(1-M^2)^{3/2}}$

$N_1 = -\frac{(k+1)}{8} \frac{M^4}{(M^2-1)^{3/2}}$

$Q^{(1)}(\lambda) = -4\int_{-\infty}^{\lambda} F\, d\lambda$

$Q^{(n+1)}(\lambda) = -\frac{1}{2n+1}\int_{-\infty}^{\lambda} (4F^{(\lambda_1)}Q^{(n)}(\lambda_1) + Q_{\lambda\lambda}^{(n)}(\lambda_1))d\lambda_1$

(See equation (107), and appendix II.)

$Q_m^{(n)}$ $Q^{(n)}$ computed employing F_m instead of F

Re real part of

$S_0(\psi) \equiv \frac{1-M^2}{\rho^2}\frac{\partial^2\psi}{\partial\theta^2} + \frac{q}{\rho}\frac{\partial}{\partial q}\left(\frac{q}{\rho}\frac{\partial\psi}{\partial q}\right) = 0$

$T = \sqrt{1-M^2}$

U, U_1, U_2, U^* (See equations (84), (85), ff., (173), (174).)

$V(\Lambda, \theta) = H_1^{-1}\psi(\Lambda, \theta)$ (See equation (50).) $V = V_1 + V_2$

$V_1(\xi, \eta) = f(\xi) + \sum_{n=1}^{\infty} E^{(n)}(\Lambda)\, f^{[n]}(\xi)$

$$V_2(\xi, \eta) = g(\eta) + \sum_{n=1}^{\infty} E^{(n)}(\Lambda)\ g^{[n]}(\eta)$$

V^*, V_1^*, V_2^* (See footnote, p. 24.)

$W(\xi, \eta)$ (See equation (158).)

X (See equation (100), ff.)

$Z = \lambda + i\theta$

$\beta = 1/k-1$; $\beta = 5/2$ for air

$\zeta = \left(-3(k + 1)\ \frac{\lambda}{2}\right)^{1/3}$

$\eta = \Lambda - \theta$; $\eta^* = \eta - a/2$ (See equation (155).)

θ the angle the velocity vector $\vec{q}$ makes with some fixed direction; $\vec{q} = qe^{i\theta}$; also $\theta = \frac{1}{2}(\xi - \eta)$ (See equation (46).)

$\lambda = \frac{1}{2}\left[\log \frac{1 - T}{1 + T} + \frac{1}{h} \log \frac{h^{-1} + T}{h^{-1} - T}\right]$ (See equation (20).)

$\xi = \Lambda + \theta$

$\xi^* = \xi - a/2$ (See equation (155).)

ρ density

ρ_o density at a stagnation point; equation (11)

$\sigma = \tau - 0.15$, equation (74); also a constant in the pressure-density relation $p = \sigma\rho^k$

$\tau = \frac{(k - 1)}{2a_o^2}\ q^2$

$\tau = \frac{1}{5}q^2$ for air, assuming $a_o = 1$

ψ stream function

$\psi^* = H\psi$

$\psi_* = H_1 V^*$

Δ Laplace operator: $\Delta\varphi = \frac{\partial^2\varphi}{\partial x^2} + \frac{\partial^2\varphi}{\partial y^2} = 4\left(\frac{\partial^2\varphi}{\partial z\,\partial\bar{z}}\right)$

$\Lambda(H) = \int^H \sqrt{L(H)}\,dH = \frac{1}{h}\tan^{-1}(hB) - \tan^{-1} B$

$\Sigma^*(V) = V_{\xi\eta} + \Omega(\xi + \eta)\,V = 0$

$\Omega(\zeta)$ an analytic function of a complex variable satisfying certain conditions

<u>Remark</u>: Observe that quite frequently functions will be considered in different planes although the notation will not, in general, indicate this. Thus, given $f(x, y)$, let

$$x = x(x^1, x^2)$$

$$y = y(x^1, x^2), \qquad \frac{\partial(x^1, x^2)}{\partial(x, y)} \neq 0$$

to obtain $f(x(x^1, x^2), y(x^1, x^2)) = f^1(x^1, x^2)$. The superscript will, in general, be omitted and only $f(x^1, y^2)$ written, since the meaning will be clear from the context.

I

In the following, the fluid flow to be considered will be supposed to be that of a two-dimensional irrotational steady flow of an inviscid, compressible fluid.

The assumption of the law of the conservation of matter leads to the equation of continuity:

$$\frac{\partial}{\partial x}(\rho u) + \frac{\partial}{\partial y}(\rho v) = 0 \tag{1}$$

where ρ is the density, (u,v) the Cartesian components of the velocity vector, and (x,y) the Cartesian coordinates in the plane of flow.

This equation implies that the differential expression $\rho u dy - \rho v dx$ is a complete differential - that is, that it

is the differential of some function, say $\psi(x,y)$, the so-called "stream function of the flow."

Thus

$$d\psi = \rho u dy - \rho v dx \tag{2}$$

which clearly implies the relations

$$\frac{\partial\psi}{\partial x} = -\rho v, \quad \frac{\partial\psi}{\partial y} = \rho u \tag{3}$$

The assumption that the flow is irrotational may be expressed mathematically by the equation

$$\frac{\partial u}{\partial y} - \frac{\partial v}{\partial x} = 0 \tag{4}$$

This implies that $u dx + v dy$ is the differential of some function, say, φ, the so-called "potential function of the flow." Thus,

$$d\varphi = u\,dx + v\,dy \tag{5}$$

so that

$$\frac{\partial\varphi}{\partial x} = u, \quad \frac{\partial\varphi}{\partial y} = v \tag{6}$$

and q, the magnitude of the velocity vector, is given by

$$q = \sqrt{\left(\frac{\partial\varphi}{\partial x}\right)^2 + \left(\frac{\partial\varphi}{\partial y}\right)^2} \tag{7}$$

Equations (3) and (5) imply the system of equations:

$$\frac{\partial\varphi}{\partial x} = \frac{1}{\rho}\frac{\partial\psi}{\partial y}, \quad \frac{\partial\varphi}{\partial y} = -\frac{1}{\rho}\frac{\partial\psi}{\partial x} \tag{8}$$

relating the stream function and potential function of a flow described above.

If it be assumed that the fluid motion represents an adiabatic process, then the equation of state assumes the form:

$$p = \sigma \rho^k + A \tag{9}$$

where A, σ and k are constants ($k = 1.4$ for air), and p is the pressure.

As the equation of state expresses the pressure as a function of the density alone, the first integral of Newton's law of motion for a gas may be easily obtained in the form of Bernoulli's equation:

$$\frac{1}{2} q^2 + \int_{p_0}^{p} \frac{dp}{\rho(p)} = 0 \tag{10}$$

The pressure, p, may be eliminated with the aid of some computation (which is omitted here) by combining (9) and (10) to obtain

$$\rho = \rho_0 \left[1 - \frac{k-1}{2} \frac{q^2}{a_0^2}\right]^{\frac{1}{k-1}} = \rho_0 \left[1 - \frac{k-1}{2a_0^2} \left\{\left(\frac{\partial\varphi}{\partial x}\right)^2 + \left(\frac{\partial\varphi}{\partial y}\right)^2\right\}\right]^{\frac{1}{k-1}} \tag{11}$$

Here ρ_0, a_0 are the density and the speed of sound, respectively, at a stagnation point.

If ρ is eliminated from equation (8) (giving ρ its value in (11) and substituting for q the expression in equation (7)), it may be seen that (8) represents a system of two <u>nonlinear</u> partial differential equations for φ and ψ.

In the case of an incompressible fluid flow, where ρ is constant, equation (8) represents a system of two <u>linear</u> partial differential equations, and it is these equations which provide the means whereby hydrodynamics may be studied as an application of the theory of analytic functions of a complex variable.

In order, in the case of a compressible fluid, to obtain a system of linear equations, it is necessary to replace this approach by an alternate and more complex one, namely,

the "hodograph method," according to which φ and ψ are considered as functions not of the Cartesian coordinates of the plane of flow, (x,y), but of q and θ, where $qe^{i\theta}$ is the velocity vector. Function q denotes the speed and θ the angle which the velocity vector forms with some fixed direction.

Consider a steady two-dimensional flow pattern; then at every point (x,y) there is a certain velocity vector $qe^{i\theta}$. Consequently, to every point (x,y) of the flow pattern, it is possible to associate the pair of quantities, q and θ. If q and $-\theta$ are now considered as the polar coordinates of some new plane, the "hodograph plane," to a streamline of the given flow pattern, there will correspond a line in this plane. The image of the flow patterns so obtained is called the hodograph of the flow pattern.

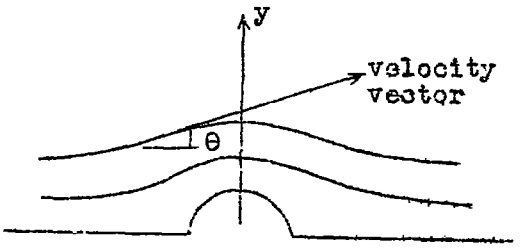

Figure 1.

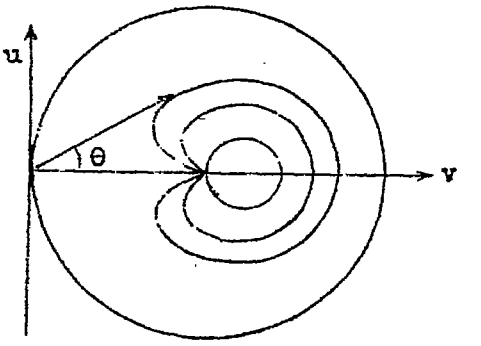

Figure 2.

In addition to having the image of the flow in the hodograph plane, it is frequently useful to have the image of the flow in the "logarithmic plane," that is, the plane the Cartesian coordinates of which are log q and θ. Obviously, it is possible to consider the stream and potential functions as defined in the hodograph or logarithmic planes.

That is, if (x,y) are given as functions of q and θ,

$$x = x_1(q,\theta)$$

$$y = y_1(q,\theta)$$

or of log q and θ

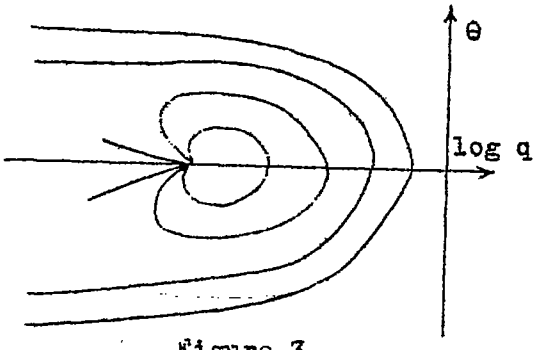

Figure 3.

$$x = x_2(\log q, \theta)$$

$$y = y_2(\log q, \theta)$$

then φ, ψ evidently may be expressed as a function of these variables

$$\varphi(x,y) = \varphi[x_1(q,\theta), y_1(q,\theta)] = \varphi[x_2(\log q,\theta), y_2(\log q,\theta)]$$

$$\psi(x,y) = \psi[x_1(q,\theta), y_1(q,\theta)] = \psi[x_2(\log q,\theta), y_2(\log q,\theta)]$$

On the other hand, if the potential and stream functions are given in the hodograph or logarithmic planes, that is, if

$$\varphi = \varphi_1(q,\theta), \quad \psi = \psi_1(q,\theta)$$

and

$$\varphi = \varphi_2(\log q,\theta), \quad \psi = \psi_2(\log q,\theta)$$

respectively, then it is not difficult to determine the corresponding streamlines in the physical plane (the actual plane of the flow).

In the case of an incompressible fluid flow, the potential and stream functions considered in the logarithmic plane, that is, as a function of $\log q$ and θ, satisfy a system of partial differential equations which has exactly the same form as equations (8). Thus,

$$\frac{\partial\varphi}{\partial\theta} = \frac{\partial\psi}{\rho\partial(\log q)}, \quad \frac{\partial\varphi}{\partial \log q} = -\frac{1}{\rho}\frac{\partial\psi}{\partial\theta}$$

(ρ being constant).

Therefore, except in problems of a special character, it is more convenient, in the case of an incompressible fluid flow, to operate in the physical plane (the (x,y)-plane).

The situation changes completely in the case of compressible flows, for, as has been mentioned, φ and ψ considered as functions of x and y satisfy a system of

nonlinear partial differential equations. If, however, φ and ψ are considered as functions, not of x and y, but of $\log q$ and θ, then, as Molenbroek and Chaplygin have shown, φ and ψ satisfy a system of linear partial differential equations: namely,

$$\left.\begin{aligned} \frac{\partial\varphi}{\partial\theta} &= \frac{q}{\rho}\frac{\partial\psi}{\partial q} \\ \frac{\partial\varphi}{\partial q} &= -\frac{1 - M^2}{\rho q}\frac{\partial\psi}{\partial\theta} \end{aligned}\right\} \tag{12}$$

where ρ is given by (11). (See reference 6.)

If φ is eliminated, then the following partial differential equation of second order is obtained for ψ:

$$S_0(\psi) = \frac{1 - M^2}{\rho^2}\frac{\partial^2\psi}{\partial\theta^2} + \frac{q}{\rho}\frac{\partial}{\partial q}\left(\frac{q}{\rho}\frac{\partial\psi}{\partial q}\right) = 0 \tag{13}$$

In the case of an incompressible fluid, $S_0(\psi)$ becomes for an appropriate choice of units

$$\frac{\partial^2\psi}{\partial\theta^2} + \frac{\partial^2\psi}{\partial(\log q)^2} = 0 \tag{14}$$

and, hence, the general representation of a possible stream function in terms of an arbitrary analytic function of one complex variable may be obtained: namely,

$$\psi(\log q, \theta) = \operatorname{Im}\left[g(\zeta)\right] \quad , \quad \zeta = \theta + i \log q \tag{15}$$

where g is an arbitrary analytic function of the complex variable ζ.

In previous publications of the author, a generalization of (15) for the case of a compressible fluid has been provided. The formulas of this generalization are the means by which various flow patterns of a compressible fluid may be obtained. (See equations (24), (25), ...)

Naturally, a procedure for obtaining flow patterns is

only the first step in the development of the theory, since in most cases it is not "some" flow which is required, but, rather, the flow around a given profile which must be known (as well as the laws which govern the motion of a compressible fluid). However, it may be noted that, in the subsonic case, at least, an approximate solution of the problem may be obtained if, for the function g in equation (24), the function which represents the complex potential in the logarithmic plane of the corresponding incompressible fluid flow is substituted.

In the following, it will be convenient to consider the subsonic and supersonic cases separately. This will be done in sections II and III, respectively.

II – THE SUBSONIC CASE

As was indicated in reference 3, the function ψ^* (which, when multiplied by

$$H = T^{-1/2}\left[1 + \frac{1}{5}\left(1 - T^2\right)\right]^{-5/4}$$

$$= \left(1 - M^2\right)^{-1/4}\left[1 + \frac{1}{5}M^2\right]^{-5/4} \tag{16}$$

where

$$T^2 = 1 - M^2 \tag{17}$$

yields the stream function ψ), considered as a function of λ and θ satisfies the equation:

$$\psi^*_{Z\bar{Z}} + F\psi^* = 0 \qquad Z = \lambda + i\theta \tag{18}$$

where

$$F = -0.12T^2 + 0.51 + \frac{0.21}{T^2} - \frac{0.63}{T^4} + \frac{0.45}{T^6} \tag{19}$$

and T and λ are connected by the relation

$$\lambda = \frac{1}{2} \log \left(\frac{1 - T}{1 + T}\right) + \frac{\sqrt{6}}{2} \log \left(\frac{\sqrt{6} + T}{\sqrt{6} - T}\right) \tag{20}$$

Expressions (16), (19), (20) have been evaluated for $k = 1.4$. In references 3 and 5 they are given for an arbitrary k.

If F is identically zero, then (18) becomes the Laplace equation

$$\frac{1}{4}\left[\frac{\partial^2 \psi^*}{\partial \lambda^2} + \frac{\partial^2 \psi^*}{\partial \theta^2}\right] = 0 \tag{21}$$

and

$$\psi^* = \mathrm{Im}\left[g(Z)\right], \qquad Z = \lambda + i\,\theta \tag{22}$$

is the "general solution" of this equation; here g is an arbitrary analytic function of the complex variable Z.

<u>Remark</u>: For $k = -1$, F vanishes - that is, in this case the "compressibility equation," in the (λ,θ)-plane (the so-called "pseudo-logarithmic" plane) becomes the Laplace equation.

The Von Kármán-Tsien method of obtaining compressible flows around closed bodies is based on this assumption (i.e., that the pressure-density relation is of the form

$$p = A + \frac{\sigma}{\rho}$$

instead of the adiabatic relation (9) employed by the author). The stream functions in the (λ,θ)-plane are then harmonic functions. (See references 4 and 5.)

As was proved in reference 2, the representation (22) of the "general solution" in terms of an arbitrary analytic function of a complex variable can be extended to the case where F is not identically zero, but is any function satisfying certain conditions.

Under the assumption that the function F^* and its derivatives satisfy the inequalities

$$\left|\frac{d^K F^*}{d\lambda^K}\right| \leq \frac{c(K+1)!}{(-\lambda)^{K+2}}, \quad \lambda < 0 \quad \text{and} \quad K = 0,1,2,\ldots \tag{23}$$

where c is a fixed constant, it was shown in reference 5 that the expression

$$\mathrm{Im}\left\{H(2\lambda)\left[g(Z) + \sum_{n=1}^{\infty} \frac{(2n)!}{2^{2n}\,n!} Q^{(n)}(2\lambda) g^{[n]}(Z)\right]\right\} \tag{24}$$ [1]

where

$$\left.\begin{aligned} g^{[0]}(Z) &= g(Z) \\ g^{[n]}(Z) &= \int_0^Z g^{[n-1]}(Z_1)\,dZ_1 \end{aligned}\right\} \tag{25}$$

$$n = 1,2,3,\ldots$$

($g(Z)$ an arbitrary analytic function of the complex variable Z) represents a solution of

$$U_{Z\bar{Z}} + F^*U = 0$$

The difficulty which arises in the further development of this approach arises from the fact that the function F which actually appears in (18) is a rather complicated function of λ, and it is not clear offhand whether or not it satisfies the inequalities (23). In order to overcome this difficulty, two possible alternatives may be employed:

1. In reference 5 it was proved that in the domain $\lambda < 0$ (which is the domain under consideration in the subsonic case) F, given by (19), may be represented in the form

---

[1] The $Q^{(n)}$ depend only on the function F^* and therefore being independent of the particular function $g(Z)$ can be computed and tabulated once and for all. (See appendixes I and II.)

$$F = \sum_{n=2}^{\infty} C_n e^{2n\lambda} \tag{26}$$

(See table 2.)

If, now, the infinite sum (26) is replaced by the finite sum

$$F_m = \sum_{n=2}^{m} C_n e^{2n\lambda} \tag{27}$$

(or approximated by some other polynomial in $e^{2\lambda}$), then, as may be shown rather easily (see reference 3), for every finite m, F_m and its derivatives satisfy the inequalities (23); and hence the representation (24) may be employed to yield solutions of (18) (F replaced by F_m).

As has been pointed out in previous publications of the author, the solutions of (18), when F is replaced by F_m, will then assume the following form

$$\psi_m^* = \mathrm{Im}\left\{H(2\lambda)\left[g(Z) + \sum_{n=1}^{\infty} \frac{(2n)!}{2^{2n}n!} Q_m^{(n)}(2\lambda) g^{[n]}(Z)\right]\right\} \tag{28}$$

the subscript m in $Q_m^{(n)}$ indicating the dependence of $Q^{(n)}$ on the m chosen, so that it seems likely that the actual solution of (18) may be written in the form

$$\psi^* = \lim_{m \to \infty} \psi_m^* \tag{29}$$

and this was shown to be the case. (See reference 3.)

The disadvantage of this approach lies in the fact that for values of M close to $M = 1$ (corresponding to values of T near $T = 0$), it is necessary to use a large number of terms of (26) in order to obtain a good approximation for F; that is, m of (27) must be chosen rather large.

In appendix I of reference 5, the developments of T and T^{-1} in powers of $e^{2\lambda}$ were given. By substituting these expressions for T and T^{-1} in (19), the desired expansion of F in powers of $e^{2\lambda}$ was obtained. In this appendix the values of T_{10}, that is, $\sum_{n=0}^{10} a_n e^{2n\lambda}$, where $T = \sum_{n=0}^{\infty} a_n e^{2n\lambda}$, are compared with the exact values of T, and the difficulty mentioned above for high Mach numbers may then be observed.

In this case the determination of the $Q_m^{(n)}$ does not involve any theoretical difficulties, but for large m, does entail difficulties of a computational nature.

<u>Remark</u>: Note that in the neighborhood of $T = 0$, that is, $M = 1$, T and $1/T$ can be developed in a series of $\zeta = (-3.6\lambda)^{1/3}$.[1] If these series are substituted in (19) for T and $1/T$, a development of F in a power series of ζ, which holds for $M < 1$, is obtained in the neighborhood of $M = 1$.

2. The second alternative consists in proving that the function F as defined by (19) does satisfy the inequalities (23), and therefore by the theorem stated in appendix I, the series (24) will converge.

Equations (96) determine each $Q^{(n)}$ up to a constant; this constant can be specified by the requirement that for some fixed value, say $q = q_0$ (and, therefore, for some λ, say, $\lambda = \lambda_0$), $Q^{(n)}$ vanishes. If the same q_0 is chosen for all n, $n = 1, 2, \ldots$, then the physical meaning of such a choice is the following:

Consider a flow, the speed of which at every point is nearly q_0; then, in the pseudo-logarithmic (the (λ, θ)-plane), the flow resembles that of a distorted flow of an <u>incompressible fluid.</u>[2]

[1]For general k, $\zeta = (-3(k+1)(\lambda/2))^{1/3}$. This choice yields $T = \zeta + \ldots$

[2]Note that in the incompressible case, λ and $\log q$ are identical.

The most natural choice, then, to make for q_0, would be[1] $q_0 = 0$; that is, assume all $Q^{(n)}$ vanish for $\lambda = -\infty$.

In appendix I, proof is given that the series (24) converges, under rather general conditions on F which include in particular the case defined by (19).

For values of M close to 1, many terms of (24) have to be taken into account in order to obtain good approximations to the stream function; consequently, it is necessary to have as many of the coefficients

$$L^{(n)} = \frac{(2n)!}{2^n n!} H(2\lambda) Q^{(n)}(2\lambda) \tag{30}$$

of

$$\psi^* = \operatorname{Im}\left\{ \sum_{n=0}^{\infty} L^{(n)} g^{[n]}(Z) \right\} \tag{31}$$

as possible. In appendix II, expressions for $Q^{(n)}(2\lambda)$, $n = 1, 2, \ldots, 8$ are derived, the first four of which can be expressed in closed form as a function of T, while in the expression for the last four, an integral appears; however, the integrand in this case can be written in closed form, so that at least numerical computation of the integral will not prove too difficult.

Tables of several of the functions involved have also been computed. (See table 5.)

---

[1]Except for $q_0 = 0$, there is no reason to distinguish any q_0 from any other, and if q_0 be chosen different from zero the question arises as to why this particular value of q_0 was chosen and not some other.

III - THE SUPERSONIC CASE

Every function ψ which satisfies equation (13), or (setting

$$H = \int_0^q \rho/q \, dq \quad ^{1)} \tag{32}$$

the equation

$$\frac{1 - M^2}{\rho^2} \psi_{\theta\theta} + \psi_{HH} = 0 \tag{33}$$

can be considered as the stream function of a possible compressible fluid flow.

In this section M will be taken greater than 1.

Since both M and ρ are functions of q, and since equation (32) may be interpreted as defining q as a function of H; consequently, the coefficient of $\psi_{\theta\theta}$ in (33) is also a function of H, say, $L(H)$ - that is,

$$L(H) = \frac{M^2 - 1}{\rho^2} > 0 \quad \text{(See Notation.)} \tag{34}$$

The reduction of equation (33) to canonical form may be accomplished by introducing the new variable $\Lambda = \Lambda(H)$, defined by

$$\Lambda(H) = \int^H \sqrt{L(H)} \, dH \tag{35}$$

Thus

$$\psi_{HH} = \sqrt{L(H)} \frac{\partial}{\partial \Lambda} \left(\sqrt{L(H)} \frac{\partial \psi}{\partial \Lambda} \right) = L(H)\psi_{\Lambda\Lambda} + \frac{1}{2} \psi_\Lambda \frac{\partial L(H)}{\partial \Lambda} \tag{36}$$

---

[1] This H is not to be confused with the H defined by equation (16). The lower limit of integration in (35) is to be chosen later.

so that the differential equation (33) assumes the form

$$\psi_{\theta\theta} - \psi_{\Lambda\Lambda} - \left[\frac{1}{2\ L(H)}\ \frac{\partial L(H)}{\partial \Lambda}\right]\psi_{\Lambda} = 0 \tag{37}$$

the equation is then in the required canonical form.

The coefficient of ψ_{Λ}, while it is a function of Λ, is difficult to express explicitly as such, but may, on the other hand, be given comparatively simply as a function of M. If $N_1(2\Lambda)$ is defined by

$$\frac{1}{2L(H)}\ \frac{\partial L(H)}{\partial \Lambda} = 4\ N_1(2\Lambda) \tag{38}$$

the expression

$$N_1(2\Lambda) = \frac{k + 1}{8}\ \frac{M^4}{(M^2 - 1)^{3/2}} \tag{39}$$

may then be obtained by formal computation; further $\Lambda(M)$ then may be seen to assume the form

$$\Lambda(M) = \frac{1}{h}\tan^{-1}(h\sqrt{M^2 - 1}) - \tan^{-1}(\sqrt{M^2 - 1})$$

$$= \frac{1}{h}\tan^{-1}(h\ B) - \tan^{-1} B \tag{40}$$

where

$$B^2 = M^2 - 1 \tag{41}$$

and

$$h = \sqrt{\frac{k - 1}{k + 1}}$$

It is possible to simplify equation (37) by the use of the following transformation.

$$\psi(\Lambda,\theta) = H_1\ V(\Lambda,\theta) \tag{42}$$

$$H_1 = \exp\left(-\int^{2\Lambda} N_1(\Lambda_1)d\,\Lambda_1\right) \tag{43}$$

$V(\Lambda,\theta)$ then satisfies the equation

$$V_{\theta\theta} - V_{\Lambda\Lambda} + 4\ F_1(2\Lambda)\ V = 0 \tag{44}$$

where

$$F_1(2\Lambda) = N_1{}^2 + \frac{1}{2}\frac{\partial N_1}{\partial \Lambda}$$

$$= \frac{k+1}{64}\left[\frac{5(k+1)}{B^6} + \frac{12k}{B^4} + \frac{6k-14}{B^2} - (4k+8) - (3k-1)B^2\right] \tag{45}$$

Finally, it is convenient to use an alternate form for equation (44). If ξ, η are defined by

$$\xi = \Lambda + \theta, \quad \eta = \Lambda - \theta \tag{46}$$

then (44) assumes the form

$$V_{\xi\eta} + F_1(\xi + \eta)\ V = 0 \tag{47}$$

The general solution of equation (47), which is of hyperbolic type, may be represented by a formula which involves two arbitrary, differentiable functions of one real variable.

In reference 5, appendix III, two different methods were considered of obtaining such a general solution. The first method is essentially based on obtaining the representation by use of Riemann's function of equation (47), while the second is the analogue, for hyperbolic equations, of the representations (24) and (31), for solutions of the elliptic equation (18). (See appendix III of the present report.)

The validity of this representation follows at once from the following:

<u>Theorem</u>: Let

$$\Sigma^*(V) = V_{\xi\eta} + \Omega(\xi + \eta)\, V = 0 \tag{48}$$

where $\Omega(\zeta)$ (Ω is considered as continued for complex values of the argument) is an analytic function of the complex variable ζ, which function is supposed regular for $|\zeta| \leq \Lambda_1$; then, there exists a set of functions

$$E^{(n)}(\Lambda), \quad n = 1,2,\ldots, \quad \Lambda = \frac{\xi + \eta}{2} \tag{49}$$

so that

$$V(\xi,\eta) = V_1(\xi,\eta) + V_2(\xi,\eta) \tag{50}$$

is a solution of (48), where

$$\begin{aligned} V_1(\xi,\eta) &= f(\xi) + \sum_{n=1}^{\infty} E^{(n)}(\Lambda) f^{[n]}(\xi) \\ V_2(\xi,\eta) &= g(\eta) + \sum_{n=1}^{\infty} E^{(n)}(\Lambda) g^{[n]}(\eta) \end{aligned} \tag{51}$$

and

$$f^{[o]}(\xi) = f(\xi), \qquad g^{[o]}(\eta) = g(\eta)$$

$$f^{[n+1]}(\xi) = \int_0^{\xi} f^{[n]}(\xi_1)\, d\xi_1, \qquad g^{[n+1]}(\eta) = \int_0^{\eta} g^{[n]}(\eta_1)\, d\eta_1$$

f and g being two arbitrary, twice differentiable functions of ξ and η, respectively.

The proof of this theorem will be given in appendix III. Note that in slightly different form this theorem was enunciated without proof in reference 5.

This theorem cannot, however, be applied directly to equation (47) as F_1 given by (45) has a pole for $\Lambda = 0$. There are, however, several possibilities for overcoming this difficulty. For example, F_1 can be approximated in the supersonic range, which is under consideration by a function F_m, which satisfies the conditions on Ω in the theorem.

In many instances, the whole flow lies in a part of the supersonic region and the theorem then can be applied directly, merely by shifting the origin, as is done in the following example. In appendix III, this will be discussed in more detail.

The following extremely simple example is intended to serve only as an illustration of the method described above for obtaining flow patterns in the hodograph (or related) planes. A discussion of the procedure necessary for determining the corresponding flow in the physical, the (x,y), plane will then conclude the section.

Choose for the $f(\xi)$, $g(\eta)$ of equation (51) the functions[1]

$$\left.\begin{aligned} f(\xi^*) &= 100(\xi^* + 0.1)^2 \\ g(\eta^*) &= -100(\eta^* + 0.1)^2 \end{aligned}\right\} \qquad (52)$$

If in (48) $\Omega = 0$, the corresponding flow in the (ξ, η)-plane will be

$$V^* = 100\left[(\xi^* + 0.1)^2 - (\eta^* + 0.1)^2\right] \qquad (53)$$

These streamlines are indicated in figure 4.

In the following the general case $\Omega \neq 0$ will be considered.

The evaluation of the functions V_1^*, V_2^* [2] introduced

---

[1]See appendix III. Essentially, ξ^*, η^* differ from ξ, η, respectively, only by a constant and V^* is the function V of equations (48), (50) when the corresponding value of ξ^*, η^* has been substituted for ξ, η, respectively.

[2]See appendix III. Functions V_1^*, V_2^* are obtained from V_1, V_2, respectively, of equation (51) when the corresponding values of ξ^*, η^* have been substituted for ξ, η, respectively.

in equations (51) then will consist of the following steps:

$$f(\xi^*) = f^{[0]}(\xi^*) = 100(\xi^* + 0.1)^2$$

$$f^{[1]}(\xi^*) = \int_0^{\xi^*} f(\xi_1^*)d\xi_1^* = \frac{100}{3}(\xi^* + 0.1)^3$$

$$f^{[2]}(\xi^*) = \int_0^{\xi^*} f^{(1)}(\xi_1^*)d\xi_1^*$$

$$= 100\left[\frac{(\xi^* + 0.1)^4}{12} - \frac{(0.1)^3\,\xi^*}{3} - \frac{(0.1)^4}{12}\right]$$

$$f^{[3]}(\xi^*) = 100\left[\frac{(\xi^* + 0.1)^5}{60} - \frac{(0.1)^3\,\xi^{*2}}{6} - \frac{(0.1)^4\,\xi^*}{12} - \frac{(0.1)^5}{60}\right]$$

$$f^{[4]}(\xi^*) = 100\left[\frac{(\xi^* + 0.1)^6}{360} - \frac{(0.1)^3\,\xi^{*3}}{18} - \frac{(0.1)^4\,\xi^{*2}}{24} - \frac{(0.1)^5\,\xi^*}{60} - \frac{(0.1)^6}{360}\right]$$

In table 6, the values of $\frac{df}{d\xi^*}$ and $f^{[n]}(\xi^*)$, $n = 0,1,2,3,4$ for a given set of values of ξ^* are tabulated.

<u>Remark</u>: Since $g(\eta^*) = -f(\eta^*)$, the values of $g^{(n)}(\eta^*)$ and $\frac{dg}{d\eta^*}$ may also be obtained from table 6.

The values of V_1^*, V_2^*, and $V^* = V_1^* + V_2^*$ as well as $\psi^* = H\,V^*$, are tabulated in table 10; ψ^* is a function of ξ^*, η^*.

In order to carry out the transition to the physical plane, the values of $\partial\psi^*/\partial q$ and $\partial\psi^*/\partial\theta$ are needed.[1]

[1]Henceforth the asterisk which indicates the dependence of the function on ξ^*, η^* will be omitted, as this will, in general, be clear from the context.

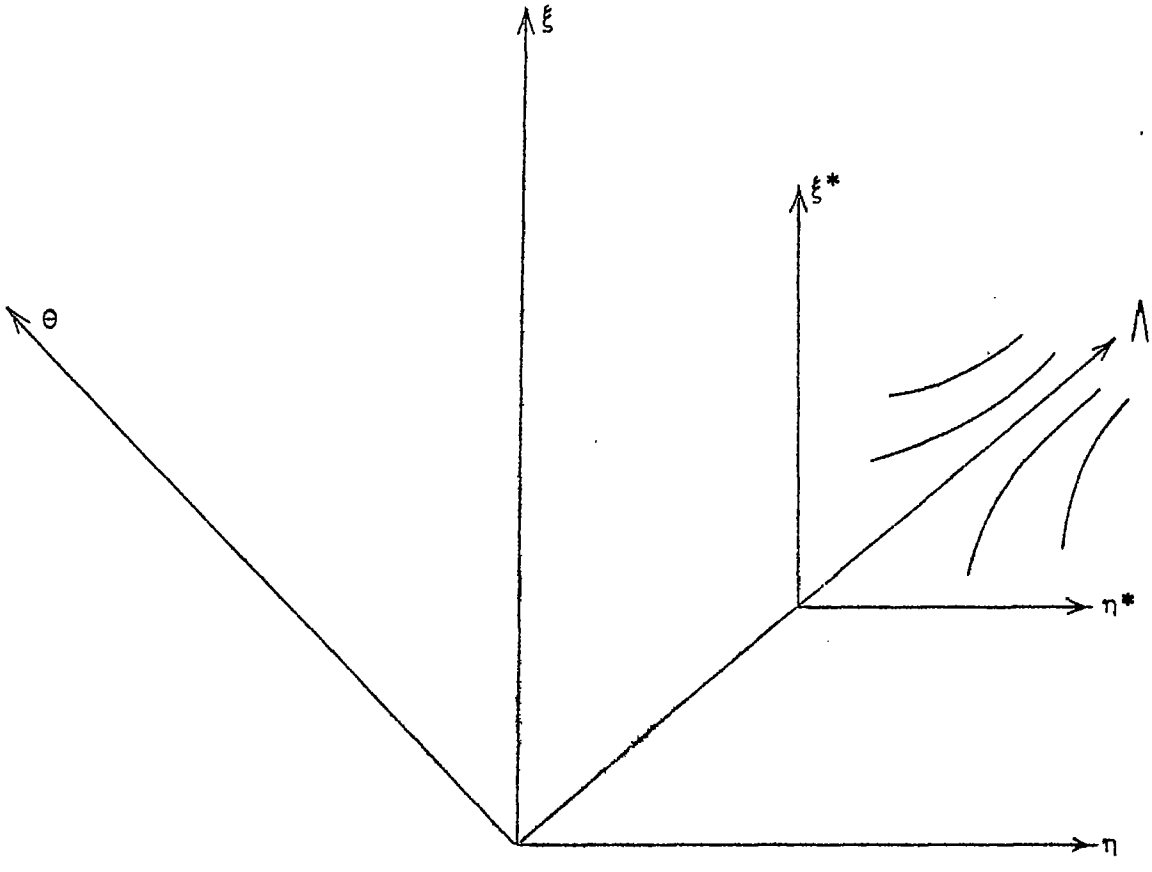

Figure 4.

Since

$$\frac{\partial\psi}{\partial q} = \psi_q = \psi_{\xi^*}\xi_q^* + \psi_{\eta^*}\eta_q^*$$
$$\frac{\partial\psi}{\partial\theta} = \psi_\theta = \psi_{\xi^*}\xi_\theta^* + \psi_{\eta^*}\eta_\theta^* \tag{55}$$

and

$$\psi_{\xi^*} = \frac{\partial H}{\partial \Lambda} V(\xi^*, \eta^*) + HV_{\xi^*} = H\left[-\frac{(k+1)}{8}\frac{(B^2+1)^2}{B^3} V + V_{\xi^*}\right]$$

$$\psi_{\eta^*} = H\left[-\frac{(k+1)}{8}\frac{(B^2+1)^2}{B^3} V + V_{\eta^*}\right] \tag{56}$$

where

$$V_{\xi^*} = \left[\frac{\partial f}{\partial \xi^*} + \sum_{n=1}^{\infty} \underline{E}^{(n)} f^{[n-1]}(\xi^*)\right]$$

$$+ \left[\sum_{n=1}^{\infty} \frac{1}{2} \underline{E}^{(n)}_{\Lambda^*} f^{[n]}(\xi^*)\right] + \left[\sum_{n=1}^{\infty} \frac{1}{2} \underline{E}^{(n)}_{\Lambda^*} g^{[n]}(\eta^*)\right] \tag{57}$$

$$= M_1 + M_2 + M_3 \text{ [1]}$$

$$V_{\eta^*} = \left[\frac{\partial g}{\partial \eta^*} + \sum_{n=1}^{\infty} \underline{E}^{(n)} g^{[n-1]}(\eta^*)\right] + M_2 + M_3$$

and

$$\xi^*_q = \frac{d\Lambda}{dq} = \frac{B}{q}, \quad \xi^*_\theta = 1$$

$$\eta^*_q = \frac{B}{q}, \quad \eta^*_\theta = -1 \tag{58}$$

---

[1] $\Lambda^* = \frac{\xi^* + \eta^*}{2}$; $\underline{E}^{(n)}_{\Lambda^*} = \frac{\partial \underline{E}^{(n)}}{\partial \Lambda^*}$; the use of $\underline{E}$ is to call attention to the shift of the origin; M_1, M_2, M_3 are equal to the expression in the first, second, and third brackets, respectively.

It follows that

$$\psi_q = \frac{B}{q}[\psi_{\xi}* + \psi_{\eta}*]$$

$$= \frac{B}{q} H \left[- \frac{(k+1)}{4} \frac{(B^2+1)}{B^3} V + M_1 + 2M_2 + 2M_3 + M_4 \right] \tag{59}$$

$$\psi_\theta = H(V_{\xi}* - V_{\eta}*) = H [M_1 - M_4]$$

$$M_4 = \frac{\partial g}{\partial \eta *} + \sum_{n=1}^{\infty} \underline{E}^{(n)} g^{[n-1]} (\eta *) \tag{60}$$

In table 9 the values of M_1, M_2, M_3, M_4, $\frac{q}{B}\psi_q$, and ψ_θ are tabulated.

In addition, in table 9 the values of

$$\left(\frac{\partial x}{\partial q}\right)_{\psi = \text{ const}} = -\cos\theta \frac{1}{\rho q^2} \frac{\left[\psi_q^2 q^2 - B^2 \psi_\theta^2\right]}{\psi_\theta} \tag{61}$$

and

$$\left(\frac{\partial y}{\partial q}\right)_{\psi = \text{ const}} = -\sin\theta \frac{1}{\rho q^2} \frac{\left[\psi_q^2 q^2 - B^2 \psi_\theta^2\right]}{\psi_\theta}$$

are also given.

As has been shown in reference 3, the corresponding values of x and y, that is, the image in the physical plane of the hodograph flow, may be obtained from the formulas[1]

[1]The integrals are to be understood as taken around the corresponding contour.

$$\left.\begin{aligned} x &= \int \left[\frac{1}{\rho}\psi_q \cos\theta - \frac{1}{\rho q}\psi_\theta \sin\theta\right] d\theta + \\ &\qquad \left[\frac{B^2}{\rho q^2}\psi_\theta \cos\theta - \frac{1}{\rho q}\psi_q \sin\theta\right] dq \\ y &= \int \left[\frac{1}{\rho}\psi_q \sin\theta + \frac{1}{\rho q}\psi_\theta \cos\theta\right] d\theta + \\ &\qquad \left[\frac{B^2}{\rho q^2}\psi_\theta \sin\theta + \frac{1}{\rho q}\psi_q \cos\theta\right] dq \end{aligned}\right\} \tag{62}$$

(ρ_o is supposed set equal to 1 here).

Now, along a streamline

$$d\psi = \psi_q dq + \psi_\theta d\theta = 0 \tag{63}$$

that is,

$$d\theta = -\frac{\psi_q}{\psi_\theta} dq \tag{64}$$

so that if the integration is carried out along a streamline, (62) then assumes the form

$$\left.\begin{aligned} x &= \int \cos\theta \frac{1}{\psi_\theta}\left[B^2\psi_\theta^2 - q^2\psi_q^2\right]\frac{1}{\rho q^2} dq \\ y &= \int \sin\theta \frac{1}{\psi_\theta}\left[B^2\psi_\theta^2 - q^2\psi_q^2\right]\frac{1}{\rho q^2} dq \end{aligned}\right\} \tag{65}$$

Similarly, if the integration is carried out along $\eta^* =$ constant, from the fact that

$$\xi^* - \eta^* = 2\theta$$

$$\xi^* + \eta^* = 2\Lambda$$

it is easily seen that

$$\left.\begin{aligned} d\theta &= \frac{1}{2}\, d\xi = d\Lambda \\ dq &= \frac{dq}{d\Lambda}\, d\Lambda = \frac{q}{B}\, d\theta \end{aligned}\right\} \qquad (66)$$

and therefore along $\eta^* = \text{constant}$

$$\left.\begin{aligned} x &= \int \frac{\cos\theta}{\rho}\left[\left(\psi_q + \frac{B}{q}\,\psi_\theta\right)\right] d\theta - \frac{1}{\rho q}\sin\theta\, d\psi \\ y &= \int \frac{\sin\theta}{\rho}\left[\left(\psi_q + \frac{B}{q}\,\psi_\theta\right)\right] d\theta + \frac{1}{\rho q}\cos\theta\, d\psi \end{aligned}\right\} \qquad (67)$$

(See diagram II, p. 85.)

IV – THE MIXED CASE

To every analytic function, g, of a complex variable Z there corresponds a solution $\psi^*(Z) = \psi^*(\lambda,\theta)$ of equation (18) obtained by substituting g into the operator given in equation (24). Referring to equation (16), $\psi = \psi^* H^{-1}$ may then be interpreted as a stream function, in the psuedo-logarithmic plane, of a possible flow pattern of a compressible fluid.[1]

---

[1] It is necessary to speak of "possible" flow patterns, since it may happen that the image in the physical plane of a flow obtained in this way, is multiply covered, in which case the complete flow pattern has no physical significance. (It should be noted, however, that, in this case, those parts of the flow pattern which are "schlicht" do possess physical significance.)

This flow pattern is defined in every (simply connected) intersection of the domain of regularity of g, with that of the domain L (L is that domain of the (λ,θ)-plane for which $\theta^2 \leq 3\lambda^2$, $\lambda < 0$), which intersection is supposed to include the origin.

If, for g, the complex potential of an incompressible fluid flow (in the pseudo-logarithmic plane) is substituted, the resulting function is defined in a domain $\underline{H}$ which in many instances may lie partially outside L. (See fig. 5.)

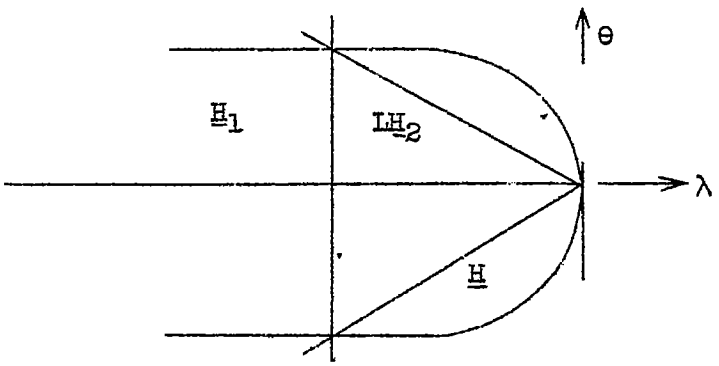

Figure 5.

Despite the fact that the function ψ^*, may be regular in the whole domain $\underline{H}$, the procedure which has been developed so far, yields only those values which lie in that part of $\underline{H}$ which lies in L, so that the question arises as to how to decide in what regions outside of L, ψ^* exists, as well as the question of how it may be determined.

In order to evaluate ψ^* for those values of λ which are near zero — that is, for high Mach numbers — many terms of the operator (24) are needed, so that it would be desirable to find other methods of evaluating ψ^* for these values.

Call this domain in which the operator (24) may be expeditiously employed $\underline{H}_1$. In the remaining part of the intersection of L and $\underline{H}$, ψ^* may be obtained by analytic continuation, as well as in that part of $\underline{H}$ which lies outside L.

In section 17 of reference 3, the general ideas underlying such a procedure were developed; in the following, a

more detailed discussion of this procedure will be given, and some methods indicated for overcoming certain difficulties which arise in its application.

In the following, the particular solutions which are due to Chaplygin will be given, in which case it is convenient to replace the variable q by

$$\tau = \frac{(k - 1)}{2a_o^2} q^2 = \frac{M^2}{M^2 + 2\beta} \tag{68}$$

$$\beta = \frac{1}{k - 1} \tag{69}$$

Obviously, for $k = 1.4$ and $a_o = 1$

$$\tau = \frac{1}{5} q^2, \qquad \beta = \frac{5}{2} \tag{70}$$

the values of τ for corresponding M, B, T, v/a_o, λ are given in tables 3 and 4.

If equation (13) (from which (18) was derived) is expressed in terms of τ and θ, it assumes the form

$$(1-\tau)^{-\beta}\left[\frac{1 - \tau(2\beta + 1)}{2\tau(1 - \tau)}\right]\psi_{\theta\theta} + \frac{\partial}{\partial\tau}\left[2\tau(1-\tau)^{-\beta}\frac{\partial\psi}{\partial\tau}\right] = 0 \tag{71}$$

Following Chaplygin and separating variables, the solution of (71) may be written in the form

$$\psi(\tau,\theta) = \sum_{\nu=0}^{\infty} a_\nu(\tau)\cos\frac{\pi\nu\theta}{L} + b_\nu(\tau)\sin\frac{\pi\nu\theta}{L} \tag{72}$$

$$(-L \leq \theta \leq L)$$

where a_ν, b_ν satisfy the differential equation

$$\frac{d}{d\tau}\left\{\tau(1-\tau)^{-\beta}\frac{da_\nu}{d\tau}\right\}-\frac{1-(2\beta+1)\tau}{\tau(1-\tau)}(1-\tau)^{-\beta}\frac{\nu^2\pi^2 a_\nu}{4L^2}=0$$

$$\frac{d}{d\tau}\left\{\tau(1-\tau)^{-\beta}\frac{db_\nu}{d\tau}\right\}-\frac{1-(2\beta+1)\tau}{\tau(1-\tau)}(1-\tau)^{-\beta}\frac{\nu^2\pi^2 b_\nu}{4L^2}=0 \tag{73}$$

which can easily be transformed into the hypergeometric equation.

Unfortunately, the power series for these functions converge so slowly that, in most cases, this approach must be abandoned for computational purposes. (See sec. 17 of reference 3.) On the other hand, if certain changes in this approach are made, numerical results may be obtained. Two such procedures will be discussed in the following:

1. The solutions of (73) are expanded in the form of a power series, not, however, around $\tau = 0$, which is the case of the hypergeometric series, but around some conveniently chosen value of τ which lies inside the interval under consideration. For example, it will often be convenient to introduce, for τ, the variable

$$\sigma = \tau - 0.15 \tag{74}$$

Since the particular solutions are often considered only for a small range of variation of τ, say, $0.13 \leq \tau \leq 0.20$, the coefficients of (73) may be approximated by polynomials in σ, so that if, say, $L = \pi/2$, the equation approximating (73) is for $\beta = 5/2$,

$$\begin{aligned}(-\sigma^3 + 0.5500\,\sigma^2 + 0.2325\,\sigma + 0.0191)\frac{d^2U}{d\sigma^2}\\ + (1.50000\,\sigma^2 + 1.4500\,\sigma + 0.1838)\frac{dU}{d\sigma}\\ + (0.1000 - 6.0000\sigma)\,\nu^2 U = 0\end{aligned} \tag{75}$$

It follows that every solution of this equation can be represented as a linear combination of two independent solutions, each of which can be written in the form of an infinite series in σ, which will converge for $|\sigma| < 0.15$, at least, a range of convergence which will be sufficient for most purposes.

Solutions $U_1(\sigma;\ \nu)$, $U_2(\sigma;\ \nu)$ are chosen so that

$$\left.\begin{aligned} U_1(0;\ \nu) &= 0 \qquad & U_1'(0;\ \nu) &= 1 \\ U_2(0;\ \nu) &= 1 \qquad & U_2'(0;\ \nu) &= 0 \end{aligned}\right\} \tag{76}$$

Thus[1]

$$\left.\begin{aligned} U_1(\sigma;\ \nu) &= \sigma + a_2\sigma^2 + a_3\sigma^3 + \ldots \\ U_2(\sigma;\ \nu) &= 1 + b_2\sigma^2 + b_3\sigma^3 + \ldots \end{aligned}\right\} \tag{77}$$

a_i, b_i, $i = 2, 3, \ldots$ being functions of ν.

If the foregoing expressions are substituted into (75), the following sets of equations are obtained

$$\left.\begin{aligned} &0.03825a_2 + 0.18375 = 0 \\ &1.45 - 0.1\,\nu^2 + 0.8325a_2 + 0.11475a_3 = 0 \\ &1.5 + 6\,\nu^2 + (4 - 0.1\,\nu^2)a_2 + 1.94625a_3 + 0.2295a_4 = 0 \\ &\ldots\ldots \\ &0.019125(n+1)(n+2)a_{n+2} + (n+1)(0.18375 + 0.235n)a_{n+1} \\ &\quad + (0.9n + 0.55n^2 - 0.1\,\nu^2)a_n + (-n^2 + 4.5n - 3.5 + 6\,\nu^2)a_{n-1} = 0 \\ &n = 2, 3, 4, 5, \ldots \end{aligned}\right\} \tag{78}$$

---

[1]The asymptotic behavior of solutions U_1 and U_2 for large values of n can be obtained as follows: If the coefficient F in (18) is approximated by $c\lambda^{-2}$ (for $k = 1.4$, $c = .035$) all subsequent formulas become simpler (e.g., see Ref. 3, p. 31). In particular, equation (43) of Ref. 3 becomes $H^s\psi_{\theta\theta} + \psi_{HH} = 0$, i.e., $l(H) = (1-M^2)/\rho^2 = H^s$, where s is a certain constant which is not equal to 2. For $\lambda = 0$, i.e., $M = 1$, $H = 0$. Therefore, if $U^{(n)} = L^{(n)}(H)\cos n\theta$ is substituted into this equation, there results $L^{(n)} = K(n^2/(s-2)\,H)$ where the functional form of K is independent of n. The expression $c\lambda^{-2}$ approximates asymptotically the exact value of F, since in the neighborhood of $\lambda = 0$,

$$F = \sum_{m=0}^{\infty} A_{-6+2m}\left[-3^{-1}(1-h^2)\,\lambda\right]^{(-6+2m)/3}$$

$$\left.\begin{aligned}
&0.03825b_2 - 0.1\nu^2 = 0\\
&6\nu^2 + 0.8325b_2 + 0.11475b_3 = 0\\
&0.2295b_4 + 1.94625b_3 + b_2(4 - 0.1\nu^2) = 0\\
&\cdots\cdots\\
&0.019125(n+1)(n+2)b_{n+2}+(n+1)(0.18375+0.23525n)b_{n+1}\\
&\quad + (0.9+0.55n^2-0.1\nu^2)b_n+(-n^2+4.5n-3.5+6\nu^2)b_{n-1} = 0\\
&n = 1, 2, 3, 4, 5, \ldots
\end{aligned}\right\} \quad (79)$$

Equations (78) and (79) then give a_i and b_i as polynomials in ν^2. Since it is often sufficient to consider the series (77) in a small interval, say, $|\sigma| < 0.05$, it will suffice to employ only a few terms of this series, and hence it is necessary to compute only a small number of a_i, b_i.

2. To employ the second method mentioned, equation (73) is written in the form (setting $L = \pi/2$ as before)

$$(0.15 + \sigma)(0.85 - \sigma)\frac{d^2u}{d\sigma^2} + (1.5\sigma + 1.225)\frac{du}{d\sigma} - \nu^2\left(\frac{0.1 - 6\sigma}{\sigma + 0.15}\right)u = 0 \qquad (80)$$

and two independent solutions $u_1(\sigma;\ \nu)$, $u_2(\sigma;\ \nu)$ are determined, not by the power series (77) but by an approximation method. That is, write

$$\frac{du}{d\sigma} = v \qquad \text{or} \qquad \Delta u = v\Delta\sigma \qquad (81)$$

Then

$$\Delta v = \left[-\left(\frac{1.5\sigma+1.225}{(0.15+\sigma)(0.85-\sigma)}\right)v+\nu^2\left(\frac{0.1-6\sigma}{(0.15+\sigma)^2(0.85-\sigma)}\right)u\right]\Delta\sigma \quad (82)$$

Assume that $\Delta\sigma$ is in a small interval, say 0.001, and that for $\sigma = 0$, $u = 0$, $v = 1$. If (81) and (82) are employed, $\Delta u(\sigma)$ and $\Delta v(\sigma)$ may be determined at $\sigma = 0$, and hence

$$\begin{aligned} u(0.001) &= u(0) + \Delta u(0) \\ v(0.001) &= v(0) + \Delta v(0) \end{aligned} \tag{83}$$

from these values of u and v, $\Delta u(0.001)$ and $\Delta v(0.001)$, and $u(0.002)$, $v(0.002)$ may be found and the entire procedure continued until an approximate curve is found for $u(\sigma)$, $0 \leq \sigma \leq 0.15$. In this manner the desired integration is performed.

Both methods described above are appropriate for the purpose of computation, but they are insufficient to give an insight into the behavior of the particular solutions when $\nu \rightarrow \infty$.

As has been mentioned, there are instances in which the whole flow is subsonic and therefore it is necessary to consider particular solutions only for this range. In this case it is useful to consider certain other expressions which will be derived in the following. This procedure is likewise based on the method of separation of variables. However, instead of employing the variables (q,θ) and eventually (τ,θ) as in the case of equation (71), the variables (λ,θ) are employed so that it becomes necessary to consider equation (18) once again. Function F has the expansion (26).

Let

$$\psi^* = U_\nu \cos \nu\theta \qquad (\text{or} \quad U_\nu \sin \nu\theta) \tag{84}$$

where ν now has the meaning

$$\nu = \frac{\nu^*}{L}, \qquad \nu^* = 0,1,2, \ldots$$

(Drop the subscript ν to let $U = U_\nu$; U will vary, of course, with the choice of ν, even though this is not indicated by the notation.) Thus, obtain for U the ordinary differential equation

$$U'' - \nu^2 U + 4FU = 0 \tag{85}$$

If F is written in the form given by equation (26), then as before, two independent solutions will be determined. These will be denoted by $U^{(1)}$, $U^{(2)}$; two cases must be distinguished, that is, whether ν is or is not an integer. In the latter case,

$$\left.\begin{aligned} U^{(1)} &= \sum_{n=0}^{\infty} d_n^{(1)} e^{(\nu+2n)\lambda} \\ U^{(2)} &= \sum_{n=0}^{\infty} d_n^{(2)} e^{(-\nu+2n)\lambda} \end{aligned}\right\} \tag{86}$$

where

$$d_0^{(1)} = 1 \qquad\qquad d_0^{(2)} = 1$$

$$d_1^{(1)} = \frac{-C_1}{1+\nu} \qquad\qquad d_1^{(2)} = \frac{-C_1}{1-\nu}$$

$$d_2^{(1)} = \frac{-C_2-C_1 d_1^{(1)}}{4+2\nu} \qquad\qquad d_2^{(2)} = \frac{-C_2-C_1 d_1^{(2)}}{4-2\nu}$$

$$\cdots\cdots \qquad\qquad \cdots\cdots$$

$$d_n^{(1)} = \frac{-C_n-C_{n-1}d_1^{(1)}-\ldots-C_1 d_{n-1}^{(1)}}{n^2+n\nu} \qquad d_n^{(2)} = \frac{-C_n-C_{n-1}d_1-\ldots-C_1 d_{n-1}^{(2)}}{n^2-n\nu}$$

C_n are defined in equation (26) and listed in table 2; while in the former:

$$\left.\begin{aligned} U^{(1)} &= \sum_{n=0}^{\infty} d_n^{(3)} e^{(\nu+2n)\lambda} \\ U^{(2)} &= \sum_{n=0}^{\infty} \left(\lambda s_n e^{(\nu+2n)\lambda} + d_n^{(4)} e^{(-\nu+2n)\lambda}\right) \end{aligned}\right\} \tag{87}$$

The convergence of these series will be discussed in appendix IV.

. . . . .

In section 17 of reference 3, a procedure has been indicated for constructing a mixed flow (that is, a flow which is partially supersonic) around an obstacle the boundary of which is a closed curve.

If the boundary curve is prescribed, then, probably[1], in many instances, no solution of the problem exists, and, therefore, the problem arises of finding necessary and sufficient conditions in order that a (mixed) flow pattern around an obstacle exist. In considering this equation, two cases have to be distinguished: Either

1. The behavior of the flow at infinity is completely prescribed (for example, a uniform flow with no vorticity), or

2. The flow at infinity possesses certain properties, but any solution such that its behavior at infinity is of a certain type will be considered as admissible.

The second problem is to determine when the solution is unique[2] and, further, under what conditions it is "stable." This situation suggests considering a problem which mathematically is much simpler (but still exceedingly difficult), and, in certain instances, can give the type of answer desired by the research engineer, namely, the question whether

---

[1]Unfortunately, no definite results in this direction are known to the author. On the other hand, investigations of problems of similar type seem to indicate that the above is the case. See, for instance, reference (9).

[2]It would be necessary to take into account the fact that solutions with a free boundary can exist. See examples of solutions with a free boundary in incompressible fluid case given in reference 10. What occurs when no continuous solution or a solution with a given free boundary exists, and under what condition a shock wave arises are not known. (See fig. 6.)

Case of Thiry, (reference 11)

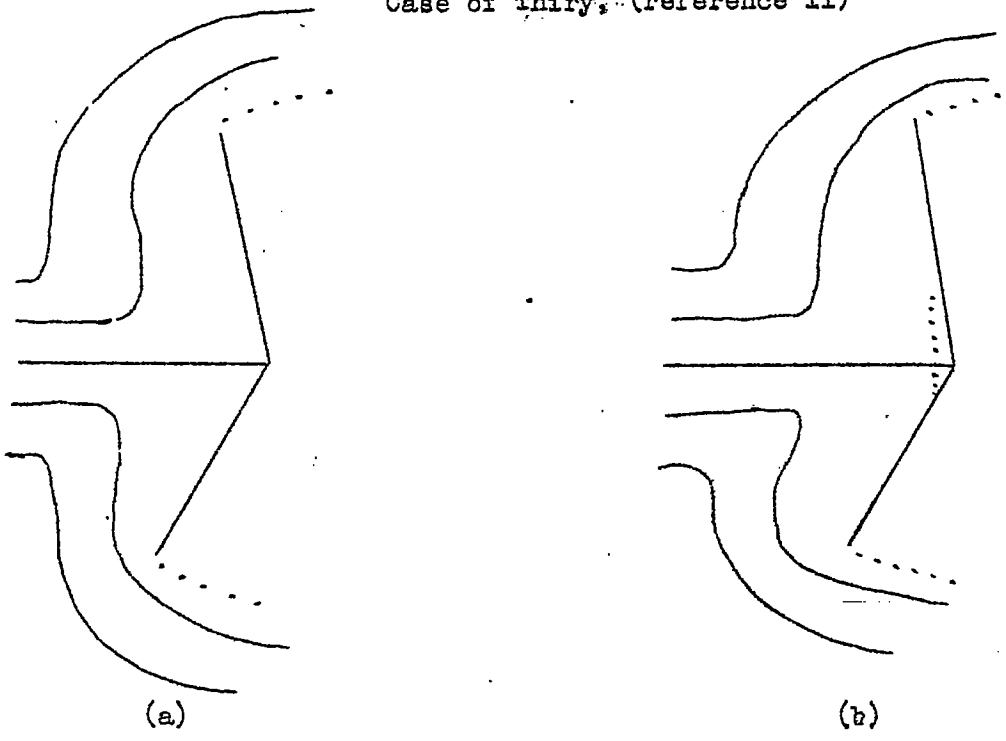

Case of Bergman, (reference 10)

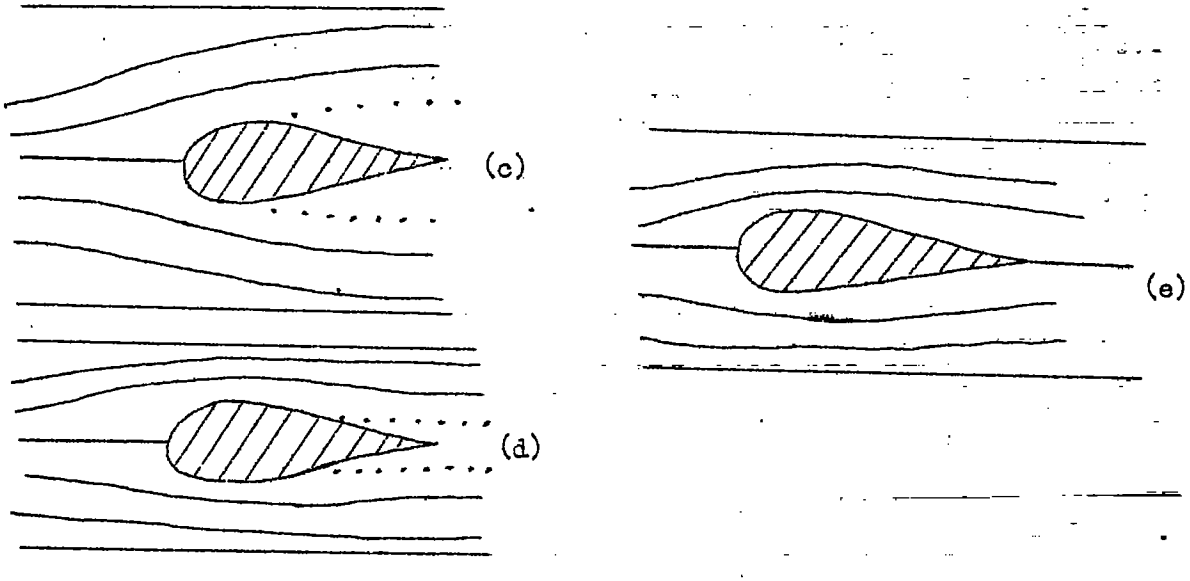

Figure 6.- Examples of different flows with free boundary around the same obstacle. A free boundary is indicated by . . . .

to a given hodograph there exists a flow possessing the prescribed behavior at infinity. Often it will suffice to know not whether a flow pattern exists around some prescribed (in the physical plane) profile, but only whether such a flow exists with prescribed (or approximately prescribed) velocity distribution. Then the whole investigation may be shifted to the hodograph plane, and the problem considered as formulated above. As an example, a flow around a Joukowski profile will be considered in order to determine whether to a hodograph similar to that indicated in figure 7 there corresponds some mixed flow. In the following, some necessary conditions for the existence of a flow pattern satisfying certain conditions will be given.

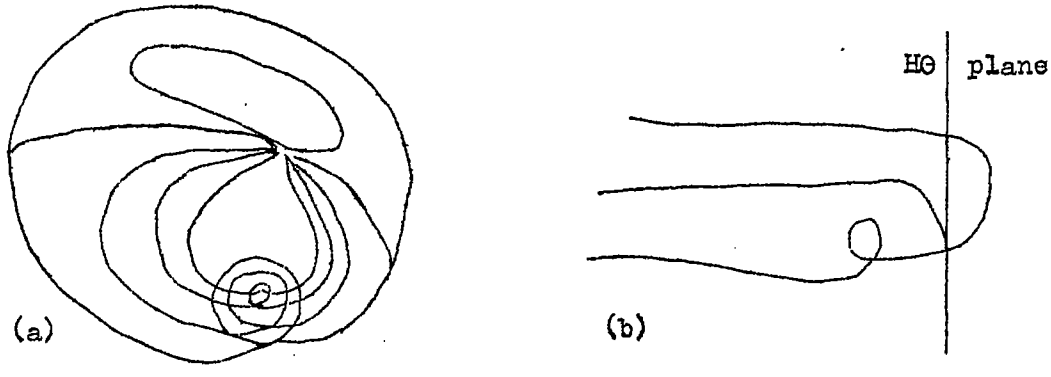

Hodograph Figure 7.

While, in the case of a subsonic flow, it is more convenient to operate in the (λ,θ)-plane (in the pseudo-logarithmic plane), in the case of a mixed flow, it is convenient to return to the (H,θ)-plane[1], since $\lambda(M)$ becomes imaginary for $M > 1$.

As λ and H are connected by the relation $d\lambda = \frac{dH}{\sqrt{l(H)}}$, $l(H) = \frac{1-M^2}{\rho^2}$, it does not present any theoretical difficulty to replace the variable λ by the variable H, in functions $S_k(\lambda,\theta,\lambda_o,\theta_o)$, $k = 1,2,3$, which represent a pseudo vortex, and two pseudo doublets, respectively. Thus, functions are obtained which shall be denoted by

$$T_k(H,\theta:H_o,\theta_o) = S_k(\lambda,\theta:\lambda_o\theta_o) \tag{88}$$

[1]Here, H is employed in the sense of equation (32).

It is now assumed that at the point (H_0,θ_0) (which is the image of the point at infinity in the physical plane) the function behaves like

$$A_1T_1(H,\theta;H_0,\theta_0)+A_2T_2(H,\theta;H_0,\theta_0)+A_3T_3(H,\theta;H_0\theta_0)+R(H,\theta) \quad (89)$$

where $R(H,\theta)$ is a regular function of H,θ. (Naturally, A_1, A_2, A_3 must satisfy the conditions indicated in section 14 of reference 3 in order that in the physical plane a flow around a closed curve is obtained.) Now, the question arises whether or not a function $R(H,\theta)$ can be found such that the expression (89) vanishes on the boundary line of the hodograph. (See reference 5.)

Remark: It is not immediately apparent that $T_3(H,\theta;H_0,\theta_0)$ is a single-valued function; however, it is possible to prove that this is always the case. The assumption is now made that the stream function ψ can be approximated in $\underline{H}_2$ by Chaplygin's solutions

$$\sum_{\nu=1}^{M}\left\{P_\nu(H)\left[A_\nu\cos\nu\theta+B_\nu\sin\nu\theta\right]+Q_\nu(H)\left[C_\nu\cos\nu\theta+D_\nu\sin\nu\theta\right]\right\} \quad (90)$$

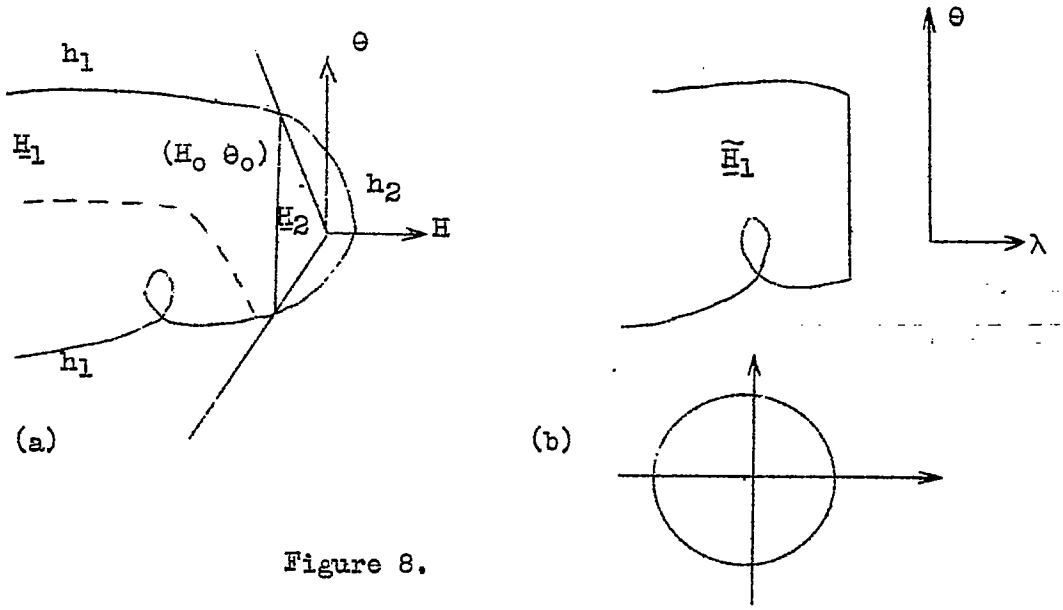

Figure 8.

A system of functions will now be constructed which, as will be shown, possesses the property that every function which is regular in $\underline{H}_1$ can be approximated by a conveniently chosen combination of these functions. As has been proved in appendix I, every solution of (18) can be represented in $\underline{H}_1$ in the form

$$\begin{gathered} R(H,\theta) = \mathrm{Re}[P(g)] \\ P(g) = L^{(o)}g(Z) + L^{(1)}g^{[1]}(Z) + \ldots, \qquad Z = \lambda(H) + i\theta \end{gathered} \tag{91}$$

(see equation (30)) where $g(Z)$ is a conveniently chosen analytic function of a complex variable. Let $\tilde{\underline{H}}_1$ be the image of $\underline{H}_1$ in the (λ,θ)-plane, and let $\tilde{W}(\lambda+i\theta)$ be that function which maps $\tilde{\underline{H}}_1$ into the unit circle (see fig. 8)

$$W(H,\theta) = \tilde{W}[\lambda(H) + i\theta] \tag{92}$$

maps $\underline{H}_1$ into the unit circle. Every regular analytic function $g(\lambda+i\theta)$ of a complex variable $\lambda + i\theta$ can be represented in $\underline{H}_1$ in the form

$$g = \sum_{\nu=0}^{\infty} a_\nu W^\nu$$

Setting

$$\left.\begin{aligned} R_{2n}(H,\theta) &= \mathrm{Re}\left\{P\left[W^n(\lambda(H)+i\theta)\right]\right\} \\ R_{2n+1}(H,\theta) &= \mathrm{Im}\left\{P\left[W^n(\lambda(H)+i\theta)\right]\right\} \end{aligned}\right\} \tag{93}$$

a system of functions is obtained such that every function ψ can be developed (and therefore approximated) in $\underline{H}_1$, by a series of such functions.

<u>Remark:</u> The classical theorem of Runge on approximation of analytic functions states that an analytic function can be approximated by a polynomial in a simply connected domain, while, here, an approximation on the boundary also is needed.

This difficulty can, however, be overcome in a manner similar to that described in reference 12. Since ψ^* satisfies in $\underline{H}_1$ the linear partial differential equation

$\Delta\psi^* + 4F\psi^* = 0$, the function $\psi^*(W)$ in the W-plane also satisfies an equation of the same type. Now, in reference 12, it is proved that to every solution $\psi^*(W)$, which is continuous in the closed domain, another solution ψ^* of the same equation can be determined which is regular in the closed domain, and such that $|\psi^+ - \psi^*| \leqq \epsilon$, where $\epsilon > 0$ can be chosen arbitrarily small.

The fact that the domain H_1 goes to infinity does not cause any difficulty, since the function ψ^* for $-\lambda$ sufficiently large is arbitrarily small and the domain H_1 can be replaced by a bounded domain, assuming that the line — — — — is part of the boundary curve. (See fig. 9.)

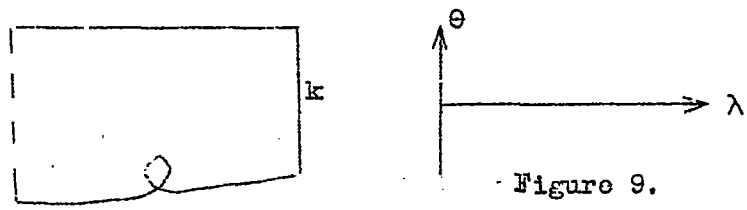

Figure 9.

Assume, now, that the required function exists. By the assumptions which have been made and the foregoing considerations $R(H,\theta)$ may be approximated in H_1 by

$\sum_{\nu=1}^{N} a_\nu R_\nu(H,\theta)$ and the entire term (89) in H_2 by $\sum_{\nu=1}^{M} b_\nu C_\nu(H,\theta)$.

Therefore,

$$\lim_{\substack{N\to\infty \\ M\to\infty}} \left\{ \int_{h_1} \left[\sum_{\nu=1}^{N} a_\nu R_\nu(H,\theta) + \sum_{\nu=1}^{3} A_\nu T_\nu \right]^2 ds + \int_{h_2} \left[\sum_{\nu=1}^{M} b_\nu C_\nu(H,\theta) \right]^2 ds \right.$$

$$+ \int_k \left[\sum_{\nu=1}^{N} a_\nu R_\nu(H,\theta) + \sum_{\nu=1}^{3} A_\nu T_\nu - \sum_{\nu=1}^{M} b_\nu C_\nu(H,\theta) \right]^2 ds$$

$$\left. + \int_k \left\{ \frac{\partial}{\partial H} \left[\sum_{\nu=1}^{N} a_\nu R_\nu(H,\theta) + \sum_{\nu=1}^{3} A_\nu T_\nu - \sum_{\nu=1}^{M} b_\nu C_\nu(H,\theta) \right] \right\}^2 ds \right\} = 0 \quad (94)$$

Remark: Note that $a_\upsilon = a_\upsilon^{(N)}$ and $b_\upsilon = b_\upsilon^{(N)}$ will, in general, depend on N, although this is not indicated in the notation.

From the preceding it is then possible to conclude that:

If $T_\upsilon(H,\theta;\ H_0,\theta_0)$, $\upsilon = 1,2,3$ denote functions with singularities at (H_0,θ_0) (see (88)), and $R\upsilon(H,\theta)$, $\upsilon = 1,2,3$ are particular solutions of (18) which are defined by (91) and (93) in the domain L, and, finally, $C_\upsilon(H,\theta)$, $\upsilon = 1,2,3,\ldots$ are the Chaplygin solutions which are obtained by replacing τ in (71) by $\tau = \tau(H)$ and applying the method of separation of variables, then, a necessary condition for the existence of a flow the hodograph H of which is prescribed and which satisfies the hypotheses previously indicated is that for M and N sufficiently large, and for conveniently chosen a_υ $(= a_\upsilon^{(N)})$ and $b_\upsilon (= b_\upsilon^{(N)})$, the expression on the left-hand side of (94) (omitting the limit signs, of course) can be made arbitrarily small.

CONCLUDING REMARKS

The treatment of two-dimensional irrotational motion of a compressible fluid, developed in this and preceding publications (references 1 through 5), can be considered as a direct generalization of the classical methods employed in the incompressible case.

In the present paper, a representation for a stream function of a compressible fluid flow in terms of an arbitrary analytic function (which had been previously derived) has been considerably improved. An analogous formula for the stream function of a supersonic flow in terms of two arbitrary, twice differentiable functions of a real variable is also obtained. A method is developed for extending a subsonic flow defined in a portion of the plane into a larger domain. In some instances this process will lead to partially supersonic flows.

The procedures described for determining flow patterns of a compressible fluid require, as a rule, long computations which necessitate the use of modern computational devices.

On the other hand, the equation, (24), for the stream function is linear, and therefore the principle of superposition of solutions may be applied. This fact suggests preparing an "atlas" of flow patterns, which should include stream functions $\psi_\nu(v, \theta)$, $\nu = 1, 2, \ldots, n$ of a number of basic flows (say, a flow around an obstacle of elliptical shape, etc.) as well as a number of simple solutions[1] $\psi_\mu(v, \theta)$, $\mu = 1, 2, 3, \ldots,$ of the compressibility equation (18). Every combination $\psi_\nu + \sum_{\mu=1}^{m} \alpha_\mu \psi_\mu$, where α_μ are constants, represents the stream function of a possible flow. By using some auxiliary tables (see reference 5) and conveniently changing the α_μ's, an engineer will be able, comparatively quickly, to vary every "basic" flow mentioned above, so as to obtain flows approximately, at least of the form desired. This procedure can be applied for supersonic, as well as for mixed flows.

Two-dimensional irrotational motion is only a rough approximation to the actual situation, since most flows are three-dimensional, and friction, turbulence, and so forth, influence the motion.

By the hydraulic hypothesis (see reference 15, p. 84) turbulence can, however, in many instances be disregarded. Further two-dimensional solutions can, in the axially symmetric case, be considered as a first approximation and used in order to obtain better approximate solutions of the three-dimensional problem. By using the two-dimensional solution, determining the density $\rho = \rho_0$, and replacing ρ by ρ_0 in the equations $\nabla(\rho\vec{q}) = 0$, $\nabla \times \vec{q} = 0$ (for the three-dimensional case) the above system is reduced to a linear one, $\nabla(\rho_0\vec{q}) = 0$, $\nabla \times \vec{q} = 0$. A solution q^1 of the linearized system in which $\vec{q}^1$ satisfies the required boundary conditions can be considered as a second approximation for the three-dimensional case.

---

[1]In certain cases it would be advisable to use for ψ_μ the functions χ_μ introduced in reference 5.

The use of certain tables which need be prepared only once will greatly facilitate the work.

The nonaxially symmetric case may be treated by combining the method described above with certain operational processes developed by the author for generating three-dimensional vectors satisfying

$$\nabla \vec{q} = 0 \qquad \text{and} \qquad \nabla \times \vec{q} = 0$$

By employing a procedure similar to the one given above, the boundary layer may be taken into account.

Brown University,
Providence, R. I., October 1945.

APPENDIX I

PROOF OF A FUNDAMENTAL THEOREM ON SUBSONIC FLOWS

In the previous reports of the author the basic theorem on which the entire method was developed was:

Theorem I: Let $F^*(2\lambda)$ be an analytic function of a real variable λ, defined for $-\infty < a \leq \lambda \leq -\epsilon < 0$, which possesses the property that

$$\left| \frac{d^K F^*}{d\lambda^K} \right| \leq \frac{c(K+1)!}{(\epsilon - \lambda)^{K+2}}, \quad \text{for} \quad a \leq \lambda \leq -\epsilon, \quad K = 0, 1, 2, \ldots \tag{95}$$

where c is a suitably chosen constant.

Further, let $Q^{(n)}(2\lambda)$, $n = 1, 2, \ldots$ denote a set of functions which are defined by the recurrence relations

$$(2n+1)Q_\lambda^{(n+1)} + Q_{\lambda\lambda}^{(n)} + 4F^*Q^{(n)} = 0, \quad n = 1, 2 \ldots \tag{96}$$

$$Q_\lambda^{(1)} = -4F^*$$

$$Q^{(n)}(a) = 0, \qquad -\infty < a < 0$$

Finally, let $g(\zeta)$ be an analytic function regular in a domain B, which contains the origin. Then

$$\psi^*(\lambda, \theta) = \operatorname{Im}\left\{g(Z) + \sum_{n=1}^{\infty} \frac{(2n)!}{2^{2n}n!} Q^{(n)}(2\lambda) g^{[n]}(Z)\right\} \tag{97}$$

$$g^{[n]}(Z) = \int_0^Z g^{[n-1]}(\zeta_1)\, d\zeta_1$$

$$g^{[0]}(Z) = g(Z)$$

will be a solution of

$$L(\psi^*) = \frac{1}{4}\,\Delta\psi^* + F^*\,\psi^* = \psi_{ZZ}{}^* + F^*\,\psi^* = 0 \qquad (98)$$

which solution will be defined in every simply connected domain lying in the intersection of B and H, where H denotes the domain $[a \leq \lambda \leq -\epsilon,\ \theta^2 < 3\,\lambda^2]$.

This theorem was not, however, proved for the F of (19), but was proved for F_m, where F_m was a polynomial in $e^{2\lambda}$ which approximated F in the interval $(-\infty,\lambda_0)$. $\lambda_0 < 0$ to a previously specified degree of closeness; and it was further shown that these F_m satisfied relation (95) as well as the other hypotheses of the theorem.

In the following, it will be shown that the F of (19) actually satisfies the hypothese of the theorem in the case where $a \geq -\infty$.

In order to prove theorem I for the F of (19), it is necessary to show that

<u>Theorem:</u> To every interval

$$I = [a \leqq \lambda \leqq -\epsilon,],\ -\infty < a,\ \epsilon < 0 \qquad (99)$$

there exists a constant $c = c(a, -\epsilon) < \infty$ such that the function F of (19) satisfies the inequality (95).

The main idea of the proof described below consists in showing that F, when continued in the complex domain, that is, $F(Z)$, $Z = \lambda_1 + i\lambda_2$, is an analytic function of the complex variable Z, which function is regular in every circle

$$\left|Z + \lambda_0\right| \leqq -\lambda_0 - \epsilon$$

Function $F(T)$ is a rational function of T the only singularity of which (for finite values of T) is a pole at $T = 0$. Therefore, in order to prove that F is a regular function of Z in the domain[1]

$$D = E[-\infty < a \leqq \operatorname{Re} Z \leqq -\eta < 0, \quad -\infty < 2\pi k \leqq \operatorname{Im} Z \leqq 2\pi k < \infty]$$

it suffices to prove that T is a regular function of Z in D and does not vanish there. Let $X = e^Z$. Then as Z varies in D, X varies in the domain

$$0 \leqq \epsilon \leqq |X| \leqq r < 1$$

with $\epsilon = \exp(a)$ and $r = \exp(-\eta)$.

Instead of considering

$$X = \frac{1 - T}{1 + T}\left(\frac{1 + h\,T}{1 - h\,T}\right)^{1/h} \qquad h = \sqrt{\frac{k - 1}{k + 1}}, \quad k > 1 \tag{100}$$

it will be found convenient to perform the substitution

$$s = 1 - T \tag{101}$$

All the above-mentioned considerations remain unaltered by the change of argument T of (100) except that it now becomes necessary to prove that s is distinct from 1 in D.

By substituting $T = 1 - s$ in (100) the following formula for X is obtained:

$$X = \frac{s}{2 - s}\left[\frac{h^{-1} + 1 - s}{h^{-1} - 1 + s}\right]^{h^{-1}} \tag{102}$$

Unless h^{-1} is a rational number, X will be an infinitely many valued function of s. In the following discussion, only that branch of the function X will be considered which has the property that

$$\operatorname{Im}\left\{\log\left[\frac{h^{-1} + 1 - s}{h^{-1} - 1 + s}\right]\Bigg|_{s = 0}\right\} = 0 \tag{103}$$

---

[1] $E[\quad]$ denotes the domain defined such that the coordinates of the points belonging to this domain satisfy the conditions given in the interior of the brackets.

This branch is uniquely determined within a circle of radius $h^{-1} - 1$, for the branch point nearest the origin occurs at $s = 1 - h^{-1}$. In the following, by $X(s)$ will always be denoted the branch of $X(s)$ described above, unless the contrary be specified.

Since $X(s)$ is regular at the origin it can be developed in a power series

$$X(s) = \sum_{n=1}^{\infty} a_n s^n \qquad a_1 \neq 0 \tag{104}$$

Now, as $a_1 \neq 0$, the inverse function $s(X)$ is regular at $X = 0$ and can be represented there in the form of a power series

$$s(X) = \sum_{n=1}^{\infty} b_n X^n \tag{105}$$

It will be shown that $s(X)$ is a regular function of X for $|X| < 1$ and therefore by a classical theorem of analysis, the power series (105) converges for $|X| < 1$.

<u>Lemma:</u> The function $s = s(X)$, which is the inverse of the branch of the function $X = X(s)$ of (102), which satisfies condition (103), is regular in the unit circle.

Therefore, at every point inside the circle $|s| < 1$ the power series can be inverted and $|s|$ expanded as a power series in $X - X_o$, where $X_o = X(s_o)$:

$$s = s_o + b_1(s_o)(X - X_o) + \ldots \tag{106}$$

It is now necessary to prove that the inversion about $s = 0$ converges throughout the interior of the circle $|X| = 1$. Two independent proofs of this fact will be presented.

A. Determine the values of s at which the inversion of $X(s)$ may become impossible. These points are at $s = 1$, 2, $-1/h$, $-\frac{1}{h} + 1$, $\frac{1}{h} + 1$, and $s = \infty$, the corresponding values of $|X|$ being 1, ∞, ∞, 0, and 1, respectively. Since only that branch of $s(X)$ for which $s(0) = 0$, not $s(0) = 1 + \frac{1}{h}$, is to be considered, it follows that the function $s(X)$ determined by the inversion of the specified branch $X(s)$ is regular inside the circle $|X| = 1$. Therefore the expansion of s as a power series in X will converge for $|X| < 1$, for as has just been shown by the foregoing reasoning, for no value of X inside the unit circle can $s(X)$ be singular.

B. Clearly, $X(s) = 0$ at $s = 0$ but nowhere else inside or on the circle $|s| = 1$. In particular, on the circle $|s| = 1$ it is not difficult to show that the minimum value of $|X|$ is 1. Hence, by the theorem on page 136 of reference 13 and the proof presented there it follows that, since dX/ds does not vanish at $s = 0$, s can be expanded as a power series in X convergent within the circle $|X| = 1$.

Since $X = e^Z$ and since it has been shown that s is an analytic function of X in $|X| < 1$, it follows that s is an analytic function of Z for $\mathrm{Re}(Z) < 0$.

Finally, to prove that s cannot be equal to 1 in D (and hence that $T \neq 0$), assume the contrary: namely, $s = 1$. Then by equation (1), $|X| = 1$, and therefore $\mathrm{Re}(Z) = 0$. But, for all Z in D the real part of Z is negative. Therefore T is distinct from zero throughout D, and thus F is a regular function of Z in D.

As has been indicated in section II, the proof of the validity of the representation (24) for $|\theta| < -\lambda\sqrt{3}$, $\lambda < 0$, has been given under the assumption that the quantity a, for which $Q^{(n)}(a) = 0$, is larger than $-\infty$.

In the following the proof for the excluded case $a = -\infty$ will be presented. The proof is essentially based on the following corollary to the theorem, equation (99).

<u>Corollary</u>: To every positive number $p < 1$ and every negative number $\lambda^{(o)}$ there exists a number $c(p, \lambda^{(o)})$ such that

$$\left|\frac{d^K F}{d\lambda^K}\right| \leqq \frac{c(K+1)!}{(-\lambda p)^{K+2}} \quad \text{for } \lambda < \frac{\lambda^{(o)}}{1-p}, \quad K = 0,1,2,\ldots$$

<u>Proof</u>: Let $G(Z) = \int_{-\infty}^{Z} F(\zeta)d\zeta$, $Z = \lambda_1 + i\lambda_2$. As has been shown above (see also pt. II of sec. 15 of reference 3 and appendix I of reference 5), $F(Z)$ can be represented for $\lambda_1 < 0$ in the form of the following series:

$$F(Z) = \sum_{n=1}^{\infty} \alpha_n e^{2nZ}$$

(The constant term vanishes since $F(-\infty) = 0$.) Therefore (justifying term-by-term integration by the usual argument involving uniform convergence) $G(Z)$ may be expressed in the form:

$$G(Z) = \sum_{n=1}^{\infty} \beta_n e^{2nZ}, \quad \beta_n = \frac{\alpha_n}{2n}$$

Having chosen $\lambda^{(o)}$, it follows from the last equation that there exists a constant, $A(\lambda^{(o)})$ such that for $\lambda_1 = \operatorname{Re} Z \leqq \lambda^{(o)}$,

$$\left|G(Z)\right| \leqq A(\lambda^{(o)})e^{2\lambda_1}$$

Now consider any real λ such that $\lambda < \lambda^{(o)}/(1-p)$. (It is understood that $\lambda^{(o)}$ and p are held fixed during the present discussion.) Draw a circle c with center at $Z = \lambda$ and with radius $(-p\lambda)$; this circle lies entirely to the left of the line $\lambda_1 = \lambda^{(o)}$. According to the Cauchy integral formula:

$$\left(\frac{d^K F}{dZ^K}\right)_{Z=\lambda} = \left(\frac{d^{K+1} G}{dZ^{K+1}}\right)_{Z=\lambda} = \frac{(K + 1)!}{2\pi i} \oint_C \frac{G(Z)dZ}{(Z - \lambda)^{K+2}}$$

By setting $Z = \lambda - p\lambda e^{i\Phi}$, $0 \leqq \Phi \leqq 2\pi$, the last equation becomes:

$$\left(\frac{d^K F}{dZ^K}\right)_{Z=\lambda} = \frac{(K + 1)!}{2\pi} \int_0^{2\pi} \frac{(-p\lambda)G(\lambda - p\lambda e^{i\Phi})e^{i\Phi}\, d\Phi}{(-p\lambda e^{i\Phi})^{K+2}}$$

Now:

$$\left|e^{i\Phi}\right| = 1, \quad \left|-p\lambda, e^{i\Phi}\right| = -p\lambda,$$

and

$$\left|(-p\lambda)G(\lambda - p\lambda\, e^{i\Phi})\right| \leqq \left|(-p\lambda)A(\lambda^{(o)})e^{2Re(\lambda - p\lambda e^{i\Phi})}\right|$$

Since, for

$$0 \leqq \Phi \leqq 2\pi, \quad Re(\lambda - p\lambda e^{i\Phi}) \leqq \lambda(1 - p),$$

there is obtained the inequality:

$$\left|(-p\lambda)G(\lambda - p\lambda e^{i\Phi})\right| \leqq (-p\lambda)A(\lambda^{(o)})e^{2\lambda(1-p)}$$

Since $\lambda < \lambda^{(o)}/(1 - p)$, it is apparent that there exists a constant $c(p,\lambda^{(o)})$ such that the right-hand side of the last inequality is less than c for all λ. Therefore, from the second form of the Cauchy formula given above, there results:

$$\left|\frac{d^K F}{dZ^K}\right|_{Z=\lambda} \leqq \frac{c(p,\lambda^{(o)})(K + 1)!}{(-p\lambda)^{K+2}}, \quad \lambda < \frac{\lambda^{(o)}}{1 - p}$$

which yields the statement of the corollary.

Now, given any $\lambda < 0$, let $\lambda^{(o)}$ be chosen as follows: $\lambda^{(o)} < 0$ and p positive but less than one such that $\lambda < \lambda^{(o)}/(1 - p)$, and then the corresponding number $c(p,\lambda^{(o)})$, has to be determined.

Further, the dominants $\tilde{Q}^{(n)}$ have to be defined by

$$\tilde{Q}^{(1)} = 4c \int_{-\infty}^{\lambda} \frac{d\lambda}{(-p\lambda)^2} = \frac{4c}{p^2(-\lambda)}$$

and the recursion formula

$$(2n+1)\tilde{Q}_{\lambda}^{(n+1)} = \tilde{Q}_{\lambda\lambda}^{(n)} + 4c(-\lambda p)^{-2} \int_{-\infty}^{\lambda} \tilde{Q}_{\lambda}^{(n)}\, d\lambda, \quad Q^{(n)}(-\infty) = 0, \quad n = 1,2,\ldots$$

rather than by[1] (94) of reference 3.

Now it will be shown that there exist a set of constants $c^{(n)}$ such that:

$$\tilde{Q}_{\lambda}^{(n)} = c^{(n)}(-p\lambda)^{-(n+1)} \qquad (n = 1,2,\ldots)$$

<u>Proof</u>: This equation is seen to hold for $n = 1$ with $c^{(1)} = 4c$. Suppose the theorem holds for $n = n_0$. Then:

$$(2n_0 + 1)\tilde{Q}_{\lambda}^{(n_0+1)} = c^{(n)}\left((-p\lambda)^{-(n_0+1)}\right)_{\lambda} + 4c(-\lambda p)^{-2} \int_{-\infty}^{\lambda} c^{(n_0)}(-p\lambda)^{-(n_0+1)} d\lambda$$

By carrying out the integration, there results:

$$(2n_0 + 1)\tilde{Q}^{(n_0+1)} = (-p\lambda)^{n_0+2}\left[p\, c^{(n_0)}(n_0 + 1) + \frac{4c\, c^{(n_0)}}{p\, n_0}\right]$$

By letting

$$c^{(n_0+1)} = \frac{p\, c^{(n_0)}(n_0 + 1) + 4c\, c^{(n_0)}/p\, n_0}{(2n_0 + 1)}$$

it is seen that the induction is complete, and the statement made above is established.

---

[1]It should be remarked that in formula (94) there is a misprint: $(-\lambda)^{-n}$ should be replaced by $(-a)^{-n}$.

If the last equation on both sides is divided by $c^{(n_0)}$, the following formula is obtained for the ratio of successive coefficients:

$$\frac{c^{(n_0+1)}}{c^{(n_0)}} = \frac{p(n_0 + 1) + 4c/p\ n_0}{2n_0 + 1}$$

By letting $n_0 \rightarrow \infty$, the result obtained is (dropping the subscript on n_0):

$$\lim_{n \rightarrow \infty} \frac{c^{(n+1)}}{c^{(n)}} = \frac{p}{2}$$

from which the convergence of the series $1 + \sum_{n=1}^{\infty} \zeta^n \tilde{Q}^{(n)}(2\lambda)$ (see (97) of reference 3) is assured for $\left|\frac{\zeta}{2\lambda}\right| < 1$ or $\theta^2 < 3\lambda^2$.

APPENDIX II

THE EVALUATION OF THE $Q^{(n)}$'s AND THEIR DERIVATIVES

In appendix I, it has been shown that operator (24), when applied to a function g which is analytic in a domain B, generates a solution of (18), which is defined in that simply connected subdomain of B, the coordinates of which satisfy the relation

$$\theta < \sqrt{3}\,|\lambda| \qquad \lambda < 0$$

In this fashion, possible stream functions in the (λ,θ)-plane of a compressible fluid have been formed.

However, it is necessary to evaluate the functions $Q^{(n)}$, defined by (107), in order to apply operator (24) in practice, and in reference 3 this has been done for $Q^{(1)}$, $Q^{(2)}$, $Q^{(3)}$, and $Q^{(4)}$. Often, a greater number of Q's is required, and for this reason, in this appendix $Q^{(n)}$, $n = 1, 2, \ldots, 8$ are computed.

As it has been shown on pp. 51-51d, F as defined by (19) does actually satisfy the conditions of theorem I of appendix I, when $a = -\infty$. The $Q^{(n)}$'s can be determined as follows:

$$(2n+1)Q_\lambda^{(n+1)} + Q_{\lambda\lambda}^{(n)} + 4F\,Q^{(n)} = 0 \qquad (107)$$

$$Q^{(1)} = -4\int_{-\infty}^{\lambda} F\,d\lambda$$

$$Q^{(n)}(-\infty) = 0, \qquad n = 1,2,\ldots$$

If equation (20) be differentiated, it may be easily seen that

$$\frac{d\lambda}{dT} = \frac{-5T^2}{(T^2-1)(T^2-6)} \qquad (108)$$

so that if F be given its value in equation (19), then

$$Q^{(1)} = -4\int_{\lambda=-\infty}^{\lambda} F\,d\lambda = -4\int_{T=1}^{T} F\,\frac{d\lambda}{dT}\,dT$$

$$= -4\int_{T=1}^{T}\left(-0.12T^2+0.51+0.21T^{-2}-0.63T^{-4}+0.45T^{-6}\right)$$

$$\times\left(\frac{-5T^2}{(T^2-1)(T^2-6)}\right)dT$$

$$= -0.50T^{-3}+0.35T^{-1}-2.40T+1.44+1.28\log\left(\frac{\sqrt{6}+T}{\sqrt{6}-T}\right) \qquad (109)^{1}$$

---

[1]Note that there is a misprint in formula (107) for $Q^{(1)}$ given in reference 3; for general k, the correct formulas for $Q^{(1)}$ and $Q^{(3)}$ are:

$$Q^{(1)} = \frac{(1+k)}{8}\left[\frac{(1-3k)}{k-1}T+\frac{2k}{k+1}T^{-1}-\frac{5}{3}T^{-3}+\frac{4}{h(k+1)^2(k-1)}\right.$$

$$\left.\times\log\frac{hT+1}{-hT+1}\right]_{T=1}^{T} \qquad (109a)$$

$$Q^{(3)} = -\frac{1}{2048}\frac{(k+1)^2}{(k-1)}\left[\frac{(3k-1)^2}{3}T^3-\frac{(6k^3+28k^2-58k+16)}{(k-1)}T\right.$$

$$+\frac{(41k^4+96k^3+18k^2-112k-91)(k-1)}{(k+1)^3}T^{-1}$$

$$-\frac{(44k^3+192k^2+236k+80)(k+1)}{3(k+1)^2}T^{-3}-\frac{(39k^2-80k-115)(k-1)}{5(k+1)}T^{-5}$$

$$-10k(k-1)T^{-7}-\frac{25}{9}(k^2-1)T^{-9}$$

$$\left.+\frac{64h}{(k-1)^2(k+1)^3}\log\frac{1/h-T}{1/h+T}\right]_{T=1}^{T} \qquad (109b)$$

From (107), for $n = 1$, it may be seen that

$$3Q^{(2)} = -\int_{-\infty}^{\lambda}\left(\frac{d^2Q^{(1)}}{d\lambda^2} + 4\,FQ^{(1)}\right)d\lambda$$

$$= -\int_{-\infty}^{\lambda}\left(-4\,\frac{dF}{d\lambda} - Q^{(1)}\frac{dQ^{(1)}}{d\lambda}\right)d\lambda = \int_{-\infty}^{\lambda} d\left(4F + \frac{1}{2}Q^{(1)2}\right) \tag{110}$$

Therefore

$$Q^{(2)} = \frac{1}{3}\left(4F + \frac{1}{2}Q^{(1)2}\right)_{-\infty}^{\lambda} = \frac{4}{3}F + \frac{1}{6}Q^{(1)2} \tag{111}$$

In (107), set $n = 2$ to obtain

$$5Q_{\lambda}^{(3)} = -Q_{\lambda\lambda}^{(2)} - 4FQ^{(2)} \tag{112}$$

and if this be integrated from $-\infty$ to λ, the following expressions are obtained

$$5Q^{(3)} = -Q_{\lambda}^{(2)} - 4\int_{-\infty}^{\lambda} FQ^{(2)}d\lambda$$

$$= -Q_{\lambda}^{(2)} - \frac{16}{3}\int_{-\infty}^{\lambda} F^2 d\lambda + \frac{1}{6}\int_{-\infty}^{\lambda} Q^{(1)2}\frac{dQ^{(1)}}{d\lambda}d\lambda \tag{113}$$

If $Q^{(1)}$ is given its value in (109), (113) upon integrating the last term assumes the form

$$Q^{(3)} = -\frac{1}{5}Q_{\lambda}^{(2)} + \frac{1}{90}\left(Q^{(1)}\right)^3 - \frac{16}{15}\int_{T=1}^{T} F^2\,\frac{d\lambda}{dT}\,dT$$

$$= -0.2000Q_{\lambda}^{(2)} + 0.0111\left(Q^{(1)}\right)^3 + 0.0256T^3 - 0.1152T + 0.2194 + 0.0452T^{-1}$$

$$-0.1575T^{-3} + 0.0376T^{-5} + 0.0420T^{-7} - 0.0200T^{-9} + 0.0886\,\log\frac{\sqrt{6}-T}{\sqrt{6}+T} \tag{114}$$

<u>Remark</u>: $Q_\lambda^{(2)}$ and $Q_\lambda^{(1)}$ can also be expressed in closed form as functions of T.

If n is set equal to 3 in (107), then

$$7Q^{(4)} = -Q_\lambda^{(3)} + \int_{\lambda=-\infty}^{\lambda} (-4F)Q^{(3)}d\lambda$$

and if $(-4F)$ is replaced by $Q_\lambda^{(1)}$ and the indicated integration by parts performed, then the formula

$$7Q^{(4)} = -Q_\lambda^{(3)} + Q^{(1)}Q^{(3)} - \int_{\lambda=-\infty}^{\lambda} Q^{(1)}Q_\lambda^{(3)}d\lambda \qquad (115)$$

is obtained. Now, insert for $Q_\lambda^{(3)}$ the expression

$$Q_\lambda^{(3)} = -\frac{1}{5}Q_{\lambda\lambda}^{(2)} - \frac{4}{5}FQ^{(2)}$$

obtained by setting $n = 2$ in (107). This yields

$$7Q^{(4)} = -Q_\lambda^{(3)} + Q^{(1)}Q^{(3)} + \frac{1}{5}\int_{\lambda=-\infty}^{\lambda} Q^{(1)}Q_{\lambda\lambda}^{(2)}\,d\lambda$$

$$+ \frac{4}{5}\int_{\lambda=-\infty}^{\lambda} FQ^{(1)}Q^{(2)}d\lambda \qquad (116)$$

In order to evaluate the first integral, two successive partial integrations are performed: namely,

$$\int Q^{(1)}Q_{\lambda\lambda}^{(2)}d\lambda = Q^{(1)}Q_\lambda^{(2)} - \int Q_\lambda^{(1)}Q_\lambda^{(2)}d\lambda$$

$$= Q^{(1)}Q_\lambda^{(2)} - Q_\lambda^{(1)}Q^{(2)} + \int Q^{(2)}Q_{\lambda\lambda}^{(1)}\,d\lambda \qquad (117)$$

Insert this expression into (116) and employ (107) for $n = 1$: namely, $-3Q_\lambda^{(2)} = Q_{\lambda\lambda}^{(1)} + 4FQ^{(1)}$, to obtain

$$7Q^{(4)} = -Q_\lambda^{(3)} + Q^{(1)}Q^{(3)} + \frac{1}{5}\,Q^{(1)}Q_\lambda^{(2)} + \frac{4}{5}\,FQ^{(2)}$$

$$+ \frac{1}{5}\int Q^{(2)}(Q_{\lambda\lambda}^{(1)} + 4FQ^{(1)})d\lambda$$

$$= Q_\lambda^{(2)} + Q^{(1)}Q^{(3)} + \frac{1}{5}\,Q^{(1)}Q_\lambda^{(2)} + \frac{4}{5}\,FQ^{(2)} - \frac{3}{10}\,Q^{(2)^2} \tag{118}$$

<u>Remark</u>: By using the previous results, (118) may be expressed in a closed form as a function of T.

It has not as yet proved possible to express $Q^{(n)}$, $n \geq 5$, only in terms of the preceding $Q^{(n)}$'s and their derivatives, which formulas would yield for $Q^{(n)}$, $n \geq 5$, closed expressions in T. Consequently, it has been necessary to derive formulas for $Q^{(n)}$, $n = 5, 6, 7, 8$ in terms of the preceding $Q^{(n)}$'s and their derivatives but which also include one integration. Thus, a formal computation leads to the following

$$Q^{(5)} = -\frac{1}{9}\,Q_\lambda^{(4)} - \frac{4}{9}\int_1^T FQ^{(4)}\,\frac{d\lambda}{dT}\,dT \tag{119}$$

$$Q^{(6)} = -\frac{1}{11}Q_\lambda^{(5)} + \frac{1}{11}\,Q^{(1)}Q^{(5)} - \frac{1}{11}\int_1^T Q^{(1)}Q^{(5)}\frac{d\lambda}{dT}\,dT \tag{120}$$

$$Q^{(7)} = -Q_\lambda^{(6)} + Q^{(1)}Q^{(1)} + \frac{1}{11}\,Q^{(1)}Q_\lambda^{(6)} - \frac{1}{22}\,Q^{(1)^2}Q^{(6)}$$

$$+ \frac{3}{11}\int_1^T Q_\lambda^{(5)}Q^{(2)}\,\frac{d\lambda}{dT}\,dT \tag{121}$$

$$Q^{(8)} = -\frac{1}{15} Q_\lambda^{(7)} + \frac{1}{15} Q^{(1)}Q^{(7)} + \frac{1}{195} Q^{(1)}Q_\lambda^{(6)}$$

$$-\frac{1}{390}Q^{(1)^2} Q^{(6)} + \frac{1}{65}\int Q_\lambda^{(6)}Q^{(2)} \frac{d\lambda}{dT} dT \tag{122}$$

In order to evaluate the expressions obtained for the $Q^{(n)}$'s, not only the preceding $Q^{(n)}$ must be known as functions of T, but their derivatives and the derivatives of F must be known as well.

The following tables supply some of the needed derivatives. Observe that

$$Q_{\lambda^S}^{(m)} = \frac{\partial^S Q^{(m)}}{\partial\lambda^S}, \qquad \begin{matrix} m = 1,2,\ldots \\ S = 0,1,\ldots \end{matrix} \tag{123}$$

for $S = 0$, $Q_{\lambda^S}^{(m)} = Q^{(m)}$.

In table 5, typical functions necessary for the explicit evaluation of the Q's have been tabulated.

Table

Derivatives of $Q^{(n)}$ of sth order

	s	
$Q^{(1)}$	0	$-4\int_{-\infty}^{\lambda} F d\lambda$
	s	$-4\,\dfrac{\partial^{(s-1)}F}{\partial\lambda^{(s-1)}}$
$Q^{(2)}$	0	$\frac{4}{3}F + \frac{1}{6}(Q^{(1)})^2$
	1	$+\frac{4}{3}F_\lambda - \frac{4}{3}FQ^{(1)}$
	2	$\frac{4}{3}F_{\lambda^2} - \frac{4}{3}F_\lambda Q^{(1)} + \frac{16}{3}F^2$
	3	$\frac{4}{3}F_{\lambda^3} - \frac{4}{3}F_{\lambda^2}Q^{(1)} + 16F_\lambda F$
	4	$\frac{4}{3}F_{\lambda^4} - \frac{4}{3}F_{\lambda^3}Q^{(1)} + \frac{64}{3}F_{\lambda^2}F + 16(F_\lambda)^2$
	5	$\frac{4}{3}F_{\lambda^5} - \frac{4}{3}F_{\lambda^4}Q^{(1)} + \frac{80}{3}F_{\lambda^3}F + \frac{160}{3}F_{\lambda^2}F_\lambda$
	6	$\frac{4}{3}F_{\lambda^6} - \frac{4}{3}F_{\lambda^5}Q^{(1)} + 32F_{\lambda^4}F + 80F_{\lambda^3}F_\lambda + \frac{160}{3}(F_{\lambda^2})^2$
$Q^{(3)}$	0	$-\frac{1}{5}Q^{(2)}_\lambda + \frac{1}{90}(Q^{(1)})^3 - \frac{16}{15}\int_{-\infty}^{\lambda} F^2 d\lambda$
	1	$-\frac{1}{5}Q^{(2)}_{\lambda^2} - \frac{4}{5}Q^{(2)}F$
	2	$-\frac{1}{5}Q^{(2)}_{\lambda^3} - \frac{4}{5}Q^{(2)}_\lambda F - \frac{4}{5}Q^{(2)}F_\lambda$
	3	$-\frac{1}{5}Q^{(2)}_{\lambda^4} - \frac{4}{5}(Q^{(2)}_{\lambda^2}F + 2Q^{(2)}_\lambda F_\lambda + Q^{(2)}F_{\lambda^2})$

$Q^{(3)}$	s	$-\frac{1}{5}Q_{\lambda^{s+1}}^{(2)}-\frac{4}{5}\frac{\partial^{s-1}}{\partial\lambda^{s-1}}(Q^{(2)}F)$
$Q^{(4)}$	0	$-\frac{1}{7}Q_{\lambda}^{(3)}+\frac{Q^{(3)}Q^{(1)}}{7}+\frac{1}{35}Q_{\lambda}^{(2)}Q^{(1)}+\frac{4}{35}Q^{(2)}F-\frac{3}{70}(Q^{(2)})^2$
	1	$-\frac{1}{7}Q_{\lambda^2}^{(3)}-\frac{4}{7}FQ^{(3)}$
	s	$-\frac{1}{7}Q_{\lambda^{s+1}}-\frac{4}{7}\frac{\partial^{s-1}}{\partial\lambda^{(s-1)}}(Q^{(3)}F)$
$Q^{(5)}$	0	$-\frac{1}{9}Q_{\lambda}^{(4)}-\frac{4}{9}\int_{-\infty}^{\lambda}FQ^{(4)}d\lambda$
	1	$-\frac{1}{9}Q_{\lambda^2}^{(4)}-\frac{4}{9}FQ^{(4)}$
	s	$-\frac{1}{9}Q_{\lambda^{s+1}}^{(4)}-\frac{4}{9}\frac{\partial^{s-1}}{\partial\lambda^{s-1}}(Q^{(4)}F)$
$Q^{(6)}$	0	$-\frac{1}{11}Q_{\lambda}^{(5)}+\frac{1}{11}Q^{(5)}Q^{(1)}-\frac{1}{11}\int_{-\infty}^{\lambda}Q_{\lambda}^{(5)}Q^{(1)}d\lambda$
	1	$-\frac{1}{11}Q_{\lambda^2}^{(5)}-\frac{4}{11}Q^{(5)}F$
	s	$-\frac{1}{11}Q_{\lambda^{s+1}}^{(5)}-\frac{4}{11}\frac{\partial^{s-1}}{\partial\lambda^{s-1}}(Q^{(5)}F)$
$Q^{(7)}$	0	$-\frac{1}{13}Q_{\lambda}^{(6)}+\frac{1}{13}Q^{(6)}Q^{(1)}+\frac{1}{143}Q_{\lambda}^{(5)}Q^{(1)}$
		$-\frac{1}{286}Q^{(5)}(Q^{(1)})^2+\frac{3}{143}\int_{-\infty}^{\lambda}Q_{\lambda}^{(5)}Q^{(2)}d\lambda$
	1	$-\frac{1}{13}Q_{\lambda^2}^{(6)}-\frac{4}{13}Q^{(6)}F$
	s	$-\frac{1}{13}Q_{\lambda^{s+1}}^{(6)}-\frac{4}{13}\frac{\partial^{s-1}}{\partial\lambda^{s-1}}(Q^{(6)}F)$
$Q^{(8)}$	0	$-\frac{1}{15}Q_{\lambda}^{(7)}+\frac{1}{15}Q^{(7)}Q^{(1)}+\frac{1}{195}Q_{\lambda}^{(6)}Q^{(1)}-\frac{1}{390}Q^{(6)}(Q^{(1)})^2$
		$+\frac{1}{65}\int_{-\infty}^{\lambda}Q_{\lambda}^{(6)}Q^{(2)}d\lambda$
	s	$-\frac{1}{15}Q_{\lambda^{s+1}}^{(7)}-\frac{4}{15}\frac{\partial^{s-1}}{\partial\lambda^{s-1}}(Q^{(7)}F)$

Table

The Values of F as a Function of T

$$F = -0.12T^2 + 0.51 - \frac{0.21}{T^2} - \frac{0.63}{T^4} + \frac{0.45}{T^6}$$

$$F_\lambda = 0.048T^3 - 0.336T + \frac{0.204}{T} + \frac{0.084}{T^3} + \frac{3.564}{T^5} + \frac{6.804}{T^7} + \frac{3.240}{T^9}$$

$$F_{\lambda^2} = -0.0288T^4 + 0.2688T^2 - 0.6024 + \frac{0.1680}{T^2} + \frac{3.4560}{T^4}$$

$$- \frac{34.171}{T^6} + \frac{93.895}{T^8} - \frac{97.978}{T^{10}} + \frac{34.992}{T^{12}}$$

$$F_{\lambda^3} = +0.0230T^5 - 0.2688T^3 + 0.8909T - \frac{0.5779}{T} + \frac{2.2944}{T^3} - \frac{59.956}{T^5}$$

$$+ \frac{453.86}{T^7} - \frac{1493.6}{T^9} + \frac{2357.1}{T^{11}} - \frac{1763.6}{T^{13}} + \frac{503.88}{T^{15}}$$

$$F_{\lambda^4} = -0.0230T^6 + 0.3226T^4 - 1.4454T^2 + 2.0993 + \frac{1.1167}{T^2}$$

$$- \frac{70.286}{T^4} + \frac{1063.4}{T^6} - \frac{7496.1}{T^8} + \frac{27817}{T^{10}} - \frac{57015}{T^{12}}$$

$$+ \frac{64722}{T^{14}} - \frac{38094}{T^{16}} + \frac{9069.9}{T^{18}}$$

$$F_{\lambda^5} = (0.0276T^7 - 0.4515T^5 + 2.5503T^3 - 5.5954T + 3.4356T^{-1}$$
$$-59.495T^{-3} + 1672.4T^{-5} - 21263T^{-7} + 147246T^{-9} - 598241T^{-11}$$
$$+1472885T^{-13} - 2211474T^{-15} + 1973284^{-17} - 959960T^{-19}$$
$$+195910T^{-21})$$

$$F_{\lambda^6} = (-0.0387T^8 + 0.7225T^6 - 4.9235T^4 + 14.540T^2 - 0.2690T$$
$$-17.522 + 3.7520T^{-1} -30.572T^{-2} - 16.348T^{-3} + 1909.9T^{-4}$$
$$+22.512T^{-5} - 41666T^{-6} - 9.6480T^{-7} + 483449T^{-8}$$
$$-3350057T^{-10} + 14632715T^{-12} - 41337762T^{-14} + 76127168T^{-16}$$
$$-90418589T^{-18} + 66612802T^{-20} - 27646870T^{-22} + 4936939T^{-24})$$

APPENDIX III

PROOF OF A FUNDAMENTAL THEOREM ON SUPERSONIC FLOWS; EVALUATION OF THE $\underline{E}^{(n)}$

The following theorem was enunciated without proof in section III:

Let

$$\sum{}^{*}(V) = V_{\xi\eta} + \Omega(\xi + \eta)\, V = 0 \tag{48}$$

where $\Omega(\zeta)$ (Ω is considered as continued for complex values of the arguments) is an analytic function of the complex variable ζ, which function is supposed regular for $|\zeta| \leq \Lambda$; then, there exists a set of functions

$$E^{(n)}(\Lambda), \qquad n = 1,2, \ldots \Lambda = \frac{\xi + \eta}{2} \tag{49}$$

such that

$$V(\xi,\eta) = V_1(\xi,\eta) + V_2(\xi,\eta) \tag{50}$$

is a solution of (48) where

$$\left.\begin{aligned} V_1(\xi,\eta) &= f(\xi) + \sum_{n=1}^{\infty} E^{(n)}(\Lambda) f^{[n]}(\xi) \\ V_2(\xi,\eta) &= g(\eta) + \sum_{n=1}^{\infty} E^{(n)}(\Lambda) g^{[n]}(\eta) \end{aligned}\right\} \tag{51}$$

and

$$f^{[0]}(\xi) = f(\xi) \qquad\qquad g^{[0]}(\eta) = g(\eta)$$

$$f^{[n+1]}(\xi) = \int_0^{\xi} f^{[n]}(\xi_1)\,d\xi_1, \qquad g^{[n+1]}(\eta) = \int_0^{\eta} g^{[n]}(\eta_1)\,d\eta_1$$

f and g being two arbitrary, twice differentiable functions of ξ and η, respectively.

The following is a proof of this theorem. Substitute (50) and (51) and (52) into (48) to obtain

$$\left[g(\eta) + f(\xi)\right]\left[E_{\Lambda}^{(1)}+\Omega(\Lambda)\right] + \left[g^{[1]}(\eta) + f^{[1]}(\xi)\right]$$
$$\left[E_{\Lambda}^{(2)}+E_{\Lambda\Lambda}^{(1)}+\Omega(\Lambda)E^{(1)}(\Lambda)\right] + \ldots + \left[g^{[n]}(\eta) + f^{[n]}(\xi)\right]$$
$$\left[E_{\Lambda}^{(n+1)} + E_{\Lambda\Lambda}^{(n)} + \Omega(\Lambda)E^{(n)}(\Lambda)\right] + \ldots = 0 \tag{124}$$

Thus, if the $E^{(m)}$, $m = 1, 2, \ldots$ are determined by the recurrence relation

$$\left.\begin{aligned} E^{(1)}(\Lambda) &= -\int_0^{\Lambda} \Omega(\Lambda_1)d\Lambda_1 \\ E^{(n+1)}(\Lambda) &= -\int_0^{\Lambda} E_{\Lambda\Lambda}^{(n)}(\Lambda_1) + \Omega(\Lambda_1)E^{(n)}(\Lambda_1)d\Lambda_1 \end{aligned}\right\} \tag{125}$$

Then (50) will formally satisfy (48). The uniform convergence of this series will be proved by the method of dominants.

<u>Lemma</u>: Let $\Omega(\zeta)$ be an analytic function of the complex variable ζ, which is regular in the circle $|\zeta| \leq \Lambda_0$; then,

$$\left.\begin{aligned} &\left|\Omega(\zeta)\right| \leq \frac{2M\Lambda_0}{\Lambda_0 - |\zeta|} < \frac{2M\Lambda_0^2}{|\Lambda_0 - \zeta|^2} && (126) \\ &\left|\frac{d^n\Omega(\zeta)}{d\zeta^n}\right| \leq \frac{2n!M\ \Lambda_0}{\left(\Lambda_0 - |\zeta|\right)^{n+1}} \leq \frac{2(n+1)!M\Lambda_0^2}{|\Lambda_0 - \zeta|^{n+2}} && (127) \end{aligned}\right\} 0 \leq \zeta < \lambda_0, \text{ i.e., } \zeta \text{ real and positive}$$

where

$$M = \max\left|f(\zeta)\right| \quad \text{for} \quad |\zeta| = \Lambda_0 \tag{128}$$

The proof of this lemma follows immediately from Cauchy's formula

$$\Omega(\zeta) = \frac{1}{2\pi i} \int_{|\zeta| = \Lambda_0} \frac{\Omega(\zeta_1)d\zeta_1}{\zeta_1 - \zeta} \tag{129}$$

and the fact that

$$\left|\frac{\Lambda_0}{\Lambda_0 - \zeta}\right| \geq 1 \quad \text{for } \zeta \text{ real and positive} \tag{130}$$

In the following Ω will be considered only for real non-negative values of ζ; that is, Ω will be taken as a function of Λ; $0 \leq \Lambda < \Lambda_0$. This restriction on Λ will be understood for the remainder of the proof unless the contrary be stated.

Let

$$\tilde{\Omega}(\Lambda) = \frac{2M\Lambda_0^2}{(\Lambda_0 - \Lambda)^3} \tag{131}$$

Equations (126), (127) may then be written in the form

$$\left|\Omega(\Lambda)\right| \leq \tilde{\Omega}(\Lambda) \tag{132}$$

$$\left|\frac{d^n\Omega(\Lambda)}{d\Lambda^n}\right| \leq \frac{d^n\tilde{\Omega}(\Lambda)}{d\Lambda^n} \tag{133}$$

respectively. By definition, if (132) and (133) hold, $\tilde{\Omega}$ is a dominant of Ω, which fact will be symbolized by $\tilde{\Omega} \gg \Omega$ or $\Omega \ll \tilde{\Omega}$.

If $\tilde{E}^{(1)}(\Lambda)$ is given by

$$\tilde{E}^{(1)}(\Lambda) = \int_0^{\Lambda} \tilde{\Omega}(\Lambda_1)d\Lambda_1 \tag{134}$$

Then

$$\left|E^{(1)}(\Lambda)\right| = \left|\int_0^{\Lambda} \Omega(\Lambda_1)d\Lambda_1\right| \leq \int_0^{\Lambda} \tilde{\Omega}(\Lambda_1)d\Lambda_1 \leq \tilde{E}^{(1)}(\Lambda) \tag{135}$$

and also

$$\left|\frac{d^n E^{(1)}}{d\Lambda^n}\right| \leq \frac{d^n \tilde{E}^{(1)}(\Lambda)}{d\Lambda^n} \tag{136}$$

Thus

$$E^{(1)}(\Lambda) \ll \tilde{E}^{(1)}(\Lambda) \tag{137}$$

Suppose, now, that

$$\tilde{E}^{(n+1)}(\Lambda) = \int_0^{\Lambda} \left[\tilde{E}_{\Lambda\Lambda}^{(n)}(\Lambda_1) + \tilde{\Omega}(\Lambda)\tilde{E}^{(n)}(\Lambda_1)\right] d\Lambda_1 + \tilde{H}^{(n)}(\Lambda) \tag{138}$$

where

$$E^{(n)} \ll \tilde{E}^{(n)} \tag{139}$$

$$0 \ll \tilde{H}^{(n)} \tag{140}$$

Then, it follows immediately that

$$\left|E^{(n+1)}(\Lambda)\right| \leq \tilde{E}^{(n+1)}(\Lambda) \tag{141}$$

$$\left|\frac{dE^{(n+1)}(\Lambda)}{d\Lambda}\right| \leq \frac{d\tilde{E}^{(n+1)}(\Lambda)}{d\Lambda} \tag{142}$$

and by considering the corresponding derivatives of $\tilde{E}_{\Lambda\Lambda}^{(n)} + \tilde{\Omega}\tilde{E}^{(n)}$ in comparison with $-(E_{\Lambda\Lambda}^{(n)} + \Omega E^{(n)})$ it follows that:

$$E^{(n+1)} \ll \tilde{E}^{(n+1)} \tag{143}$$

which completes the proof by induction.

If, now, $\tilde{H}^{(n)}$ is given by

$$\tilde{H}^{(n)} = \frac{c_n \Lambda_0^{\,2} M}{\Lambda_0}\left[\frac{1}{\Lambda_0 - \Lambda} - \frac{1}{\Lambda_0}\right] \gg 0 \tag{144}$$

where c_n is some conveniently chosen positive constant (to be determined later). Then an explicit expression may be obtained for $\tilde{E}^{(n)}(\Lambda)$,

$$\left.\begin{aligned} \tilde{E}^{(1)}(\Lambda) &= \int_0^{\Lambda} \tilde{\Omega}(\Lambda_1)d\Lambda_1 = \left[\frac{1}{\Lambda_0 - \Lambda} - \frac{1}{\Lambda_0}\right]\Lambda_0^{\,2}M \\ \tilde{E}^{(n)}(\Lambda) &= c_n\left[\frac{1}{(\Lambda_0 - \Lambda)^n} - \frac{1}{\Lambda_0^{\,n}}\right] \end{aligned}\right\} \quad (145)$$

It is then seen that

$$c_1 = \Lambda_0^{\,2}\,M \tag{146}$$

to obtain the recurrence relations holding between the c_m, write

$$\tilde{E}^{(n+1)}(\Lambda) = \int_0^{\Lambda} c_n\left(\frac{(n+1)n}{(\Lambda_0 - \Lambda_1)^{n+2}} + \frac{\Lambda_0^{\,2}\,M}{(\Lambda_0 - \Lambda_1)^{n+2}} - \frac{\Lambda_0^{\,2}\,M}{(\Lambda_0 - 1)^2\Lambda_0^{\,n}}\right)d\Lambda_1 + \tilde{H}^{(n)}(\Lambda) \quad (147)$$

and employ (144), so that

$$c_{n+1} = c_n\,\frac{[n(n+1) + \Lambda_1^{\,2}M]}{(n+1)} \tag{148}$$

Note that

$$c_n \leq M^*(n+1) \tag{149}$$

where M^* is some conveniently chosen constant.

To complete the proof for the uniform convergence of

$V_1(\xi,\eta)$: $f(\xi)$ is assumed to be a differentiable function and therefore there exists a constant, say, M_2, such that

$$\left|f(\xi)\right| \leq M_2, \quad \text{for} \quad \left|\xi\right| < \xi_2 \tag{150}$$

then

$$\left|f^{[n]}(\zeta)\right| \leq \frac{M_2\zeta^n}{n!} \quad \text{for} \quad \left|\zeta\right| < \zeta_2 \tag{151}$$

Consequently, from (51) it may be seen that

$$V_1(\xi,\eta) \ll M_2\left[1 + \frac{2\left|\xi\right| M^*2!}{(\Lambda_0 - \Lambda)} + \ldots + \frac{2\left|\xi\right|^n M^*(n+1)! + \ldots}{n!(\Lambda_0 - \Lambda)^n}\right] \tag{152}$$

which will converge if

$$\frac{\left|\xi\right|}{\Lambda_0 - \Lambda} < 1 \tag{153}$$

so that the series $V_1(\xi,\eta)$ converges uniformly in the domain (153). The same may be said for the series $\partial^2 V_1/\partial\xi\partial\eta$; hence the series for $V_1(\xi,\eta)$ may be differentiated termwise and therefore the formal solution (50) is actually a solution of (48) in the domain (153).

The same also holds for $V_2(\xi,\eta)$, but here the domain (153) has to be replaced by

$$\frac{\left|\eta\right|}{\left|\Lambda_0 - \Lambda\right|} < 1 \tag{154}$$

Therefore $V(\xi,\eta)$ represents a solution of (48) in the intersection of (153) and (154). (See fig. 10.) As has been pointed out in section III, this theorem cannot be applied directly to equation (47) as F_1 given by (45) has a pole for $\Lambda = 0$. In some cases, however, it is possible to overcome this difficulty by shifting the origin. Let a be a positive number and

$$\left.\begin{aligned} \xi^* &= \xi - a/2 \\ \eta^* &= \eta - a/2 \end{aligned}\right\} \tag{155}$$

so that Λ^* will mean

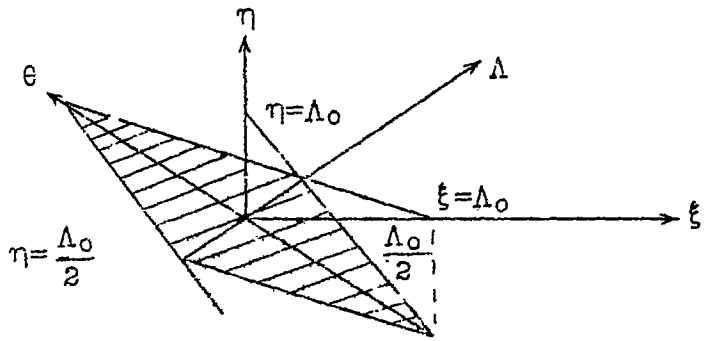

Figure 10.

$$\Lambda^* = \Lambda - a \tag{156}$$

Equation (47) then assumes the form

$$W_{\xi^*\eta^*} + F_2(\xi^*,\eta^*)\ W = 0 \tag{157}$$

where

$$\left.\begin{aligned} W(\xi^*,\eta^*) &= V\left(\xi^* + \frac{a}{2},\ \eta^* + \frac{a}{2}\right) \\ F_2(\Lambda^*) &= F_1(\Lambda^* + a) \end{aligned}\right\} \tag{158}$$

so that F_2 is analytic for $\Lambda^* = 0$.

The corresponding changes in $E^{(n)}(\Lambda)$ will be indicated by writing $\underline{E}^{(n)}(\Lambda)$, thus

$$\left.\begin{aligned} E^{(1)}(\Lambda^*) &= -\int_0^{\Lambda} F_2(\Lambda_1)d\Lambda_1 = -\int_a^{\Lambda} F_1(\Lambda_1)d\Lambda_1 = \underline{E}_1(\Lambda) \\ E^{(n+1)}(\Lambda^*) &= -\int_0^{\Lambda}\left[E^{(n)}_{\Lambda^*\Lambda^*} + F_2E^{(n)}\right]d\Lambda_1 \\ &= -\int_0^{\Lambda}\left[\underline{E}^{(n)}_{\Lambda\Lambda} + F_1\underline{E}^{(n)}\right]d\Lambda_1 \\ &= \underline{E}^{(n+1)}(\Lambda) \end{aligned}\right\} \tag{159}$$

The domain of convergence is merely shifted.

It is desirable to have explicit formulas for the $\underline{E}^{(n)}$ and their derivatives, as these will be employed in computation; if n is given the values $n = 1,2,3,4$, in (159), then

$$\underline{E}^{(1)}(\Lambda) = -\int_a^{\Lambda} F_1(\Lambda_1)d\Lambda_1 \tag{160}$$

$$\underline{E}^{(2)}(\Lambda) = F_1(\Lambda) - F_1(a) + \frac{1}{2}(\underline{E}^{(1)}(\Lambda))^2 \tag{161}$$

$$\begin{aligned}\underline{E}^{(3)}(\Lambda) = {} & F_1(\Lambda)\,\underline{E}^{(1)}(\Lambda) - \frac{\partial F_1(\Lambda)}{\partial\Lambda} + \frac{\partial F_1(a)}{\partial\Lambda} \\ & - \int_a^{\Lambda} F_1{}^2(\Lambda_1)d\Lambda_1 - F_1(a)\underline{E}^{(1)}(\Lambda) + \frac{1}{6}(\underline{E}^{(1)}(\Lambda))^3\end{aligned} \tag{162}$$

$$\begin{aligned}\underline{E}^{(4)}(\Lambda) = {} & -\left(\frac{\partial\underline{E}^{(3)}(\Lambda)}{\partial\Lambda} - \frac{\partial\underline{E}^{(3)}(a)}{\partial\Lambda}\right) + \underline{E}^{(1)}(\Lambda)\,\underline{E}^{(3)}(\Lambda) \\ & + \underline{E}^{(1)}(\Lambda)\,\frac{\partial\underline{E}^{(2)}(\Lambda)}{\partial\Lambda} + \frac{1}{2}(F_1{}^2(\Lambda) - F_1{}^2(a)) \\ & - \frac{1}{2}(\underline{E}^{(1)}(\Lambda))^2\,\underline{E}^{(2)} + \frac{1}{8}(\underline{E}^{(1)}(\Lambda))^4 \\ & + \frac{1}{2}(\underline{E}^{(1)}(\Lambda))^2 F_1(\Lambda)\end{aligned} \tag{163}$$

where

$$\frac{\partial\underline{E}_1(\Lambda)}{\partial\Lambda} = -F_1(\Lambda) \tag{164}$$

$$\frac{\partial\underline{E}^{(2)}(\Lambda)}{\partial\Lambda} = \frac{\partial F_1(\Lambda)}{\partial\Lambda} - F_1(\Lambda)\underline{E}^{(1)}(\Lambda) \tag{165}$$

$$\frac{\partial \underline{E}^{(3)}(\Lambda)}{\partial \Lambda} = - F_1(\Lambda)\underline{E}^{(2)}(\Lambda) - \frac{\partial^2 F_1(\Lambda)}{\partial \Lambda^2} - \frac{\partial F_1(\Lambda)\underline{E}^{(1)}(\Lambda)}{\partial \Lambda} - F_1{}^2(\Lambda) \tag{166}$$

$$\frac{\partial \underline{E}^{(4)}(\Lambda)}{\partial \Lambda} = - F_1(\Lambda)\underline{E}^{(3)}(\Lambda) + \frac{\partial^3 F_1(\Lambda)}{\partial \Lambda^3} - \frac{\partial^2 F_1(\Lambda)\underline{E}^{(1)}(\Lambda)}{\partial \Lambda^2} + \frac{\partial F_1(\Lambda)\underline{E}^{(2)}(\Lambda)}{\partial \Lambda} + \frac{3\partial F_1(\Lambda)}{\partial \Lambda} F_1(\Lambda) + F_1 \frac{\partial \underline{E}^{(2)}(\Lambda)}{\partial \Lambda} \tag{167}$$

Explicit formulas for some of these quantities as a function of B are given below; $F_1(B)$ is defined in (45); $B(a)$ is the value of B corresponding to $\Lambda = a$.

$$\underline{E}^{(1)}(\Lambda) = \frac{k+1}{16}\left[\frac{5}{3} B^{-3} + \frac{2k}{(k+1)} B^{-1} \quad \frac{(1-3k)}{(k-1)} B - \frac{8}{h(k+1)^2(k-1)} \tan^{-1} hB\right]_{B(a)}^{B} \tag{168}$$

$$\frac{\partial F_1(\Lambda)}{\partial \Lambda} = - \left(\frac{k+1}{128}\right)\left[30(k+1)B^{-7}+48kB^{-5}+2(6k-14)B^{-3}+2(3k-1)B\right] \times \left[\frac{(1+h^2B^2)(1+B^2)}{B^2(1-h^2)}\right] \tag{169}$$

$$\int_{a}^{\Lambda} F_1^2(\Lambda_1)d\Lambda_1 = \frac{k+1}{1024}\left[-\frac{25}{9}(k+1)^2 - 10k(k+1)B^{-7}\right.$$

$$-\frac{(39k^2-80k-15)}{5}B^{-5} + \frac{4(11k^3+46k^2+59k+20)}{3(k+1)}B^{-3}$$

$$-\frac{(91-70k-151k^2+52k^3+133k^4-14k^5-41k^6)}{(k+1)^2(k-1)^2}B^{-1}$$

$$+\frac{(1-3k)(16+6k-12k^2-2k^3)}{(k-1)^2}B$$

$$\left.+\frac{(k+1)(1-3k)^2}{3(k-1)}B^3 + \frac{128}{h(k+1)^3(k-1)^2}\tan^{-1} hB\right]_{B(a)}^{B} \quad (170)$$

Remark: Sometimes the range of variability of the speed is comparatively small. In these instances it is useful to replace F by a constant, say F_o. Equation (43) then becomes

$$\frac{\partial^2 V}{\partial\xi\partial\eta} + F_o V = 0$$

and its solutions can be written in the form

$$V(\xi,\eta) = \int_{t=-1}^{t=1}\left\{\cos\left[\frac{2t(\xi\eta)^{1/2}}{F_o}\right]\right\}\left\{f\left[\frac{\xi}{F_o}\frac{(1-t^2)}{2}\right]\right.$$

$$\left.+ g\left[\frac{\eta}{F_o}\frac{(1-t^2)}{2}\right]\right\}\frac{dt}{(1-t^2)^{1/2}}$$

where f and g are two arbitrary, twice continuously differentiable functions of one variable.

APPENDIX IV

CONVERGENCE OF THE SERIES OBTAINED AS SOLUTIONS OF (85)

The convergence of the series (86) or (87), which have been obtained as solutions of (85) may be demonstrated as follows:

Let

$$e^{2\lambda} = z \tag{171}$$

the half plane $\mathrm{Re}(\lambda) < 0$ then corresponds to the circle $|z| < 1$.

Since

$$\left.\begin{aligned} \frac{dU}{d\lambda} &= \frac{dU}{dz}\frac{dz}{d\lambda} = 2e^{2\lambda}\frac{dU}{dz} = 2z\frac{dU}{dz} \\ &\text{and} \\ \frac{d^2U}{d\lambda^2} &= \frac{dz}{d\lambda}\frac{d}{dz}\left(\frac{dU}{d\lambda}\right) = 2e^{2\lambda}\frac{d}{dz}\left(2z\frac{dU}{dz}\right) = 4z\left(z\frac{d^2U}{dz^2} + \frac{dU}{dz}\right) \end{aligned}\right\} \tag{172}$$

the differential equation (85) may be written in the form

$$z^2\frac{d^2U}{dz^2} + z\frac{dU}{dz} + \left(F - \frac{\nu^2}{4}\right)U \tag{173}$$

Since $F - \frac{\nu^2}{4}$ is a polynomial in $z = e^{2\lambda}$, the point $z = 0$ is a regular singular point of the differential equation (173). See reference 14, where it is also shown (in sec. 10.13) that the general solution of (173) may be expressed in the following form, provided ν is not an integer.

$$U = c_1U_1 + c_2U_2 \tag{174}$$

where c_1 and c_2 are arbitrary constants and

$$U_1 = z^{\nu/2}\left\{1 + \sum_{n=1}^{\infty} \alpha_n z^n\right\} \tag{175}$$

$$U_2 = z^{\nu/2}\left\{1 + \sum_{n=1}^{\infty} \beta_n z^n\right\} \tag{176}$$

where the α_n, β_n are properly chosen constants. Since the only (finite) singular point of equation (173) is at $z=0$, the theory presented in reference 14, section 10.13, shows that the series converges for all values of z.

However, if ν is an integer, as in the case under consideration, the above-mentioned method fails; the series (174) may be retained, but, as shown in section 10.15 of reference 14, the series (176) must be replaced by

$$U_2^* = U_1\left\{\sum_{n=0}^{\nu-1} \frac{\gamma_n z^{n-\nu}}{n-\nu} + \gamma_\nu \log z + \sum_{n=\nu+1}^{\infty} \frac{\gamma_n z^{n-\nu}}{n-\nu}\right\} \tag{177}$$

where the γ_ν are properly chosen constants. Therefore, in the case under consideration, the general solution of (173) valid for all z, will be of the form:

$$U = c_1U_1 + c_2U_2^* \tag{178}$$

It is seen that, by replacing z by $e^{2\lambda}$, (175) and (177) will assume the forms given in (87); the factor λ in the first term of the second series of (87) arises from the logarithmic term in (177).

Since the expansions (175) and (177) are valid for all z, in particular for $|z| < 1$, the expansion (87) will be valid for $|e^{2\lambda}| < 1$; that is, $\mathrm{Re}(\lambda) < 0$.

REFERENCES

1. Bergman, Stefan: A Formula for the Stream Function of Certain Flows. Proc. Nat. Acad. Sci., vol. 29, no. 9, Sept. 1943, pp. 276–281.

2. Bergman, Stefan: The Hodograph Method in the Theory of Compressible Fluid. Suppl. to Fluid Dynamics by R. von Mises and K. Friedrichs. Brown Univ., (Providence, R. I.), 1942.

3. Bergman, Stefan: On Two-Dimensional Flows of Compressible Fluids. NACA TN No. 972, 1945.

4. Bergman, Stefan: Graphical and Analytical Methods for the Determination of a Flow of a Compressible Fluid around an Obstacle. NACA TN No. 973, 1945.

5. Bergman, Stefan: Methods for the Determination and Computation of Flow Patterns of a Compressible Fluid. NACA TN No. 1018, 1946.

6. Chaplygin, S. A.: On Gas Jets. Scientific Memoirs, Moscow Univ., Math Phys. Sec., vol. 21, 1902, pp. 1–121 (Eng. trans., pub. by Brown Univ., 1944.) (Also NACA TM No. 1063, 1944)

7. von Kármán, Th.: Compressibility Effects in Aerodynamics. Jour. Aero. Sci., vol. 8, no. 9, July 1941, pp. 337–352.

8. Tsien, Hsue-Shen: Two-Dimensional Subsonic Flow of Compressible Fluids. Jour. Aero. Sci., vol. 6, no. 10, Aug. 1939, pp. 399–407.

9. Tricomi, F.: Sulle Equazione alle Derivate Parziali di 2° Ordine di Typo Misto. Memorie della R. Accademia Nazionale dei Lincei. Ser. V, vol. 14, 1923.

10. Bergman, Stefan: Mehrdeutige Lösungen bei Potentialströmungen mit freien Grenzen. Z.f.a.M.M., vol. 12, 1932, pp. 95–121.

11. Thiry, René: Sur les solutions multiples des problèmes d'hydrodynamique relatives aux movements glissants. Annales de l'Ecole Normale, Ser. III, 38, 1921, pp. 229–339.

12. Bergman, Stefan: The Approximation of Functions Satisfying a Linear Partial Differential Equation. Duke Math. Jour., vol. 6, 1940, pp. 537–561.

13. Hurwitz, A., and Courant, R.: Vorlesungen über Allgemeine Funktionentheorie. 3d ed., Julius Springer (Berlin), 1929.

14. Copson, E. T.: Functions of a Complex Variable. The Clarendon Press (Oxford), 1935.

15. von Mises, R. E.: Theory of Flight. McGraw-Hill Book Co., Inc., 1945.

BIBLIOGRAPHY

Bers, L., and Gelbart, A.: On a Class of Differential Equations in Mechanics of Continua. Quarterly of Appl. Math., vol. 1, no. 2, July 1943, pp. 168–188.

Garrick, I. E., and Kaplan, Carl: On the Flow of a Compressible Fluid by the Hodograph Method. II – Fundamental Set of Particular Flow Solution of the Chaplygin Differential Equation. NACA ARR No. L4129, 1944.

Kraft, Hans, and Dibble, C. G.: Some Two-Dimensional Adiabatic Compressible Flow Patterns. Jour. Aero. Sci., vol. 11, Oct. 1944, pp. 283–298.

Milne-Thomson, L. M.: Theoretical Hydrodynamics. McMillan and Co. (London), 1938.

Tamarkin, J. O., and Feller, Willy: Partial Differential Equations. Brown Univ. (Providence, R. I.), 1941.

Theodorsen, Theodore: Theory of Wing Sections of Arbitrary Shape. NACA Rep. No. 411, 1931.

von Mises, Richard, Friedrichs, Kurt, and Bergman, Stefan: Fluid Dynamics. Brown Univ., 1941 and 1942.

Table 1

T and T^{-1} as functions of $e^{2\lambda}$

If $T = \sum_{n=0}^{\infty} a_n e^{2n\lambda}$ and $T^{-1} = \sum_{n=0}^{\infty} b_n e^{2n\lambda}$

then

n	$-a_n$	b_n
0	-1.0000	1.0000
1	0.2392	0.2392
2	0.1087	0.1659
3	0.0658	0.1315
4	0.0456	0.1108
5	0.0342	0.0968
6	0.0270	0.0865
7	0.0220	0.0786
8	0.0185	0.0724
9	0.0158	0.0672
10	0.0138	0.0629

Table 2

The Coefficients of the Series Expansion

of F in Powers of $e^{2n\lambda}$

$$F = \sum_{n=0}^{\infty} C_n e^{2n\lambda}$$

$C_o = 0.0000$

$C_1 = 0.0000$

$C_2 = 0.1373$

$C_3 = 0.2858$

$C_4 = 0.4333$

$C_5 = 0.6073$

$C_6 = 0.7241$

$C_7 = 0.8678$

$C_8 = 1.011$

$C_9 = 1.153$

Table 3

The corresponding values of M, T, τ, q/a_o, λ

for subsonic values of M

M	T	τ	q/a_o	$-\lambda$
0.00	1.0000	0.0000	0.0000	$+\infty$
0.05	0.9988	0.0005	0.0500	2.6282
0.10	0.9950	0.0020	0.1000	1.9376
0.15	0.9887	0.0045	0.1497	1.5364
0.20	0.9798	0.0079	0.1993	1.2548
0.25	0.9683	0.0124	0.2485	1.0396
0.30	0.9539	0.0177	0.2973	0.8667
0.35	0.9368	0.0239	0.3458	0.7240
0.40	0.9165	0.0311	0.3938	0.6036
0.45	0.8930	0.0390	0.4416	0.5006
0.50	0.8660	0.0476	0.4880	0.4120
0.51	0.8602	0.0496	0.4972	0.3956
0.52	0.8542	0.0513	0.5065	0.3798
0.53	0.8480	0.0532	0.5162	0.3644
0.54	0.8417	0.0551	0.5249	0.3495
0.55	0.8352	0.0569	0.5336	0.3350
0.56	0.8285	0.0592	0.5432	0.3208
0.57	0.8216	0.0610	0.5524	0.3071
0.58	0.8146	0.0630	0.5614	0.2938
0.59	0.8074	0.0651	0.5705	0.2808
0.60	0.8000	0.0672	0.5795	0.2682
0.61	0.7924	0.0693	0.5885	0.2560
0.62	0.7846	0.0714	0.5975	0.2440
0.63	0.7766	0.0735	0.6064	0.2325
0.64	0.7684	0.0757	0.6153	0.2212
0.65	0.7599	0.0779	0.6242	0.2098
0.66	0.7513	0.0801	0.6330	0.1996
0.67	0.7423	0.0824	0.6418	0.1892
0.68	0.7332	0.0847	0.6506	0.1793
0.69	0.7238	0.0870	0.6593	0.1696
0.70	0.7141	0.0893	0.6680	0.1600
0.71	0.7042	0.0916	0.6767	0.1510
0.72	0.6940	0.0939	0.6854	0.1421
0.73	0.6835	0.0963	0.6939	0.1346
0.74	0.6726	0.0987	0.7025	0.1252

Table 3 (cont'd)

M	T	τ	q/a_o	$-\lambda$
0.75	0.6615	0.1011	0.7111	0.1171
0.76	0.6499	0.1036	0.7196	0.1093
0.77	0.6380	0.1060	0.7280	0.1018
0.78	0.6258	0.1085	0.7365	0.0944
0.79	0.6131	0.1120	0.7448	0.0875
0.80	0.6000	0.1135	0.7532	0.0807
0.81	0.5864	0.1160	0.7616	0.0742
0.82	0.5724	0.1185	0.7699	0.0680
0.83	0.5578	0.1211	0.7718	0.0618
0.84	0.5426	0.1237	0.7864	0.0560
0.85	0.5268	0.1263	0.7945	0.0505
0.86	0.5103	0.1289	0.8027	0.0452
0.87	0.4931	0.1315	0.8108	0.0402
0.88	0.4750	0.1341	0.8189	0.0354
0.89	0.4560	0.1368	0.8269	0.0328
0.90	0.4359	0.1394	0.8349	0.0266
0.91	0.4146	0.1421	0.8429	0.0225
0.92	0.3919	0.1448	0.8507	0.0188
0.93	0.3676	0.1475	0.8587	0.0153
0.94	0.3412	0.1502	0.8666	0.0120
0.95	0.3123	0.1530	0.8744	0.0091
0.96	0.2800	0.1556	0.8821	0.0065
0.97	0.2431	0.1584	0.8892	0.0042
0.98	0.1990	0.1611	0.8976	0.0023
0.99	0.1411	0.1639	0.9053	0.0008
1.00	0.0000	0.1667	0.9129	0.0000

Table 4

The corresponding values of M, B, τ, q/a_o, β

for supersonic values of M

M	B	τ	q/a_o	β
1.00	0.0000	0.1667	0.9129	0.0000
1.01	0.1418	0.1695	0.9205	0.0008
1.02	0.2010	0.1722	0.9280	0.0020
1.03	0.2468	0.1750	0.9355	0.0039
1.04	0.2857	0.1779	0.9430	0.0061
1.05	0.3202	0.1807	0.9504	0.0085
1.06	0.3516	0.1835	0.9578	0.0110
1.07	0.3807	0.1863	0.9652	0.0140
1.08	0.4079	0.1892	0.9725	0.0169
1.09	0.4337	0.1920	0.9798	0.0200
1.10	0.4583	0.1949	0.9870	0.0235
1.11	0.4818	0.1977	0.9941	0.0268
1.12	0.5044	0.2006	1.0014	0.0304
1.13	0.5262	0.2054	1.0086	0.0339
1.14	0.5474	0.2063	1.0156	0.0376
1.15	0.5679	0.2092	1.0226	0.0415
1.16	0.5879	0.2120	1.0297	0.0455
1.17	0.6074	0.2149	1.0367	0.0494
1.18	0.6264	0.2178	1.0436	0.0535
1.19	0.6451	0.2207	1.0505	0.0577
1.20	0.6633	0.2236	1.0574	0.0618
1.25	0.7500	0.2381	1.0911	0.0845
1.30	0.8307	0.2526	1.1238	0.1075
1.35	0.9069	0.2671	1.1557	0.1319
1.40	0.9798	0.2816	1.1866	0.1567
1.45	1.0500	0.2900	1.2166	0.1819
1.50	1.1180	0.3104	1.2457	0.2078
1.55	1.1843	0.3257	1.2739	0.2382
1.60	1.2490	0.3386	1.3012	0.2590
1.65	1.3124	0.3525	1.3277	0.2779
1.70	1.3748	0.3663	1.3533	0.3108
1.75	1.4361	0.3798	1.3781	0.3375
1.80	1.4967	0.3932	1.4021	0.3618
1.85	1.5564	0.4064	1.4254	0.3859

Table 4 (cont'd)

q/a_o	M	B	τ	β
1.00	1.1180	0.5000	0.2000	0.0350
1.05	1.1892	0.6437	0.2205	0.0677
1.10	1.2635	0.7722	0.2420	0.1058
1.15	1.3409	0.8934	0.2645	0.1483
1.20	1.4221	1.0112	0.2880	0.1945
1.25	1.5076	1.1282	0.3150	0.2440
1.30	1.5978	1.2462	0.3380	0.2965
1.35	1.6935	1.3667	0.3645	0.3519
1.40	1.7955	1.4912	0.3920	0.4100
1.45	1.9048	1.6211	0.4205	0.4709
1.50	2.0226	1.7581	0.4500	0.5345
1.55	2.1505	1.8038	0.4805	0.5556
1.60	2.2904	2.0606	0.5120	0.6707
1.65	2.4448	2.2309	0.5445	0.7436
1.70	2.6170	2.4184	0.5780	0.8201
1.75	2.8113	2.6274	0.6125	0.9006
1.80	3.0339	2.8644	0.6480	0.9856
1.85	3.2936	3.1381	0.6845	1.0759
1.90	3.6035	3.3620	0.7220	1.1440
1.95	3.9846	3.8570	0.7605	1.2768
2.00	4.4721	4.3589	0.8000	1.3908
2.05	5.1330	5.0347	0.8405	1.5180
2.10	6.1133	6.0310	0.8820	1.6634
2.15	7.8247	7.7605	0.9245	1.8401
2.20	12.2984	12.2577	0.9680	2.0626
$\sqrt{5}$	∞	∞	1.0000	∞

Table 5

Auxiliary Functions for Computation of $Q^{(n)}$

T	M	F	F_λ	$\int_{\lambda=-\infty}^{\lambda=0} F^2\, d\lambda$	$\frac{d\lambda}{dT}$
0.00	1.0000	$-\infty$	$+\infty$	$+\infty$	0.0000
0.05	0.9998	-9.5664×10^{7}	1.6676×10^{12}	8.1489×10^{12}	-0.0021
0.10	0.9950	-1.4791×10^{6}	3.1723×10^{9}	1.5661×10^{10}	-0.0084
0.15	0.9887	-1.2751×10^{5}	8.0345×10^{7}	3.9617×10^{8}	-0.0193
0.20	0.9798	-2.2109×10^{4}	5.8077×10^{6}	2.8547×10^{7}	-0.0350
0.25	0.9682	-5.5969×10^{3}	7.4153×10^{5}	3.6210×10^{6}	-0.0561
0.30	0.9539	-1.7922×10^{3}	1.3497×10^{5}	6.5149×10^{5}	-0.0837
0.35	0.9368	-6.7198×10^{2}	3.1214×10^{4}	1.4797×10^{5}	-0.1188
0.40	0.9135	-2.8144×10^{2}	8.5565×10^{3}	3.9545×10^{4}	-0.1631
0.45	0.8931	-1.2759×10^{2}	2.6553×10^{3}	1.1903×10^{4}	-0.2190
0.50	0.8660	-6.1200×10	9.0293×10^{2}	3.9424×10^{3}	-0.2899
0.55	0.8352	-3.0505×10	3.2813×10^{2}	1.4400×10^{3}	-0.3806
0.60	0.8000	-1.5558×10	1.2482×10^{2}	6.0366×10^{2}	-0.4987
0.65	0.7599	-7.9987	4.8769×10	3.1232×10^{2}	-0.6559
0.70	0.7141	-4.0789	1.9195×10	2.0784×10^{2}	-0.8719
0.75	0.6615	-2.0215	7.4369	1.6904×10^{2}	-1.1823
0.80	0.6000	-0.9453	2.7472	1.5337×10^{2}	-1.6584
0.85	0.5267	-0.3964	1.1827	1.4562×10^{2}	-2.4667
0.90	0.4358	-0.1336	0.2477	1.4039×10^{2}	-4.1071
0.95	0.3120	-0.0257	0.0383	1.3587×10^{2}	-9.0795
1.00	0.0000	+0.0000	0.0000	1.3150×10^{2}	$-\infty$

Table 6

The values of $\frac{df}{d\xi^*}$ and $f^{[n]}$ (ξ^*), n = 0, 1, 2, 3, 4.

ξ^*	$\frac{df}{d\xi^*}$	$f(\xi^*)$	$10f^{[1]}$	$f^{[2]}$	$f^{[3]}$	$f^{[4]}$
0.0000	20.0000	1.0000	0.00000	0.0000	0.0000	0.0000
0.0025	20.5000	1.0506	0.00256	0.0003	0.0000	0.0000
0.0050	21.0000	1.1025	0.00525	0.0012	0.0000	0.0000
0.0100	22.0000	1.2100	0.01103	0.0053	0.0002	0.0000
0.0150	23.0000	1.3225	0.01736	0.0124	0.0006	0.0000
0.0200	24.0000	1.4400	0.02426	0.0228	0.0015	0.0000
0.0300	26.0000	1.6900	0.03990	0.0546	0.0052	0.0003
0.0400	28.0000	1.9600	0.05813	0.1034	0.0129	0.0012
0.0500	30.0000	2.2500	0.07917	0.1718	0.0265	0.0031
0.0600	32.0000	2.5600	0.10320	0.2628	0.0481	0.0068
0.0700	34.0000	2.8900	0.13043	0.3793	0.0799	0.0131
0.0800	36.0000	3.2400	0.16107	0.5248	0.1249	0.0232
0.0900	38.0000	3.6100	0.19530	0.7026	0.1852	0.0386
0.1000	40.0000	4.0000	0.23333	0.9166	0.2666	0.0611
0.1100	42.0000	4.4100	0.27537	0.1170	0.3706	0.0927
0.1200	44.0000	4.8400	0.32160	0.1468	0.5022	0.1361

Table 7

The Values of $\varepsilon^{(n)}$ n = 1,2,3,4

Λ^*	B	H	$\varepsilon^{(1)}$	$\varepsilon^{(2)}$	$\varepsilon^{(3)}$	$\varepsilon^{(4)}$
0.0000	1.0000	1.0000	0.0000	0.0000	0.0000	0.0000
0.0025	1.0040	0.9970	-0.0007	-0.0180	-0.1700	-2.5000
0.0050	1.0080	0.9940	-0.0012	-0.0360	-0.3300	-4.8000
0.0075	1.0118	0.9910	-0.0016	-0.0530	-0.4800	-6.8000
0.0100	1.0156	0.9880	-0.0019	-0.0700	-0.6200	-8.6000
0.0150	1.0230	0.9825	-0.0027	-0.1000	-0.8700	-11.6500
0.0200	1.0300	0.9757	-0.0032	-0.1290	-1.1300	-14.7500
0.0250	1.0365	0.9700	-0.0036	-0.1560	-1.4000	-17.6600
0.0300	1.0427	0.9650	-0.0040	-0.1880	-1.6700	-20.6000
0.0400	1.0560	0.9545	-0.0047	-0.2400	-2.1100	-25.2000
0.0500	1.0690	0.9440	-0.0042	-0.2910	-2.4700	-29.2700
0.0600	1.0813	0.9325	-0.0037	-0.3300	-2.7900	-33.1000
0.0700	1.0945	0.9210	-0.0023	-0.3710	-3.1500	-36.4000
0.0800	1.1075	0.9115	-0.0010	-0.4090	-3.4500	-39.4500
0.0900	1.1210	0.9010	+0.0007	-0.4430	-3.7000	-42.1600
0.1000	1.1335	0.8915	0.0028	-0.4740	-3.9400	-44.1900
0.1100	1.1467	0.8825	0.0053	-0.5060	-4.1200	-46.1000
0.1200	1.1610	0.8735	0.0080	-0.5310	-4.3000	-48.0000
0.1300	1.1735	0.8642	0.0110	-0.5570	-4.4630	-49.5000
0.1400	1.1850	0.8554	0.0143	-0.5840	-4.6150	-50.8000
0.1500	1.1972	0.8476	0.0181	-0.6100	-4.7500	-52.0300
0.1600	1.2110	0.8390	0.0219	-0.6310	-4.9000	-53.0500
0.1700	1.2235	0.8295	0.0260	-0.6500	-5.0200	-54.0000
0.1800	1.2368	0.8208	0.0300	-0.6700	-5.1400	-54.9000
0.1900	1.2496	0.8120	0.0349	-0.6880	-5.2450	-55.7200
0.2000	1.2615	0.8040	0.0398	-0.7060	-5.3370	-56.6200
0.2100	1.2732	0.7960	0.0443	-0.7250	-5.4200	-57.4000
0.2200	1.2856	0.7885	0.0493	-0.7420	-5.5100	-58.0800
0.2300	1.2980	0.7810	0.0547	-0.7560	-5.5950	-58.5500
0.2400	1.3117	0.7740	0.0603	-0.7710	-5.6720	-59.0000
0.2500	1.3255	0.7664	0.0668	-0.7860	-5.7400	-59.4500
0.2600	1.3370	0.7585	0.0727	-0.8000	-5.8050	-59.8500

Table 8

ξ^*	η^*	$2\Lambda^*$	$\theta=\frac{(\xi^*-\eta^*)}{2}$	$\frac{q}{B}\psi_q$	ψ_θ	$\left(\frac{\partial x}{\partial q}\right)_{\psi=\text{const.}}$	$\left(\frac{\partial y}{\partial q}\right)_{\psi=\text{const.}}$
0.0025	0.0000	0.0025	0.00125	0.3765	40.3770	+153.2134	0.1915
	0.0025	0.0050	0.00000	0.0000	40.7513	155.8900	0.0000
0.0050	0.0000	0.0050	0.00250	0.7488	40.7513	155.8369	0.3895
	0.0025	0.0075	0.00125	0.3722	41.1226	158.4820	0.1981
	0.0050	0.0100	0.00000	0.0000	41.4911	161.1307	0.0000
0.0100	0.0000	0.0100	0.00500	1.4801	41.4910	160.9235	0.8046
	0.0050	0.0150	0.00250	0.7317	42.2397	166.3993	0.4160
	0.0100	0.0200	0.00000	0.0000	42.9203	171.4925	0.0000
0.0150	0.0000	0.0150	0.00750	2.1950	42.2395	165.9949	1.2449
	0.0050	0.0200	0.00500	1.4447	42.9202	171.2956	0.8564
	0.0100	0.0250	0.00250	0.7138	43.6366	176.5320	0.4413
	0.0150	0.0300	0.00000	0.0000	44.3730	181.7387	0.0000
0.0200	0.0000	0.0200	0.01000	2.8893	42.9198	170.7048	1.7071
	0.0050	0.0250	0.00750	2.1415	43.6363	176.1484	1.3211
	0.0100	0.0300	0.00500	1.4116	44.3728	181.5518	0.9077
	0.0200	0.0400	0.00000	0.0000	45.7909	192.4503	0.0000
0.0300	0.0000	0.0300	0.01500	4.2344	44.3713	180.0566	2.7010
	0.0100	0.0400	0.01000	2.7592	45.7899	191.7377	1.9174
	0.0200	0.0500	0.00500	1.3483	47.1679	203.1159	1.0155
	0.0300	0.0600	0.00000	0.0000	48.4506	213.7738	0.0000
0.0400	0.0100	0.0500	0.01500	4.0446	47.1655	201.7565	3.0264
	0.0200	0.0600	0.01000	2.6317	48.4491	213.1260	2.1313
	0.0300	0.0700	0.00500	1.2846	49.6875	224.6336	1.1231
	0.0400	0.0800	0.00000	0.0000	50.9896	236.4134	0.0000
0.0600	0.0300	0.0900	0.01500	3.6830	52.1909	246.9304	3.7041
	0.0400	0.1000	0.01000	2.4008	53.4178	259.4997	2.5951
	0.0500	0.1100	0.00500	1.1746	54.6372	272.4613	1.3623
	0.0600	0.1200	0.00000	0.0000	55.8202	285.9281	0.0000
0.0800	0.0500	0.1300	0.01500	3.3715	56.9404	297.3904	4.4610
	0.0600	0.1400	0.01000	2.1978	58.0675	310.1456	3.1016
	0.0700	0.1500	0.00500	1.0759	59.2298	324.0247	1.6201
	0.0800	0.1600	0.00000	0.0000	60.3022	338.3378	0.0000
0.1000	0.0800	0.1800	0.01000	2.0111	62.2637	365.5425	3.6556
	0.0900	0.1900	0.00500	0.9830	63.2227	380.0431	1.9002
	0.1000	0.2000	0.00000	0.0000	64.2081	394.3472	0.0000
0.1100	0.0900	0.2000	0.01000	1.9229	64.2037	393.9469	3.9396
	0.1000	0.2100	0.00500	0.9401	65.1558	408.4695	2.0423
	0.1100	0.2200	0.00000	0.0000	66.1189	423.7961	0.0000
0.1200	0.1000	0.2200	0.01000	1.8391	66.1141	423.4159	4.2343
	0.1100	0.2300	0.00500	0.8996	67.0534	439.1157	2.1956
	0.1200	0.2400	0.00000	0.0000	68.0051	456.3483	0.0000

Table 9

The Values of M_1, M_2, M_3, M_4

ξ^*	η^*	$2\lambda^* = \xi^* + \eta^*$	M_1	M_2	M_3	M_4
0.0025	0.0000	0.0025	20.4992	-0.0005	0.0000	-19.9993
	0.0025	0.0050	20.4986	-0.0005	0.0005	-20.4986
0.0050	0.0000	0.0050	20.9984	-0.0011	0.0000	-19.9988
	0.0025	0.0075	20.9979	-0.0010	0.0004	-20.4981
	0.0050	0.0100	20.9975	-0.0009	0.0009	-20.9975
0.0100	0.0000	0.0100	21.9968	-0.0021	0.0000	-19.9981
	0.0050	0.0150	21.9955	-0.0018	0.0007	-20.9964
	0.0100	0.0200	21.9946	-0.0014	0.0014	-21.9946
0.0150	0.0000	0.0150	22.9945	-0.0031	0.0000	-19.9973
	0.0050	0.0200	22.9933	-0.0025	0.0006	-20.9957
	0.0100	0.0250	22.9923	-0.0020	0.0011	-21.9938
	0.0150	0.0300	22.9912	-0.0015	0.0015	-22.9912
0.0200	0.0000	0.0200	23.9919	-0.0039	0.0000	-19.9968
	0.0050	0.0250	23.9906	-0.0031	0.0004	-20.9951
	0.0100	0.0300	23.9892	-0.0024	0.0008	-21.9929
	0.0200	0.0400	23.9868	-0.0011	0.0011	-23.9868
0.0300	0.0000	0.0300	25.9847	-0.0051	0.0000	-19.9960
	0.0100	0.0400	25.9811	-0.0029	0.0002	-21.9915
	0.0200	0.0500	25.9797	-0.0008	-0.0000	-23.9862
	0.0300	0.0600	25.9788	+0.0009	-0.0009	-25.9788
0.0400	0.0100	0.0500	27.9719	-0.0025	-0.0002	-21.9915
	0.0200	0.0600	27.9702	+0.0001	-0.0010	-23.9859
	0.0300	0.0700	27.9701	+0.0030	-0.0028	-25.9793
	0.0400	0.0800	27.9701	+0.0056	-0.0056	-27.9701
0.0600	0.0300	0.0900	31.9443	+0.0108	-0.0061	-25.9812
	0.0400	0.1000	31.9457	+0.0147	-0.0100	-27.9732
	0.0500	0.1100	31.9483	+0.0185	-0.0153	-29.9635
	0.0600	0.1200	31.9520	+0.0215	-0.0215	-31.9520
0.0800	0.0500	0.1300	35.9163	+0.0356	-0.0204	-29.9716
	0.0600	0.1400	35.9217	+0.0405	-0.0284	-31.9617
	0.0700	0.1500	35.9289	+0.0454	-0.0382	-33.9505
	0.0800	0.1600	35.9369	+0.0499	-0.0499	-35.9369
0.1000	0.0800	0.1800	39.9019	0.0794	-0.0578	-35.9554
	0.0900	0.1900	39.9161	0.0853	-0.0731	-37.9444
	0.1000	0.2000	39.9304	0.0907	-0.0907	-39.9304
0.1100	0.0900	0.2000	41.8976	0.1048	-0.0775	-37.9578
	0.1000	0.2100	41.9109	0.1114	-0.0962	-39.9430
	0.1100	0.2200	41.9270	0.1169	-0.1169	-41.9270
0.1200	0.1000	0.2200	43.8898	0.1342	-0.1007	-39.9580
	0.1100	0.2300	43.9100	0.1407	-0.1223	-41.9458
	0.1200	0.2400	43.9309	0.1472	-0.1472	-43.9309

Table 10

The Values of V_1, V_2, V, $\psi_* = HV$

ξ^*	η^*	$2\Lambda^* = \xi^* + \eta^*$	V_1	V_2	V	ψ_*
0.0025	0.0000	0.0025	1.0506	-1.0000	0.0506	0.0504
	0.0025	0.0050	0.0000	0.0000	0.0000	0.0000
0.0050	0.0000	0.0050	1.1024	-0.0000	0.1024	0.1018
	0.0025	0.0075	1.1024	-1.0506	0.0518	0.0514
	0.0050	0.0100	0.0000	0.0000	0.0000	0.0000
0.0100	0.0000	0.0100	1.2099	-1.0000	0.2099	0.2074
	0.0050	0.0150	1.2099	-1.1024	0.1074	0.1056
	0.0100	0.0200	0.0000	0.0000	0.0000	0.0000
0.0150	0.0000	0.0150	1.3224	-1.0000	0.3224	0.3168
	0.0050	0.0200	1.3224	-1.1024	0.2199	0.2146
	0.0100	0.0250	1.3224	-1.2099	0.1124	0.1091
	0.0150	0.0300	0.0000	0.0000	0.0000	0.0000
0.0200	0.0000	0.0200	1.4398	-1.0000	0.4398	0.4292
	0.0050	0.0250	1.4398	-1.1024	0.3373	0.3272
	0.0100	0.0300	1.4398	-1.2099	0.2299	0.2218
	0.0200	0.0400	0.0000	0.0000	0.0000	0.0000
0.0300	0.0000	0.0300	1.6897	-1.0000	0.6897	0.6655
	0.0100	0.0400	1.6896	-1.2099	0.4797	0.4579
	0.0200	0.0500	1.6896	-1.4398	0.2498	0.2358
	0.0300	0.0600	0.0000	0.0000	0.0000	0.0000
0.0400	0.0100	0.0500	1.9594	-1.2099	0.7494	0.7075
	0.0200	0.0600	1.9594	-1.4398	0.5195	0.4845
	0.0300	0.0700	1.9594	-1.6896	0.2697	0.2484
	0.0400	0.0800	0.0000	0.0000	0.0000	0.0000
0.0600	0.0300	0.0900	2.5587	-1.6897	0.8689	0.7829
	0.0400	0.1000	2.5588	-1.9596	0.5992	0.5341
	0.0500	0.1100	2.5589	-2.2494	0.3095	0.2731
	0.0600	0.1200	0.0000	0.0000	0.0000	0.0000
0.0800	0.0500	0.1300	3.2381	-2.2497	0.9883	0.8541
	0.0600	0.1400	3.2385	-2.5596	0.6788	0.5806
	0.0700	0.1500	3.2390	-2.8895	0.3494	0.2961
	0.0800	0.1600	0.0000	0.0000	0.0000	0.0000
0.1000	0.0800	0.1800	3.9991	-3.2405	0.7586	0.6226
	0.0900	0.1900	4.0001	-3.6107	0.3893	0.3161
	0.1000	0.2000	0.0000	0.0000	0.0000	0.0000
0.1100	0.0900	0.2000	4.4101	-3.6116	0.7985	0.6420
	0.1000	0.2100	4.4111	-4.0018	0.4092	0.3257
	0.1100	0.2200	0.0000	0.0000	0.0000	0.0000
0.1200	0.1000	0.2200	4.8413	-4.0028	0.8385	0.6611
	0.1100	0.2300	4.8428	-4.4135	0.4292	0.3352
	0.1200	0.2400	0.0000	0.0000	0.0000	0.0000

Table 11

Streamlines of the Supersonic Flow (53) in the Physical Plane

Note that x and y are given only up to a multiplicative constant and that the flow is symmetric with respect to the x-axis.

$\psi_* = 0.0$		$\psi_* = 0.1$		$\psi_* = 0.2$	
x	y	x	y	x	y
4.30	0.00	4.18	0.45	4.03	0.90
8.40	0.00	8.54	0.46	8.19	0.92
13.44	0.00	13.78	0.47	13.21	0.94
19.60	0.00	19.58	0.48	19.03	0.96
26.36	0.00	26.70	0.49	25.91	0.98
34.44	0.00	34.70	0.50	33.81	0.99

$\psi_* = 0.3$		$\psi_* = 0.4$	
x	y	x	y
4.11	1.37	4.00	1.82
8.39	1.39	8.12	1.86
13.39	1.42	13.12	1.90
19.29	1.46	18.74	1.94
26.09	1.49	25.68	1.98
33.79	1.53	33.18	2.03

$\psi_* = 0.5$		$\psi_* = 0.6$	
x	y	x	y
4.06	2.27	4.28	2.72
8.32	2.32	8.42	2.78
13.26	2.37	15.42	2.86
20.16	2.42	19.16	2.89
26.40	2.48	25.96	2.96
34.60	2.54	34.12	3.02

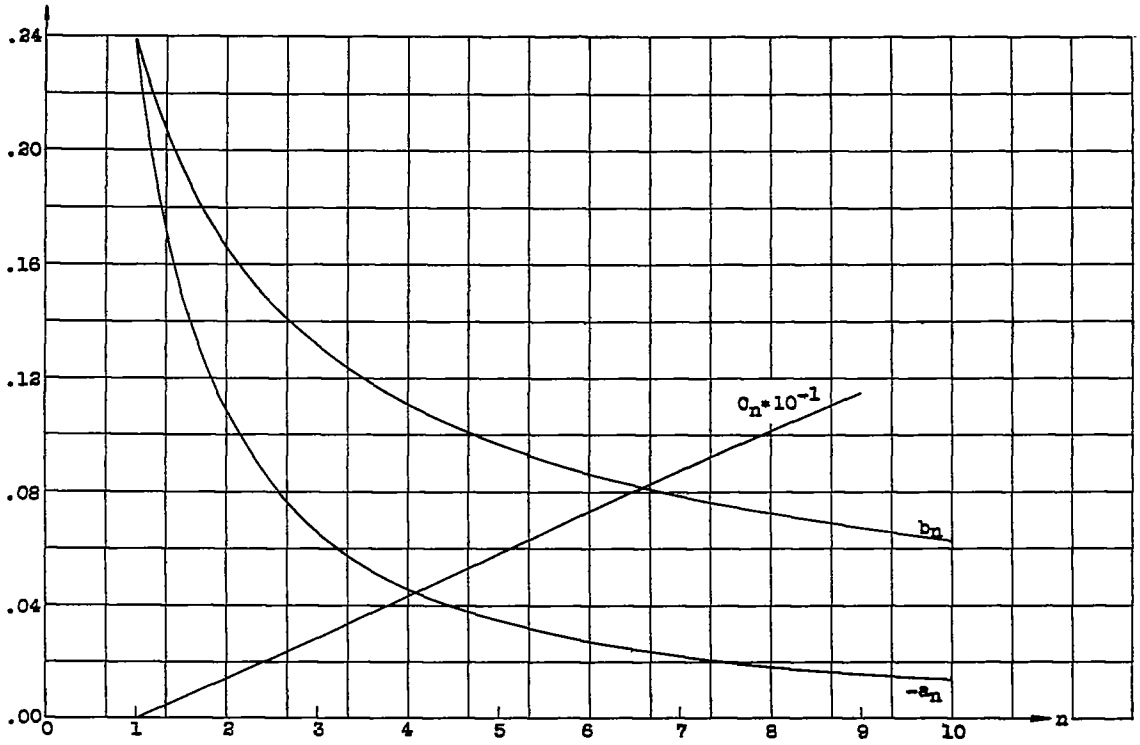

Diagram I.- $-a_n$, b_n, c_n as functions of n.

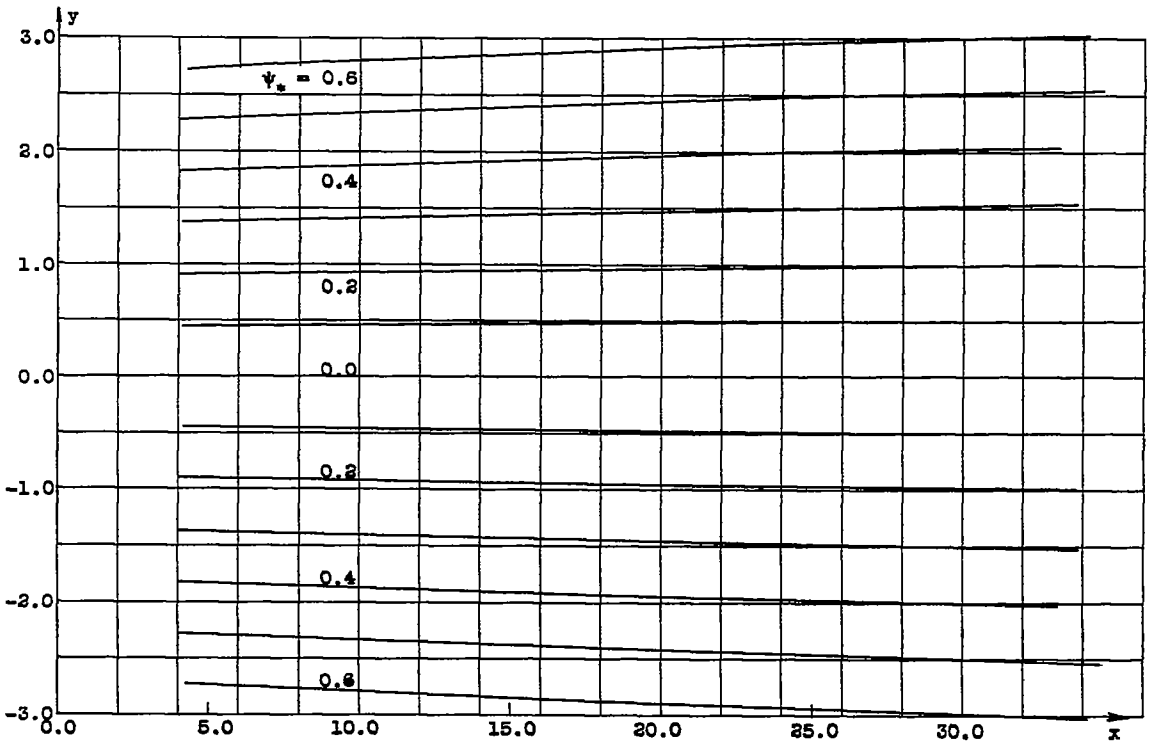

Diagram II.- Streamlines of the supersonic flow (53) in the physical plane.