REPORT No. 863

WING PLAN FORMS FOR HIGH-SPEED FLIGHT

By Robert T. Jones

SUMMARY

It is pointed out that, in the case of an airfoil of infinite aspect ratio moving at an angle of sideslip, the pressure distribution is determined solely by that component of the motion in a direction normal to the leading edge. It follows that the attachment of plane waves to the airfoil at near-sonic or supersonic speeds (Ackeret theory) may be avoided and the pressure drag may be reduced by the use of plan forms in which the angle of sweepback is greater than the Mach angle.

The analysis indicates that for aerodynamic efficiency, wings designed for flight at supersonic speeds should be swept back at an angle greater than the Mach angle and the angle of sweepback should be such that the component of velocity normal to the leading edge is less than the critical speed of the airfoil sections. This principle may also be applied to wings designed for subsonic speeds near the speed of sound, for which the induced velocities resulting from the thickness might otherwise be sufficiently great to cause shock waves.

INTRODUCTION

The theory of potential flows with small disturbances is particularly suited for application to aeronautical problems because the assumptions of small disturbances and isentropic flows on which this theory is based agree with the requirements for efficient flight. Theories of large disturbances, which deal with the formation of shock waves, are of lesser practical interest since such theories describe the losses of energy and the large drags associated with unsuitable forms.

At subsonic speeds the assumption of small disturbances leads to the well-known thin-airfoil theory and the Prandtl-Glauert rule (references 1 and 2); whereas at supersonic velocities this assumption leads to the Ackeret theory (reference 3), according to which the wing sections generate plane sound waves of small amplitude. The assumption of small disturbances, although mathematically valid in the limiting case, does not, of course, insure that such a condition will exist with an actual body of finite thickness. Fortunately, experiments have been made that show in a general way the limits of applicability of this assumption. Of particular interest are the experiments of Ferri (reference 4) and Stanton (reference 5).

At present both the experiments and the theory have been restricted primarily to the two-dimensional flow caused by motion of the wing at right angles to its long axis. For this case the theory shows a radical change in the properties of the wing on transition from subsonic to supersonic speeds. At subsonic speeds the air flows smoothly over the wing section and no pressure drag arises. At angles of attack a suction force is developed on the nose of the airfoil of sufficient magnitude to bring the resultant air force forward relative to the chord axis to a position nearly at right angles to the relative wind. As soon as the speed of sound is exceeded, however, the nature of the flow changes and these favorable characteristics disappear. Instead there arise a pressure drag proportional to the square of the thickness and an additional drag equal to the lift times the angle of attack. These adverse effects are associated with the formation of plane sound waves by the airfoil. Predictions of the theory are borne out by experiments in supersonic wind tunnels.

The purpose of the present report is to show how the adverse effects of high speed may be minimized by the use of a relatively large angle of sweepback, so that the type of flow described in the Ackeret theory no longer occurs. Certain effects of sweepback have, of course, been known for some time (references 6 to 9). Küssner (reference 8) mentions compressibility effects of sweepback at subsonic speeds. Busemann (reference 9) considers the effect of sweepback at supersonic speeds and points out that the drag associated with flows of the Ackeret type may be reduced by the use of sweepback. Busemann does not, however, consider angles of sweepback greater than the Mach angle, which result in a different type of flow.

SYMBOLS

α	angle of attack
β	angle of sideslip or sweepback
u, v, w	velocity components along x, y, z
x, y, z	coordinates
y'	transformed coordinate
b	wing span
c	wing chord; velocity of sound
t	thickness
V	velocity of flight
ϕ	disturbance-velocity potential
L	lift
D	drag
C_L	lift coefficient
C_D	drag coefficient
M	Mach number
Δp	local pressure difference
q	dynamic pressure
θ	spanwise-location parameter $\left(\cos^{-1}\frac{y}{b/2}\right)$

883026—50——6

THEORY OF WING AT AN ANGLE OF SIDESLIP

The primary effects of sweepback may be illustrated by considering the problem of a long and approximately cylindrical airfoil at an angle of sideslip. Two such airfoils may then be combined (with due allowance for their interference) to give a sweptback plan form.

First consider the airfoil with its long axis parallel to the x-axis and with the relative wind at an angle β to the coordinate system as in figure 1. By following equation (9a) of reference 2 the differential equation of the flow may be written

$$\left(1-\frac{u^2}{c^2}\right)\frac{\partial u}{\partial x}+\left(1-\frac{v^2}{c^2}\right)\frac{\partial v}{\partial y}+\left(1-\frac{w^2}{c^2}\right)\frac{\partial w}{\partial z}-2\frac{uv}{c^2}\frac{\partial v}{\partial x}$$
$$-2\frac{vw}{c^2}\frac{\partial v}{\partial z}-2\frac{uw}{c^2}\frac{\partial w}{\partial x}=0 \qquad (1)$$

The Prandtl-Glauert rule follows from the assumption that only the velocity component u is comparable to the velocity of sound. In the present example both u and v, since they contain components of the flight velocity, are of the order of magnitude of the sound velocity c. On the other hand, if the flow patterns in planes perpendicular to the long axis of the wing are similar (two-dimensional flow), the terms $\partial u/\partial x$ and $\partial v/\partial x$ vanish.

If small velocity disturbances are assumed, the term w/c may be neglected and the term $1-\frac{v^2}{c^2}$ may be replaced by

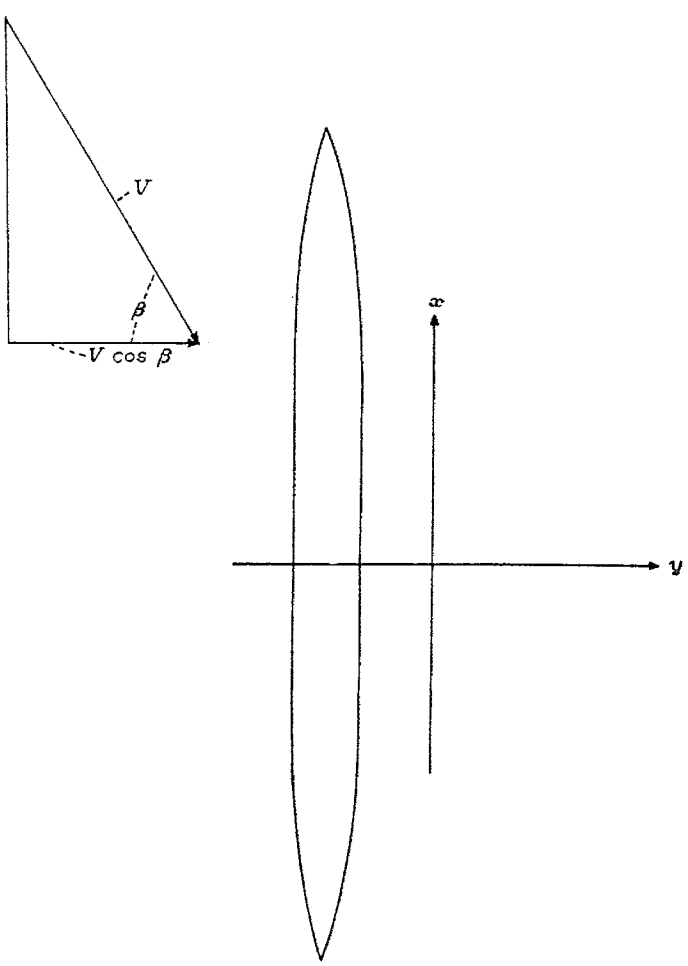

FIGURE 1.—Plan view of airfoil showing axes used in equation (1).

$1-\left(\frac{V\cos\beta}{c}\right)^2$ where $V\cos\beta$ is the component of the flight velocity in the direction normal to the long axis of the wing. By using this relation and introducing the disturbance potential ϕ, there is obtained

$$\left[1-\left(\frac{V\cos\beta}{c}\right)^2\right]\frac{\partial^2\phi}{\partial y^2}+\frac{\partial^2\phi}{\partial z^2}=0 \qquad (2)$$

It is important to note that the derivation of this equation involves no restriction on the flight velocity V, which may be subsonic or supersonic. The restriction is that the disturbance velocities $\partial\phi/\partial y$ and $\partial\phi/\partial z$ be small relative to c.

If $V\cos\beta$ is less than the sound velocity c, the substitution

$$y'=\frac{y}{\sqrt{1-\left(\frac{V\cos\beta}{c}\right)^2}} \qquad (3)$$

yields Laplace's equation

$$\frac{\partial^2\phi}{\partial y'^2}+\frac{\partial^2\phi}{\partial z^2}=0 \qquad (4)$$

and it follows that the flow patterns are similar to those occurring in an incompressible fluid except for an increase of the pressures in the ratio

$$\frac{1}{\sqrt{1-\left(\frac{V\cos\beta}{c}\right)^2}}$$

If $V\cos\beta$ is greater than c, the substitution

$$y'=\frac{y}{\sqrt{\left(\frac{V\cos\beta}{c}\right)^2-1}} \qquad (5)$$

results in the hyperbolic equation

$$\frac{\partial^2\phi}{\partial z^2}-\frac{\partial^2\phi}{\partial y'^2}=0 \qquad (6)$$

which is the basis of the Ackeret theory.

The derivation of equations (4) and (6) is actually a special case of a more general statement, namely, that the component of translation of a cylindrical body in the direction of its long axis has no effect on the motion of a frictionless fluid. In the case of a wing of constant section moving through still fluid, the flow is determined by the normal components of velocity of its solid boundaries and these components in turn are completely specified by the component of motion in planes perpendicular to the axis $V\cos\beta$. When the normal component of velocity $V\cos\beta$ is less than sonic, then the wing-section flows are determined by solutions of Laplace's equation. As is well known, these flows show no pressure drag due to thickness of the airfoil. On the other hand, if the normal component exceeds the velocity of sound, the flow patterns are of a different type and are characterized by plane sound waves. In this case a pressure drag arises and the suction force at the leading edge disappears (fig. 2 (a)).

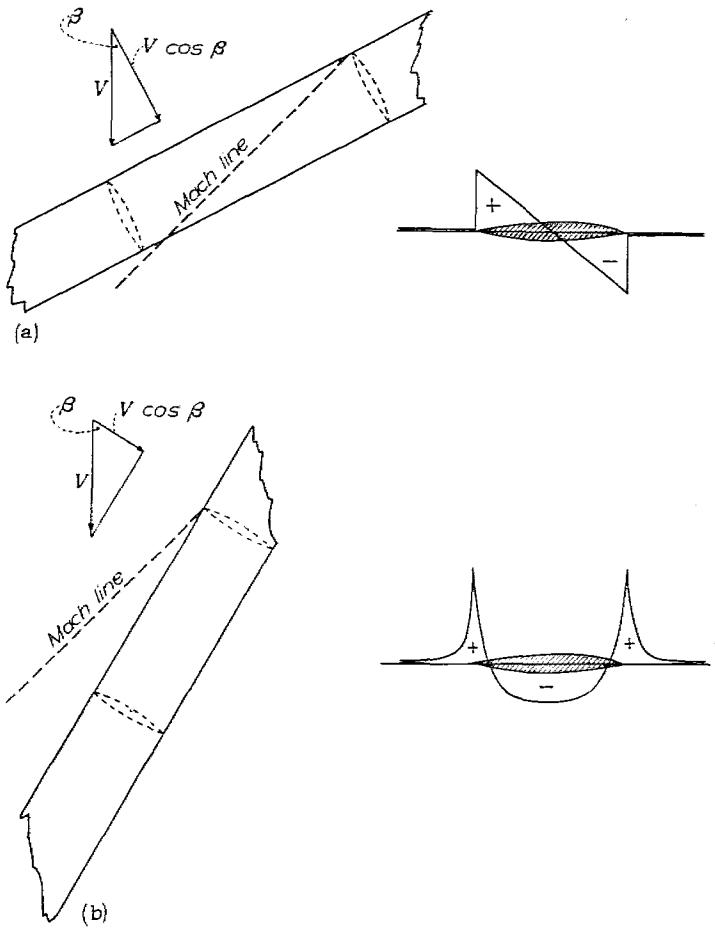

(a) $V \cos \beta > c$.
(b) $V \cos \beta < c$.

FIGURE 2.—Effect of leading-edge angle on pressure distribution.

A physical explanation of the occurrence of smooth flow patterns and pressure distributions at supersonic velocities is as follows: If V is greater than c but $V \cos \beta$ is less, then the angle of sideslip or sweepback is greater than the Mach angle (see fig. 2 (b)) and the airfoil will lie behind the characteristic lines along which pressure influences are transmitted (Mach lines). Thus, although the fluid directly upstream from a given section can receive no pressure signal from this section, the flow behaves as though it did receive such signals because of the successive influence of similar sections farther upstream along the airfoil. The streamlines will thus be caused to curve and follow paths appropriate to a subsonic flow, although the speed is everywhere supersonic.

Figure 3 illustrates the effect of sweepback on the change in cross section of a stream tube passing near the upper surface of a cambered airfoil. As is well known, the equations of fluid motion show a reduction in the area of a stream tube in the region of increased velocity above the airfoil when the velocity of flight is subsonic but show an increase in the cross section when the velocity of flight is supersonic. In figure 3 the component normal to the leading edge $V \cos \beta$ is subsonic; and hence in section view the streamlines, following the pattern for subsonic velocities, appear to contract as they flow over the upper surface. In plan view, however, the resolution of velocities shows that the flow lines bend as

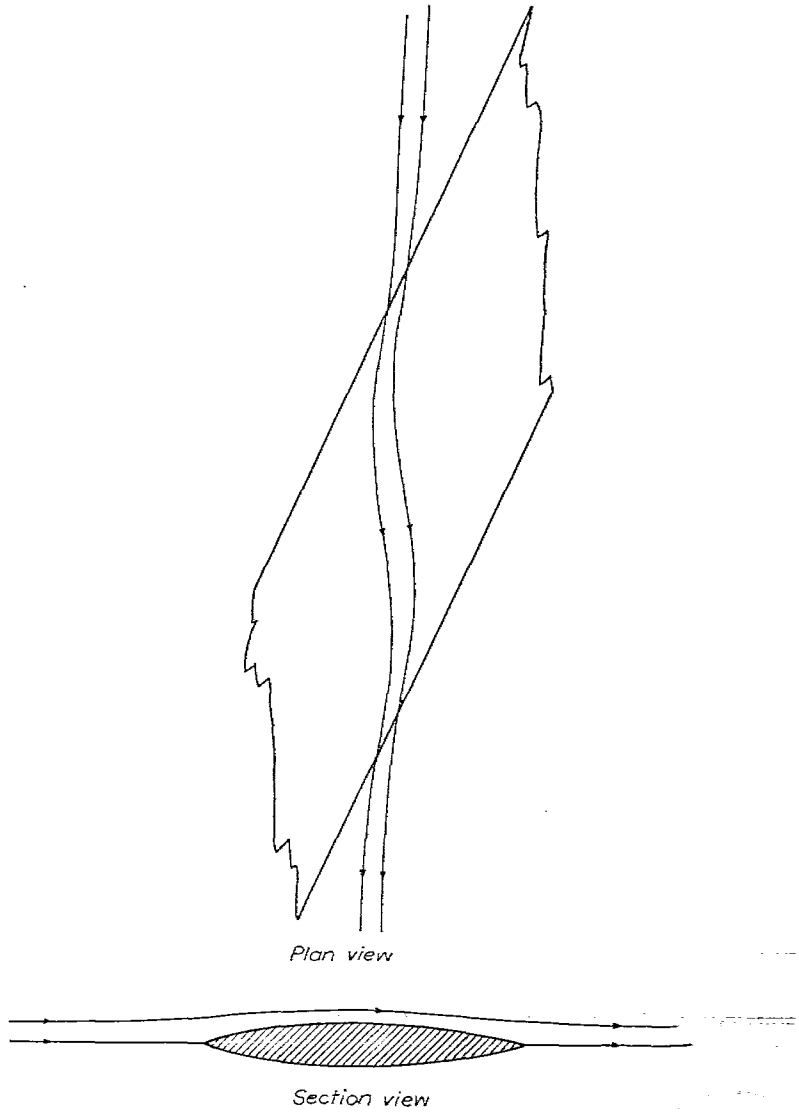

FIGURE 3.—Change in area of stream tube over upper surface of sweptback wing.

they pass over the wing in such a way as to increase the stream-tube area. In case the velocity of flight is supersonic, the latter effect must predominate, as is required by the equations of motion.

The order of magnitude of the pressure-drag coefficient and its variation with angle of sweepback are indicated by figure 4. The calculations were made by applying the Ackeret theory and formulas (4) and (5) to a wing of infinite aspect ratio. A simple biconvex wing section was assumed and the angle of attack was varied so as to maintain a constant lift coefficient of 0.5. The calculations were made for a Mach number of 1.4, with the result that at 45° the angle of sweepback becomes equal to the Mach angle and the factor

$$\frac{1}{\sqrt{\left(\frac{V \cos \beta}{c}\right)^2 - 1}}$$

becomes infinite. At this point the pressure drag due to thickness becomes infinite and the drag due to angle of attack (shown by the curve marked $\frac{t}{c}=0$) vanishes.

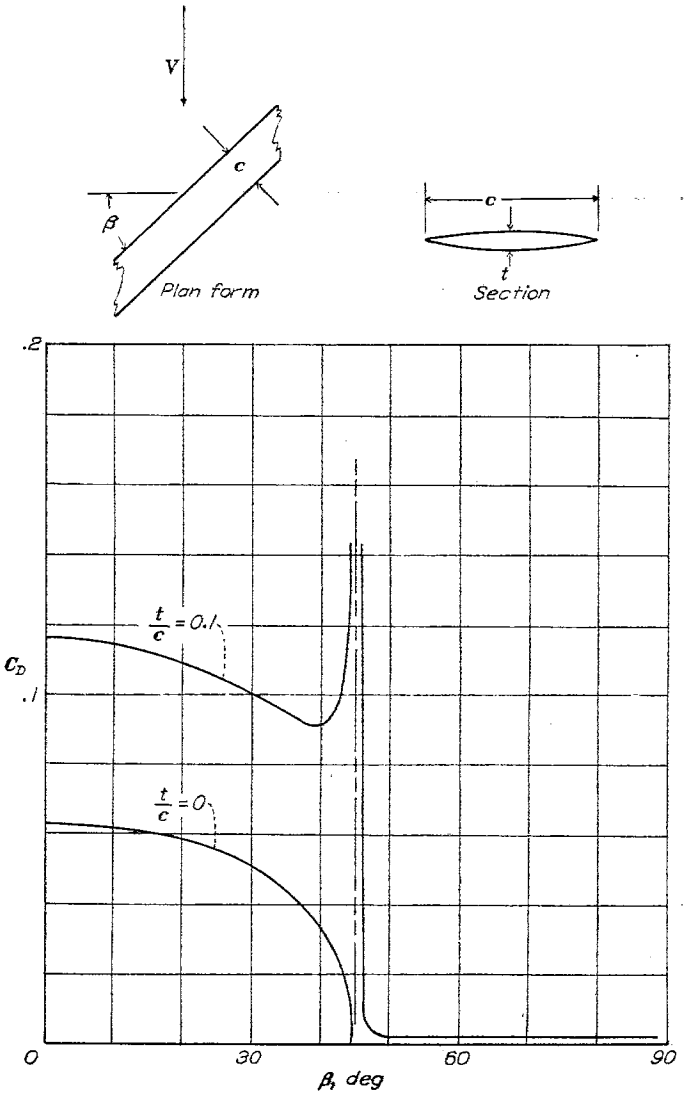

FIGURE 4.—Variation of pressure drag with angle of sweepback for infinite aspect ratio. $M=1.4$; $C_L=0.5$.

In the case of a wing of finite aspect ratio, it seems probable that in the regions of the center section and the tips pressure drags of the same order as those indicated for these sections by the Ackeret theory will appear. If the wing is of sufficiently high aspect ratio, however, the fraction of the wing area affected will be negligible and the pressure drag will be nearly that given in figure 4. The other drags involved are: (1) skin-friction drag, which may be of the order of 0.01, and (2) induced drag, which for an aspect ratio of 8 is also about 0.01.

WINGS OF FINITE SPAN AND THICKNESS

Schlichting (reference 10) proposes a trapezoidal plan form with tips cut away at the Mach angle as the ideal supersonic wing, since in this case the wake has no influence on the lifting surface and the drag is no greater than that of a wing of infinite span. In the plan forms proposed by Schlichting, however, the resultant force remains at right angles to the chord; hence the pressure drag is equal to the lift times the angle of attack. With this type of flow there is no favorable effect of aspect ratio.

It is interesting to note that a favorable interference may be obtained by separating the wing into lifting elements and staggering the elements in a rearward direction behind the Mach lines as in figure 5. In the staggered arrangement the upflow outside the vortices trailing from element A will be effective at the position of B and, although the lift of each element is at right angles to its chord, the upflow permits the angle of attack of element B to be reduced for the same lift and hence the lift-drag ratio will be improved.

According to Munk's stagger theorem (reference 11) the over-all drag of a lifting system in an incompressible flow would not be altered by changing the relative positions of the lifting elements along the direction of flight. In the type of flow considered by Munk, therefore, a reduction in the drag

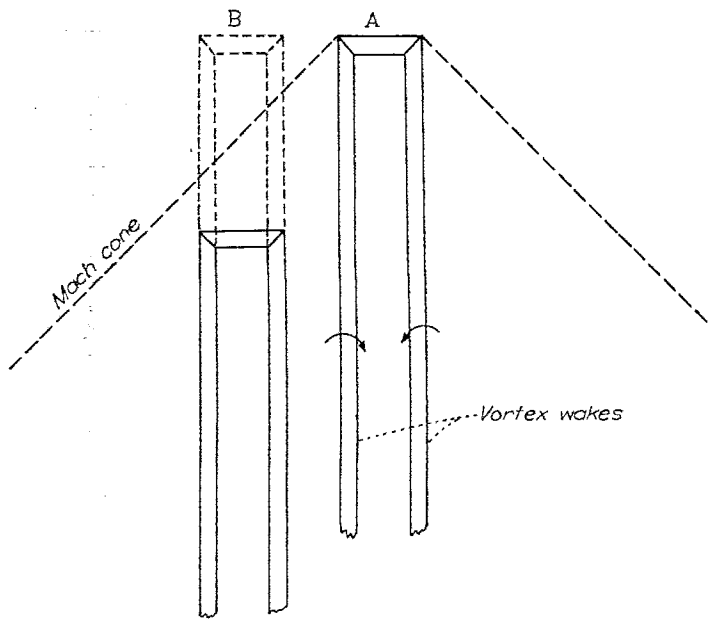

FIGURE 5.—Staggered lifting elements in supersonic flow.

of element B, caused by moving it into a position of greater upwash (that is, moving it backward relative to A), would be compensated by an equal increase in the drag of element A, resulting from the loss of upwash at A. (See fig. 5.) In supersonic flow, however, this reciprocal relation does not exist since a lifting element can produce no upwash ahead of its Mach cone. Lifting elements spaced at right angles to the direction of flight therefore have no favorable interference, and it is evident that the lift-drag ratio cannot be improved merely by increasing the aspect ratio of the lifting system. Favorable interference can be obtained only by arranging the lifting elements behind the Mach lines, as shown in figure 5.

Further analysis is needed to determine the flow near the center section of the sweptback wing because in this region the flow will not remain two-dimensional, as has been assumed. Departures from cylindrical flow caused by the tips will be small since their influence cannot extend forward of the Mach lines drawn from the points at which these departures originate in the plan form. As pointed out by Busemann and Schlichting (references 9 and 10), cylindrical flow may be preserved right up to the tips by cutting them off along the Mach lines. (See fig. 6.)

At large angles of sweepback the flow near the vertex is expected to be similar to that over the low-aspect-ratio triangular airfoil discussed in reference 12. Figure 7 shows the lift distribution obtained in reference 12 and shows qualitatively the type of approximation involved.

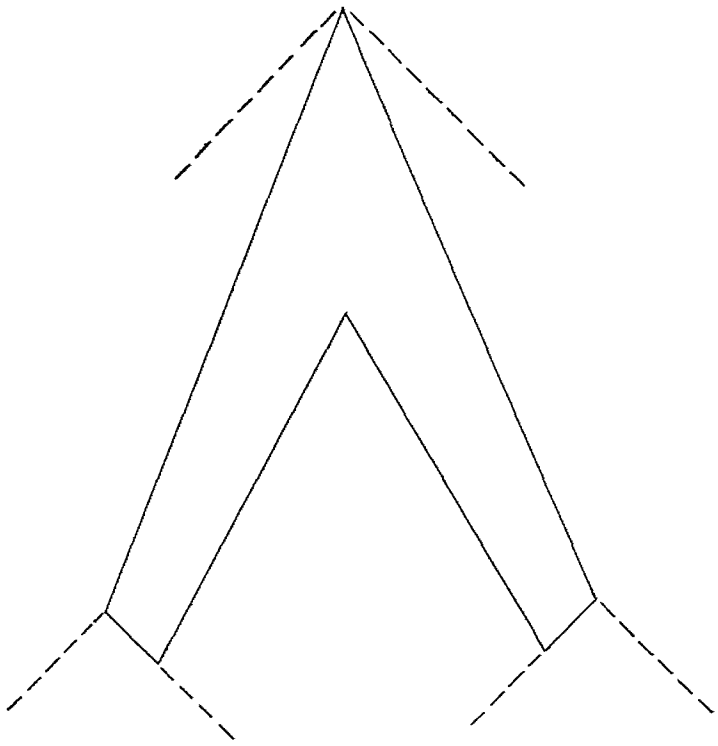

FIGURE 6.—Wing with tips cut away along the Mach lines.

Finite thickness is expected to result in a pressure drag on those sections near the center of the wing and further study is also required to establish the flow due to thickness in this region. Some insight into the problem of flow near the center section may be furnished by the known solutions for supersonic flow in three dimensions (reference 13). Finite thickness may also cause pressure drag in regions where the flow is two-dimensional if the induced velocities are great enough to cause shock waves. This effect may be avoided by increasing the angle of sweepback so that the normal component of velocity not only is subsonic but is less than the critical speed of the airfoil sections. This principle may also be applied to wings designed for subsonic speeds near the speed of sound.

LANGLEY MEMORIAL AERONAUTICAL LABORATORY,
NATIONAL ADVISORY COMMITTEE FOR AERONAUTICS,
LANGLEY FIELD, VA., *June 23, 1945.*

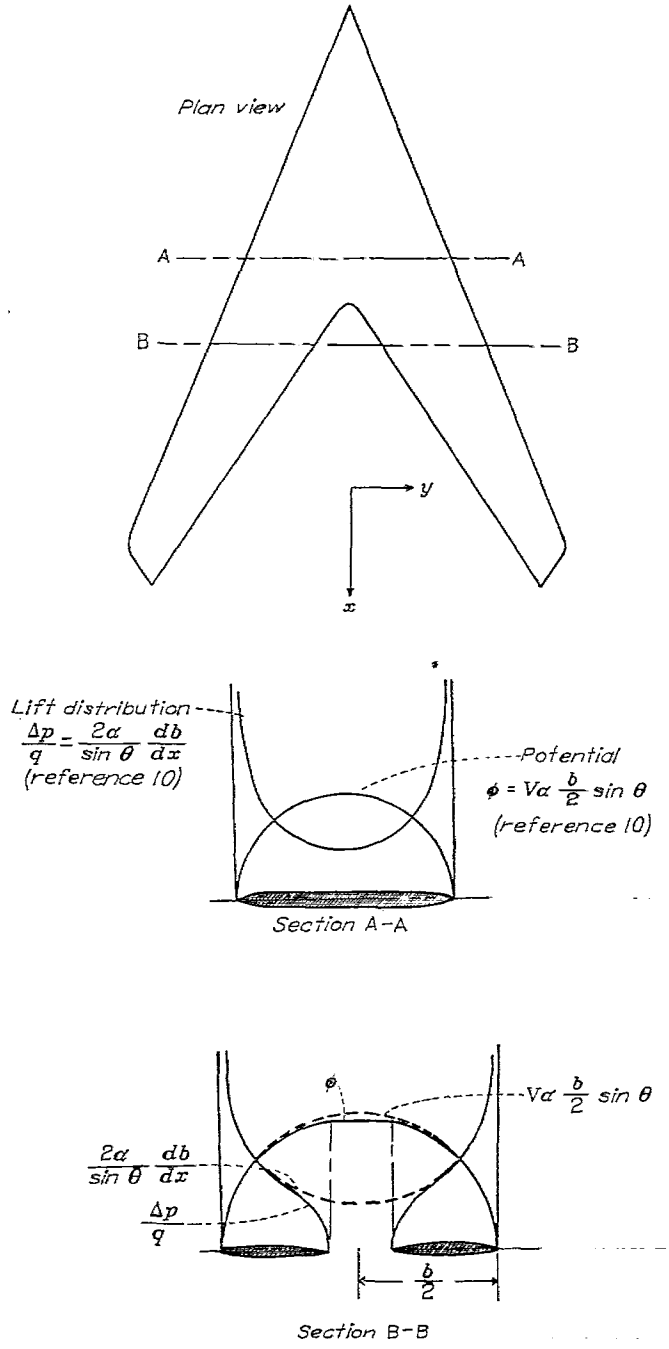

FIGURE 7.—Approximate distribution of lift near vertex of wing with large angle of sweepback.

REFERENCES

1. Glauert, H.: The Effect of Compressibility on the Lift of an Aerofoil. R. & M. No. 1135, British A. R. C., 1927.
2. Prandtl, L.: General Considerations on the Flow of Compressible Fluids. NACA TM No. 805, 1936.
3. Ackeret, J.: Air Forces on Airfoils Moving Faster Than Sound. NACA TM No. 317, 1925.
4. Ferri, Antonio: Experimental Results with Airfoils Tested in the High-Speed Tunnel at Guidonia. NACA TM No. 946, 1940.
5. Taylor, G. I.: Applications to Aeronautics of Ackeret's Theory of Aerofoils Moving at Speeds Greater Than That of Sound. R. & M. No. 1467, British A. R. C., 1932.
6. Munk, Max M.: Note on the Relative Effect of the Dihedral and the Sweep Back of Airplane Wings. NACA TN No. 177, 1924.
7. Betz, A.: Applied Airfoil Theory. Unsymmetrical and Non-Steady Types of Motion. Vol. IV of Aerodynamic Theory, div. J, ch. IV, sec. 2, W. F. Durand, ed., Julius Springer (Berlin), 1935, pp. 97–99.
8. Küssner, H. G.: General Airfoil Theory. NACA TM No. 979, 1941.
9. Busemann, A.: Aerodynamischer Auftrieb bei Überschallgeschwindigkeit. Luftfahrtforschung, Bd. 12, Nr. 6, Oct. 3, 1935, pp. 210–220.
10. Schlichting, H.: Airfoil Theory at Supersonic Speed. NACA TM No. 897, 1939.
11. Munk, Max M.: The Minimum Induced Drag of Aerofoils. NACA Rep. No. 121, 1921.
12. Jones, Robert T.: Properties of Low-Aspect-Ratio Pointed Wings at Speeds below and above the Speed of Sound. NACA Rep. No. 835, 1946.
13. Von Kármán, Th.: The Problem of Resistance in Compressible Fluids. GALCIT Pub. No. 75, 1936. (From R. Accad. d'Italia, cl. sci. fis., mat. e nat., vol. XIV, 1936.)