REPORT No. 872

THEORETICAL STUDY OF AIR FORCES ON AN OSCILLATING OR STEADY THIN WING IN A SUPERSONIC MAIN STREAM

By I. E. Garrick and S. I. Rubinow

SUMMARY

A theoretical study, based on the linearized equations of motion for small disturbances, is made of the air forces on wings of general plan forms moving forward at a constant supersonic speed. The boundary problem is set up for both the harmonically oscillating and the steady conditions. Two types of boundary conditions are distinguished, which are designated "purely supersonic" and "mixed supersonic." The purely supersonic case involves independence of action of the upper and lower surfaces of the airfoil and the present analysis is mainly concerned with this case. A discussion is first given of the fundamental or elementary solution corresponding to a moving source. The solutions for the velocity potential are then synthesized by means of integration of the fundamental solution for the moving source. The method is illustrated by applications to a number of examples for both the steady and the oscillating cases and for various plan forms, including swept wings and rectangular and triangular plan forms. The special results of a number of authors are shown to be included in the analysis.

INTRODUCTION

This paper constitutes a theoretical study of the aerodynamic forces on an oscillating or steady wing of finite span moving forward at a uniform supersonic speed. The treatment is based on the linearized theory obtained by considering only small disturbances in an ideal fluid. The wing is therefore considered to be a nearly flat thin surface at a small angle of attack and the flow is considered nonviscous and free of strong shocks. The theory in this case is equivalent to finding certain solutions of the wave equation in three dimensions with respect to a moving coordinate system.

For the case of steady motion there exist a number of interesting solutions and methods. Among these may be mentioned the Von Kármán and Moore linearized treatment of slender bodies of revolution (reference 1), the Prandtl acceleration-potential method employed by Schlichting (references 2 and 3), the Busemann method of "linearized conical flows" (reference 4), studies of Jones, Puckett, Stewart, Brown, and Gurevich (references 5 to 9); and a method of Von Kármán employing Fourier integral solutions of the two-dimensional wave equation and described by him as "acoustic oscillator method" (Wright Brothers Memorial lecture, Dec. 17, 1946).

The corresponding unsteady or nonstationary problem for two-dimensional flow (infinite aspect ratio) may be considered to be solved. In this connection there may be mentioned the work of Possio, Von Borbely, Temple and Jahn, and the present authors (references 10 to 13). Of interest also are two wartime German papers by Schwarz and Hönl (references 14 and 15). The corresponding steady plane case to which the nonstationary problem may be reduced is that treated by Ackeret.

Results for the nonstationary or oscillating case are of great interest in the investigation of aircraft instability. The two-dimensional results have been applied to a study of flutter at supersonic speeds in references 12 and 13. Of more direct interest for this application are the three-dimensional results, especially for wings of swept plan form.

The method used in the present study is to build up solutions of the equation satisfied by the velocity potential by superposition of the fundamental wave-potential solution for a spherical source. These solutions are also made to satisfy certain required boundary conditions on the airfoil surface. In the two-dimensional supersonic nonstationary case, which appears herein as a special limiting case, it can be proved that the procedure leads to a solution that is the unique solution of the given boundary problem. (For the problem of subsonic flow past a thin wing, reference may be made to the general treatment and method of Küssner (reference 16) which also involves solutions of the wave equation.)

Some qualitative features of the nature of the boundary problem may be mentioned here. Further remarks may be found in reference 17 and in Von Kármán's Wright Brothers Memorial lecture. In the case of subsonic flow past an airfoil the whole field is influenced by the body. The concept of circulation has proved to be very useful and the Kutta condition has been used to specify the circulation by requiring smooth flow leaving the trailing edge. Thus, a deflected aileron in subsonic flow influences the flow pattern over the whole wing even more importantly than over the aileron itself

883026—50——18

In the case of supersonic flow the influence of the body is limited to only certain parts of the field of flow and generally the wake does not influence the upstream flow. The boundary problem for a three-dimensional surface moving at a supersonic speed can be classified into two types referred to herein as "purely supersonic" and "mixed supersonic." The definition of these terms is given in the analysis according to the parts of the field influenced by the airfoil, the purely supersonic case involving independence of action of the top and bottom surfaces and no reflecting surfaces in the field. Thus, in the purely supersonic case, a deflection of the aileron would produce only a local effect near the aileron; in the mixed supersonic case, it may have a decided influence on the part of the wing adjacent to the aileron or on other parts of the wing. For a given wing both types of problems may be involved.

The treatment used for the purely supersonic cases, involving source and sink distributions to account for the action of the body, is believed to be exact within the framework of the linearized theory. The upper and lower surfaces of the airfoil are regarded as acting independently, each surface being "unaware" of the presence of the other. The treatment is thus analogous to that of sound in a moving medium generated by the motion of pistons imbedded in an infinite plane. This flow picture is obviously incomplete in the mixed case and more complicated distributions (doublets) are also required. For some purposes, however, the simpler treatment may still be used in conjunction with appropriate correction factors. Also, for steady flow past a symmetrical airfoil at zero lift, the simpler treatment can be employed for study of the wave drag.

The object of the present paper is to develop the expression for the velocity potential in the purely supersonic case, based on the elementary solution for the sound source moving uniformly at a supersonic speed, and to indicate its application by a number of special examples.

SYMBOLS

ϕ	disturbance-velocity potential
x', y', z'	rectangular coordinates for fixed system
x, y, z	rectangular coordinates attached to source moving in negative x-direction; also represents field point being influenced
ξ', η', ζ'	rectangular coordinates used to represent space coordinates in fixed system
ξ, η, ζ	rectangular coordinates used to represent space location at source distribution $A(\xi, \eta, \zeta)$
t, T, t'	time
v	velocity of main stream
c	velocity of sound
M	Mach number (v/c)
r	distance defined by equation (8)
τ_1, τ_2	time function defined in equation (7a)
$\beta=\sqrt{M^2-1}$	
g	function defining airfoil surface $(y=g(x, z, t))$
$\zeta_0, \zeta_1, \zeta_2, \xi_1$	limits defined in equation (10)
θ	variable used instead of ζ defined by relation preceding equation (15a)
p	pressure
p_0	reference pressure
ρ	density
α	angle of attack
$\dot{\alpha}$	time derivative of α
ω	angular frequency
$w(x, z, t)$	vertical velocity factored in equation (14) as a space function $W(x,z)$ and time function $w(t)$
Λ	angle of sweep
h	vertical displacement
$\dot{h}$	time derivative of h

ANALYSIS

WAVE EQUATION AND SOURCE SOLUTIONS

In the linearized theory based on small disturbances the equation satisfied by the velocity potential for the propagation of sound waves of small amplitude is the wave equation

$$\frac{1}{c^2}\frac{\partial^2\phi}{\partial t'^2}=\frac{\partial^2\phi}{\partial x'^2}+\frac{\partial^2\phi}{\partial y'^2}+\frac{\partial^2\phi}{\partial z'^2} \tag{1}$$

The fluid medium is considered at rest at infinity.

In the treatment of linear partial differential equations the so-called elementary or fundamental solution is of great importance since general solutions can be built up by distributions of elementary solutions. From a physical point of view the elementary solution may correspond to a source. A discussion of the nature of elementary solutions for hyperbolic differential equations of a general type has been given by Hadamard (reference 18), who makes the cardinal statement that "every result of the theory can be and has to be deduced from the consideration of the elementary solution only."

A fundamental solution of equation (1) from which general solutions may be formed is that of a source of sound fixed in the medium

$$\phi_0=\frac{A}{r'}f\left(t'-\frac{r'}{c}\right) \tag{2}$$

where

$$r'=\sqrt{(x'-\xi')^2+(y'-\eta')^2+(z'-\zeta')^2}$$

In equation (2) the fixed source is located at the point (ξ', η', ζ'), the strength of the source is $A(\xi', \eta', \zeta')f(t')$, and the minus sign indicates that the spherical waves are diverging from the center of the disturbance.

Another closely related solution of equation (1) is that of a fixed point source for which the spherical waves are converging onto the source

$$\phi_0=\frac{A}{r'}f\left(t'+\frac{r'}{c}\right) \tag{3}$$

The wave potential in equation (2) is often designated "retarded" and that in equation (3), "advanced."

It is intended to consider thin lifting surfaces of small curvature which are moving forward at a constant supersonic velocity v and which may be performing small oscillations normal to the direction of v. The direction of v will be that of the negative x-axis and the surface will be replaced by a distribution of moving sources in the xz-plane (fig. 1).

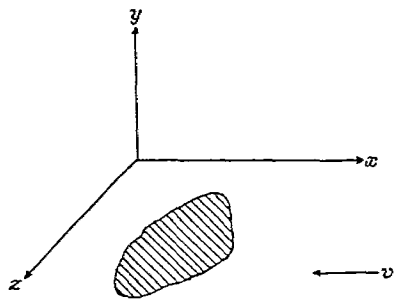

FIGURE 1.—The coordinate system used. Thin lifting surface in xz-plane moving at a constant supersonic velocity v in the negative x-direction.

Consider a source moving in the negative x-direction with uniform velocity v and a rectangular coordinate system attached to the moving source. If the new coordinates are designated by x, y, z, t, where $x=x'+vt'$, $y=y'$, $z=z'$, $t=t'$, the equation satisfied by the potential is

$$\frac{1}{c^2}\left(\frac{\partial}{\partial t}+v\frac{\partial}{\partial x}\right)^2\phi=\frac{\partial^2\phi}{\partial x^2}+\frac{\partial^2\phi}{\partial y^2}+\frac{\partial^2\phi}{\partial z^2} \tag{4}$$

or

$$\frac{1}{c^2}\frac{\partial^2\phi}{\partial t^2}+\frac{2v}{c^2}\frac{\partial^2\phi}{\partial x\partial t}+\left(\frac{v^2}{c^2}-1\right)\frac{\partial^2\phi}{\partial x^2}-\frac{\partial^2\phi}{\partial y^2}-\frac{\partial^2\phi}{\partial z^2}=0$$

This equation is satisfied by the potential of sources of sound in motion through the medium with uniform velocity v in the negative x-direction. It is also the equation satisfied by the disturbance velocity potential for a fixed body creating small perturbations from an oncoming main stream of velocity v in the x-direction. A brief derivation from hydrodynamical principles is given in appendix A.

It is known from the classical study of the wave equation (reference 16) and can be verified by direct substitution that a solution of equation (1) is transformed to a solution of equation (4) by means of the following substitutions, corresponding to a combination of the Lorentz transformation and a Galilean transformation:

$$\left.\begin{aligned} x'&=\frac{x}{\sqrt{1-M^2}}\\ y'&=y\\ z'&=z\\ t'&=t\sqrt{1-M^2}+\frac{xM}{c\sqrt{1-M^2}}\end{aligned}\right\} \tag{5}$$

where M, the Mach number of the main flow, is v/c.

For the purpose of studying the supersonic case ($M>1$), it is more convenient to employ modifications of transformation (5) obtained by multiplying the right-hand side by the constant $1/\sqrt{1-M^2}$, or

$$\left.\begin{aligned} x'&=\frac{x}{1-M^2}\\ y'&=\frac{y}{\sqrt{1-M^2}}\\ z'&=\frac{z}{\sqrt{1-M^2}}\\ t'&=t+\frac{xM}{c(1-M^2)}\end{aligned}\right\} \tag{5a}$$

The particular solution of equation (4) that corresponds to a moving source will be seen in the following discussion to be analogous to a solution of equation (1) given by the sum of potentials in equations (2) and (3), namely, to

$$\phi_0=\frac{A}{r'}\left[f\left(t'-\frac{r'}{c}\right)+f\left(t'+\frac{r'}{c}\right)\right] \tag{6}$$

The desired solution of equation (4) corresponding to equation (6) is obtained with the aid of the substitutions (5a) as

$$\phi_0=\frac{A}{r}\left[f\left(t-\frac{M}{c}\frac{x-\xi}{M^2-1}-\frac{r}{c}\right)+f\left(t-\frac{M}{c}\frac{x-\xi}{M^2-1}+\frac{r}{c}\right)\right] \tag{7}$$

where

$$r=\frac{1}{M^2-1}\sqrt{(x-\xi)^2-(M^2-1)[(y-\eta)^2+(z-\zeta)^2]} \tag{8}$$

(The term $\sqrt{1-M^2}$ in equations (5a) causes no difficulty since only the squares of the space coordinates are needed.)

This solution for ϕ_0 may be expressed in the form

$$\phi_0=\frac{A}{r}\left[f(t-\tau_2)+f(t-\tau_1)\right] \tag{7a}$$

where

$$\tau_2=\frac{M}{c}\frac{x-\xi}{M^2-1}+\frac{r}{c}$$

$$\tau_1=\frac{M}{c}\frac{x-\xi}{M^2-1}-\frac{r}{c}$$

and where r is defined as in equation (8). The constant $A(\xi,\eta,\zeta)$ could of course have been included in the functional symbol f but has been separated for convenience. It may be considered to represent the space variation of the source strength as distinguished from the time variation of strength. For a moving source of constant strength the time function may be considered equal to unity and the potential expressed as (reference 2):

$$\phi=\frac{2A}{r}$$

It will be recognized that the solution, equation (7a), is valid in a conical region, the so-called "Mach cone," opening aft of the moving source. Outside of this conical region, defined by the equation $r=0$, the flow is undisturbed.

The result expressed by equation (7) may be considered physically from two points of view. In one, as considered by Prandtl (reference 2), a source of variable strength moving along a certain path is replaced by a continuous succession of fixed source pulses distributed along its path acting consecutively one after the other. Each pulse, considered fixed in an absolute coordinate system, emits a spherical wave traveling at sound speed and the coordinates of the center of the spherical surface are $\xi+vt$, η, ζ. The radius vector R of a point (x, y, z) with respect to this center is

$$R=\sqrt{[x-(\xi+vt)]^2+(y-\eta)^2+(z-\zeta)^2}$$

The time at which the spherical wave passes the point (x, y, z) is

$$t=\frac{R}{c}$$

Eliminating R between the preceding two relations results in

$$c^2t^2-(x-\xi-vt)^2-(y-\eta)^2-(z-\zeta)^2=0$$

The roots of this quadratic equation in t are precisely the quantities τ_1 and τ_2 defined in equation (7a); that is, the field point (x, y, z) is influenced at time t by two waves which originated at times τ_2 and τ_1 earlier. It is of interest to observe that, in the supersonic flow, both roots are real and positive and have physical significance; whereas, in the subsonic flow, only one root is positive and of physical significance. In the supersonic case the field of influence of a source is the particular Mach cone with vertex at the source, and through each point in this region at instant t, there pass two spherical surfaces representing the waves originating at times τ_1 and τ_2 earlier (fig. 2).

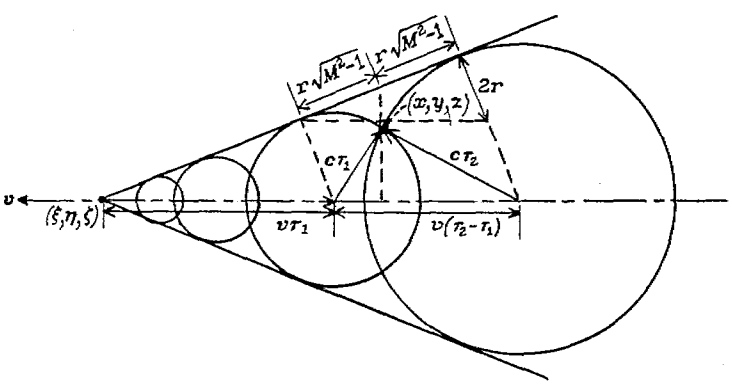

FIGURE 2.—Field of influence of spherical source moving at a constant supersonic velocity. Point (x, y, z) is affected at time t by two pulses originating at times τ_1 and τ_2 earlier.

From the other point of view of the result (equation (7)), a single diverging spherical wave-pulse is considered. Let this wave originate at the point (ξ, η, ζ) at a time T (fig. 3) and consider its effect at a point (x, y, z) (within the Mach cone whose vertex is at point (ξ, η, ζ)) moving with a velocity greater than that of sound. Clearly at a later time $T+\tau_1$ the moving point penetrates the wave front and at a still later time $T+\tau_2$ it emerges from the wave front. The potential at point (x, y, z) changes only on entering and on leaving the wave front and the two terms in equation (7)

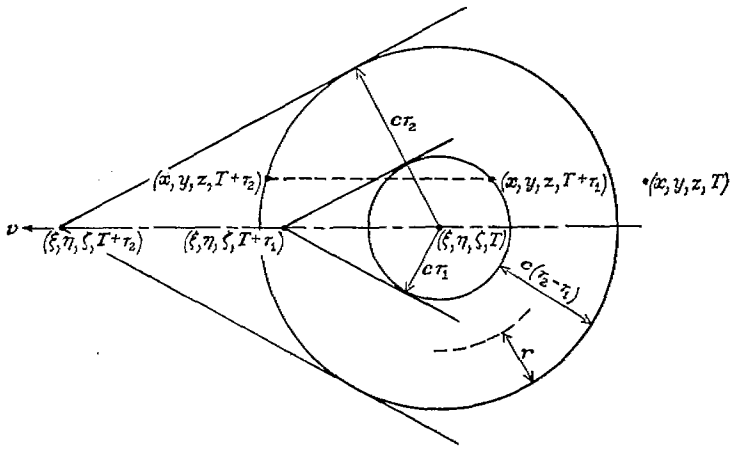

FIGURE 3.—Influence of single spherical wave pulse. Spherical wave originating at points (ξ, η, ζ) at time T influences point (x, y, z) fixed relative to (ξ, η, ζ) and moving at a constant supersonic speed, at times τ_1 and τ_2 later.

correspond to these two effects. The factor 2 appearing in the potential for a constant source moving at a supersonic speed also has its origin in this physical fact, in contrast to that for a source moving at a subsonic speed, where the field point penetrates the wave front but never emerges and where the corresponding factor is unity. The two-dimensional supersonic case involves cylindrical waves and the potential of the point (x, y) is continuously changing from the time the point enters to the time it emerges from the wave (reference 13). Observe the interesting geometrical property of r (equation (8)); namely $2r$ is the difference of the radii of the spherical wave at time τ_2 and at time τ_1, that is, $r=\frac{c}{2}(\tau_2-\tau_1)$. (Observe also that the potential which formally appears in equation (6) as the sum of potentials, half-advanced and half-retarded, transforms in the moving coordinates to a sum of retarded potentials in which the original retarded part is associated with the diverging spherical concave wave from which the point is emerging and the original advanced part is associated with a diverging convex wave into which the point is penetrating.) Recent papers of interest in connection with moving acoustical sources are references 19 and 20.

SURFACE DISTRIBUTION OF SOURCES

Sources and sinks of the type ϕ_0 will now be distributed to represent the upper and lower surfaces of a thin airfoil. The procedure to be followed is that used in the two-dimensional case (references 10 to 13) where the upper and lower surfaces are considered separately. Also the total effect may be separated into an effect of the mean-camber surface and an additive effect due to thickness alone. In most of the applications, unless stated to the contrary, the mean-camber surface is considered.

Let a continuous distribution of sources be given over the mean-camber surface. The airfoil is considered so thin and flat that the source distribution may be treated in the xz-plane (fig. 1). The airfoil surface may be considered moving at a constant speed v in the negative x-direction (or fixed in a stream moving in the x-direction). The effect at a point (x, y, z) at time t of a distribution of sources of position magnitude $A(\xi, 0, \zeta)$ is given by an appropriate

integration over a region of the $\xi\zeta$-plane of the form

$$\phi(x, y, z, t) = \int\int \phi_0 \, d\zeta \, d\xi \tag{9}$$

where ϕ_0 represents the function given in equation (7) with $\eta=0$.

The total effect at the point (x, y, z) is the sum of the effects of all disturbances having their origin within the Mach cone with vertex at point (x, y, z) and opening in the upstream direction. This conical region need not extend into the undisturbed part of the flow; that is, it need not extend beyond the most forward surface envelope of the Mach cones of influence of the body. There are essentially two types of boundary conditions that need to be distinguished, designated by the terms "purely supersonic" and "mixed supersonic." A point of the boundary belongs to a purely supersonic case if the upstream facing Mach cone contains, in the part of the xz-plane not considered occupied by the body, no disturbed fluid having a component normal to this surface. Otherwise, the point belongs to the mixed supersonic case. A sufficient (but not necessary) criterion for the purely supersonic case is that the component of the main stream normal to any edge or contour of the plan form in the xz-plane (contained within the upstream facing Mach cone of the given point) shall be supersonic. There is no downwash ahead of the body, no holes are in the body, no spilling of fluid occurs around edges, and no reflecting surfaces are in the flow field. In this case the upper and lower surfaces of the airfoil are considered to act independently of each other; a disturbance created on one side does not affect the opposite side. The flow can be considered to arise from the appropriate movement of small pistons acting at the regulating or generating surface. This condition is in contrast to that of the mixed supersonic case, for which the effect of the disturbance spills over the edges or sides, and a disturbed fluid region (downwash) may exist ahead of the body. Thus, points of a triangular surface, moving vertex foremost and completely outside of the Mach cone associated with the vertex, belong to the purely supersonic case. If the triangular surface is inside the Mach cone associated with the vertex, the points belong to the mixed supersonic case. Of course, for a given surface, both cases may be involved. A few examples are shown in figure 4.

In the purely supersonic case the circulation concept plays no particular role and the drag associated with lift or thickness may properly be denoted as wave drag. In the mixed case the flow retains subsonic features and the drag associated with the lift is sometimes denoted as induced drag.

Although the treatment given for the purely supersonic case is believed exact within the limitations of the linearized theory, an exact treatment of the mixed supersonic case is not available. These problems involve greater difficulties in the boundary conditions, for the flow to a certain extent acquires features of a subsonic flow in that the fluid field "senses" the approach of the body. Thus, in certain cases, conditions at the leading edge, at the trailing edge, and in the wake must be specially taken into account. For some purposes and in certain problems, however, it may be useful to treat the mixed supersonic case in the same manner as the

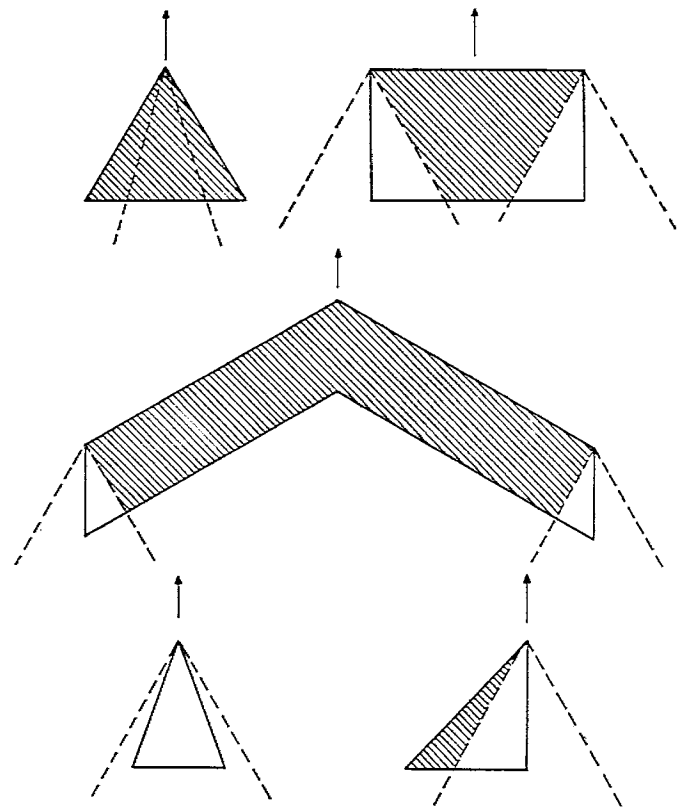

FIGURE 4.—Illustrations of plan forms with "mixed supersonic" regions (unshaded) and "purely supersonic" regions (shaded). Mach lines are shown dashed.

purely supersonic case and to introduce appropriate correction factors.

The region of integration in equation (9) is the part of the body (in the $\xi\zeta$-plane) cut out by the upstream opening Mach cone with vertex at point (x, y, z). This region in general depends on the plan form of the body as well as on the point (x, y, z). With the understanding that the leading point of the body is at $\xi=0$, the integration may be written

$$\phi(x, y, z, t) = \int_0^{\xi_1} \int_{\zeta_1}^{\zeta_2} \phi_0 \, d\zeta \, d\xi \tag{10}$$

where

$$\zeta_1 = z - \zeta_0$$

$$\zeta_2 = z + \zeta_0$$

$$\zeta_0 = \sqrt{\frac{(x-\xi)^2}{M^2-1} - y^2}$$

$$\xi_1 = x - y\sqrt{M^2-1}$$

The limits of integration ζ_1 and ζ_2 in equation (10) may be recognized as the distances from the ξ-axis to the near and far sides, respectively, of the hyperbola defined by the intersection of the cone $r=0$ and the plane $\eta=0$. Thus, from equation (8), with $\eta=0$, ζ_1 and ζ_2 are recognized as the roots of the equation

$$(r)_{\eta=0} = \frac{1}{\sqrt{M^2-1}} \sqrt{(\zeta-\zeta_1)(\zeta_2-\zeta)} = 0 \tag{11}$$

The limit ξ_1 in equation (10) represents the ξ-coordinate of the vertex of the hyperbola and is defined by the condition $\zeta_1=\zeta_2$, that is, by $\zeta_0=0$. The point (ξ_1, z) is the farthermost downstream point which can affect the point (x, y, z)

BOUNDARY CONDITION

The strength of the distribution of singularities in equation (10) will now be determined by the boundary condition of tangential flow along the airfoil surface. The boundary condition may be expressed as

$$\left(\frac{\partial\phi}{\partial y}\right)_{y=0}=w(x,z,t)$$

$$=v\frac{\partial g}{\partial x}+\frac{\partial g}{\partial t} \tag{12}$$

where the airfoil shape is defined by $y=g(x, z, t)$ and where the two terms represent the normal velocity induced by the airfoil shape and by its own proper motion. It is shown in appendix B and can also be made clear by physical reasoning that as y approaches zero from the positive side ($y\rightarrow+0$)

$$\frac{\partial\phi}{\partial y}=-2\pi(M^2-1)A(x,0,z)f(t)$$

or, briefly,

$$A(x,z)f(t)=-\frac{1}{2\pi(M^2-1)}w(x,z,t) \tag{13}$$

As y approaches zero in the negative half plane, an equal and opposite result is obtained. Equal source distributions on the upper and lower surfaces therefore result in a discontinuous vertical-velocity distribution near the plane $y=0$ and may be used to represent symmetrical thickness distributions. The source distribution representing a thin body with arbitrary thickness distribution is in general unequal on the two surfaces. The effect of thickness is discussed in a separate section. A representation of the mean-camber surface alone may be obtained by placing equal and opposite sources on the under surface in proximity to the sources on the upper surface. The potential ϕ is to be understood in the subsequent analysis to be prefixed by a $\pm$ sign, plus for the upper surface and minus for the lower surface. The vertical velocity will in general be measured positive upward.

It is convenient to express the vertical velocity in equation (13) in separated form

$$w(x,z,t)=W(x,z)w(t) \tag{14}$$

where

$$W(x,z)=-2\pi(M^2-1)A(x,z)$$

$$w(t)=f(t)$$

SURFACE POTENTIAL

The total potential for $y=0$ may now be expressed by means of equations (10) and (14) as

$$\phi(x,z,t)=\int_0^x\int_{\zeta_1}^{\zeta_2}\phi_0\,d\zeta\,d\xi$$

$$=-\frac{1}{2\pi\beta}\int_0^x\int_{\zeta_1}^{\zeta_2}W(\xi,\zeta)\frac{w(t-\tau_1)+w(t-\tau_2)}{\sqrt{(\zeta-\zeta_1)(\zeta_2-\zeta)}}d\zeta\,d\xi \tag{15}$$

where, for $y=0$ (see equations (7a), (10), and (11)),

$$\tau_1=\frac{M(x-\xi)}{c\beta^2}-\frac{\sqrt{(\zeta-\zeta_1)(\zeta_2-\zeta)}}{c\beta}$$

$$\tau_2=\frac{M(x-\xi)}{c\beta^2}+\frac{\sqrt{(\zeta-\zeta_1)(\zeta_2-\zeta)}}{c\beta}$$

$$\zeta_1=z-\zeta_0$$

$$\zeta_2=z+\zeta_0$$

$$\zeta_0=\frac{x-\xi}{\beta}$$

$$\beta=\sqrt{M^2-1}$$

and where it is understood that $W(\xi, \zeta)=0$ at any point off the body or where the integrand is not real.

Equation (15) may be put into a simpler form by substitution of a new variable θ instead of ζ, which is obtained from the relation (see appendix B)

$$2\zeta=(\zeta_2-\zeta_1)\cos\theta+\zeta_2+\zeta_1$$

or

$$\zeta=\zeta_0\cos\theta+z$$

The surface potential (equation (15)) may then be written as

$$\phi(x,z,t)=-\frac{1}{2\pi\beta}\int_0^x\int_0^\pi W[\xi,\zeta(\theta)][w(t-\tau_1)+w(t-\tau_2)]\,d\theta\,d\xi \tag{15a}$$

where

$$\tau_1=\frac{x-\xi}{c\beta^2}(M-\sin\theta)$$

$$\tau_2=\frac{x-\xi}{c\beta^2}(M+\sin\theta)$$

$$\theta=\cos^{-1}\frac{\zeta-z}{x-\xi}\beta$$

Equation (15) represents the central result of the analysis and within the limitations already discussed may be applied to wings of any plan form in steady motion or performing small oscillations. In the stationary or steady case, ϕ does not depend on time and the function $w(t)$ is to be replaced by unity. Then, in equation (15), $w(t-\tau_1)+w(t-\tau_2)$ is to be replaced by 2.

PRESSURE RELATIONS

For the sake of reference, relations for the pressure and the lift and drag forces are given here. The disturbance pressure (local static pressure minus the pressure in the undisturbed stream) may be written as

$$p=-\rho\frac{d\phi}{dt}$$

$$=-\rho\left(\frac{\partial\phi}{\partial t}+v\frac{\partial\phi}{\partial x}\right) \tag{16}$$

The pressure difference (positive if acting downward) at any point (x, z) may be expressed as

$$\Delta p = p_U - p_L$$

where the subscripts U and L refer to the upper and lower surfaces. For the mean-camber surface $p_L = -p_U$ and

$$\Delta p = -2\rho\left(\frac{\partial\phi}{\partial t} + v\frac{\partial\phi}{\partial x}\right) \tag{17}$$

The total forces on the airfoil in the y-direction and x-direction are given by

$$Y = \text{Lift} = \int\int p\, dx\, dz$$

$$X = \text{Drag} = -\int\int p\, dy\, dz$$

where the integration is to be taken over the complete airfoil surface. Expressed as integrations over the plan form

$$\left.\begin{aligned} Y &= \int\int (p_L - p_U)\, dx\, dz \\ X &= \int\int\left[p_U\left(\frac{dy}{dx}\right)_U - p_L\left(\frac{dy}{dx}\right)_L\right] dx\, dz \end{aligned}\right\} \tag{18}$$

It is often convenient to separate the slope terms as follows:

$$\left(\frac{dy}{dx}\right)_U = \alpha + \sigma_U$$

$$\left(\frac{dy}{dx}\right)_L = \alpha + \sigma_L$$

where α is the conventional direction of the main stream with respect to a reference chord, and σ_U and σ_L are the local slopes of the airfoil surfaces measured with respect to the reference chord and positive in the same sense as α.

APPLICATIONS

WING OF INFINITE SPAN AND ZERO SWEEP

For the first application of equation (15) the results for both the oscillating and steady two-dimensional case will be derived. For the harmonically oscillating wing having identical motion in every chordwise section, the vertical velocity can be written in the complex form

$$w(x, t) = W(x)e^{i\omega t}$$

Then

$$w(t-\tau_1) + w(t-\tau_2) = e^{i\omega t}(e^{-i\omega\tau_2} + e^{-i\omega\tau_1})$$

$$= e^{i\omega t}\left(2e^{-i\omega\frac{\tau_2+\tau_1}{2}}\cos\omega\frac{\tau_2-\tau_1}{2}\right)$$

Equation (15a) becomes

$$\phi(x, t) = -\frac{e^{i\omega t}}{\pi\beta}\int_0^x W(\xi)e^{-i\omega\frac{M(x-\xi)}{c\beta^2}}\int_0^\pi \cos\left(\frac{x-\xi}{c}\frac{\omega}{\beta^2}\sin\theta\right) d\theta\, d\xi \tag{19}$$

where $\beta = \sqrt{M^2-1}$.

The integration with respect to θ may be readily performed with the aid of the relation

$$\frac{1}{\pi}\int_0^\pi \cos(\lambda\sin\theta)d\theta = J_0(\lambda)$$

Finally

$$\phi(x, t) = -\frac{e^{i\omega t}}{\beta}\int_0^x W(\xi)I(\xi, x)d\xi \tag{20}$$

where

$$I(\xi, x) = e^{-i\omega\frac{x-\xi}{c}\frac{M}{\beta^2}}J_0\left(\frac{x-\xi}{c}\frac{\omega}{\beta^2}\right) \tag{21}$$

This result for the velocity potential is identical with equation (11) of reference 13 and is used therein as a basis for calculation of the nonstationary two-dimensional case.

In the steady case, $\omega = 0$ and $I(\xi, x) = 1$. The expression for the velocity potential is

$$\phi(x) = -\frac{1}{\beta}\int_0^x W(\xi)d\xi \tag{22}$$

where $W(\xi) = v\frac{dy}{dx}$. This formula or the pressure relation

$$p = -\rho v\frac{\partial\phi}{\partial x} = \rho\frac{v^2}{\beta}\frac{dy}{dx}$$

applied to both the upper and lower surfaces of the airfoil leads to all the results of the Ackeret theory.

WING OF INFINITE SPAN WITH ANGLE OF SWEEP

Consider an infinite wing with angle of sweep Λ (fig. 5), and assume that all sections in the flight direction are identical in shape and that the wing is undergoing harmonic motion. In general, the vertical velocity w can be written in the complex form

$$w(x, z, t) = W(x, z)e^{i\omega t}$$

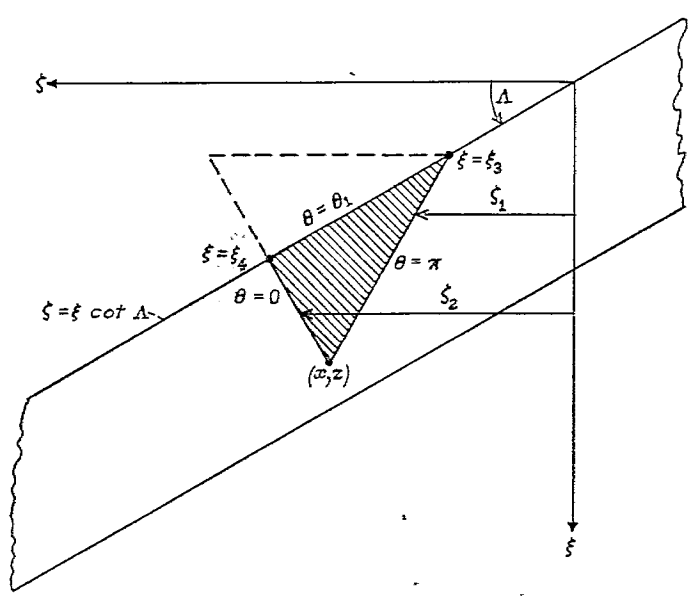

FIGURE 5.—Sketch for wing of infinite span with angle of sweep showing region of integration (shaded).

If each section normal to the leading edge is performing the same motion, the form of $W(x, z)$ is $W(x-z \tan \Lambda)$. If the wing is assumed to perform pure vertical motion alone, then $W(x, z)$ is a constant. If the wing is assumed to rotate about an axis $x=$Constant, then $W(x, z)$ is of the form $W(x)$.

The potential is of the form (fig. 5)

$$\phi(x, z, t)=\int_{\xi_3}^{x}\int_0^{\pi} F\, d\theta\, d\xi-\int_{\xi_3}^{\xi_4}\int_0^{\theta_1} F\, d\theta\, d\xi \tag{23}$$

where

$$F(\xi, \theta, t)=-\frac{1}{2\pi\beta} W(\xi, \zeta(\theta))\left[e^{i\omega(t-\tau_1)}+e^{i\omega(t-\tau_2)}\right]$$

and where

$$\xi_3=\frac{x-z\beta}{1-\beta \cot \Lambda}$$

$$\xi_4=\frac{x+z\beta}{1+\beta \cot \Lambda}$$

$$\theta_1=\cos^{-1}\left(\frac{\xi \cot \Lambda-z}{x-\xi}\beta\right)$$

The values of the limits ξ_3 and ξ_4 are found by solving for ξ in the relations $\zeta_1=\xi \cot \Lambda$ and $\zeta_2=\xi \cot \Lambda$ which represent the intersections of the Mach lines through x with the leading edge. The limit $\theta=\theta_1$ corresponds to $\zeta=\xi \cot \Lambda$, the leading-edge line.

When $W(\xi, z)$ is a constant or a function of ξ only, the velocity potential can be expressed as

$$\phi(x, z, t)=-\frac{e^{i\omega t}}{\beta}\left[\int_{\xi_3}^{x} W(\xi) I(\xi, x) d\xi-\int_{\xi_3}^{\xi_4} W(\xi) I_1(\xi, x, z) d\xi\right] \tag{24}$$

where $I(\xi, x)$ is as defined previously and

$$I_1(\xi, x, z)=\frac{1}{\pi} e^{-i\omega\frac{x-\xi}{c}\frac{M}{\beta^2}}\int_0^{\theta_1}\cos\left(\frac{x-\xi}{c}\frac{\omega}{\beta^2}\sin\theta\right) d\theta \tag{25}$$

Observe that the integral involved in equation (25) for I_1 reduces to the Bessel function of zero order when $\theta_1=\pi$ as in equation (19). This interesting integral may therefore be called an "incomplete" Bessel function of zero order. Systematic investigation of its properties would appear to be desirable.

For the infinite swept wing in the steady case the frequency ω may be made equal to zero in equation (23). Consider as a simple example the case of a thin wing at a small constant angle of attack α, that is, $\frac{dy}{dx}=-\alpha$. Let the angle of sweep be less than the complement of the Mach angle, that is, $\beta \cot \Lambda>1$. (Otherwise the case involves the mixed-supersonic-flow conditions.) From equation (24) with $\omega=0$, $I(\xi, x)=1$, and $I_1(\xi, x, z)=\frac{\theta_1}{\pi}$,

$$\phi(x,z)=\frac{v\alpha}{\beta}\left[\int_{\xi_3}^{x} d\xi-\frac{1}{\pi}\int_{\xi_3}^{\xi_4}\cos^{-1}\left(\frac{\xi \cot \Lambda-z}{x-\xi}\beta\right) d\xi\right]$$
$$=v\alpha\frac{x \cot \Lambda-z}{\sqrt{\beta^2 \cot^2 \Lambda-1}} \tag{26}$$

The local pressure difference is given by

$$p=\frac{2\rho v^2\alpha}{\beta}\frac{\beta \cot \Lambda}{\sqrt{\beta^2 \cot^2 \Lambda-1}} \tag{27}$$

This equation reduces, for $\Lambda=0$, to the Ackeret result

$$p_0=\frac{2\rho v^2\alpha}{\beta}$$

Let the index n refer to quantities measured normal to the leading edge. Then

$$\alpha_n=\alpha \sec \Lambda$$

$$v_n=v \cos \Lambda$$

$$M_n=\frac{v_n}{c}=M \cos \Lambda$$

and

$$p=\frac{2\rho v_n^2\alpha_n}{\sqrt{M_n^2-1}}$$

a result similar in form to the expression for p_0 and already stated by Busemann (reference 17) in 1935. (See also reference 6.)

The harmonically oscillating case with $W(x, z)$ assumed to be of the form $W(x-z \tan \Lambda)$ leads in a similar manner to a result analogous to equation (20).

RECTANGULAR WING OF FINITE SPAN (ZERO SWEEP)

Consider a harmonically oscillating rectangular wing of finite span as in figure 6. Region I is described as purely supersonic and region II as mixed supersonic. The higher the aspect ratio and the stream Mach number, the relatively smaller the region II becomes.

The potential for region I for identical motion of each chordwise section is exactly that given for the infinite wing in equation (20); however, more general types of motion involving spanwise variation may also be treated. For example, let the wing perform harmonic oscillations in vertical bending and in torsion about a spanwise axis $x=x_0$ in certain prescribed spanwise modes. Then, with α and h used to describe angle of attack and vertical position (fig. 7),

$$\left.\begin{aligned}\alpha&=\alpha_1(z)\alpha_2(t)\\ h&=h_1(z)h_2(t)\end{aligned}\right\} \tag{28}$$

where $\alpha_1(z)$ and $h_1(z)$ represent spanwise modes and

$$\alpha_2(t)=\alpha_0 e^{i\omega t}$$

$$h_2(t)=h_0 e^{i\omega t}$$

and α_0 and h_0 are constant complex amplitudes. The vertical velocity (w measured positive upward, h positive downward) may be expressed as

$$w(x, z, t)=-[v\alpha+\dot{h}+(x-x_0)\dot{\alpha}] \tag{29}$$

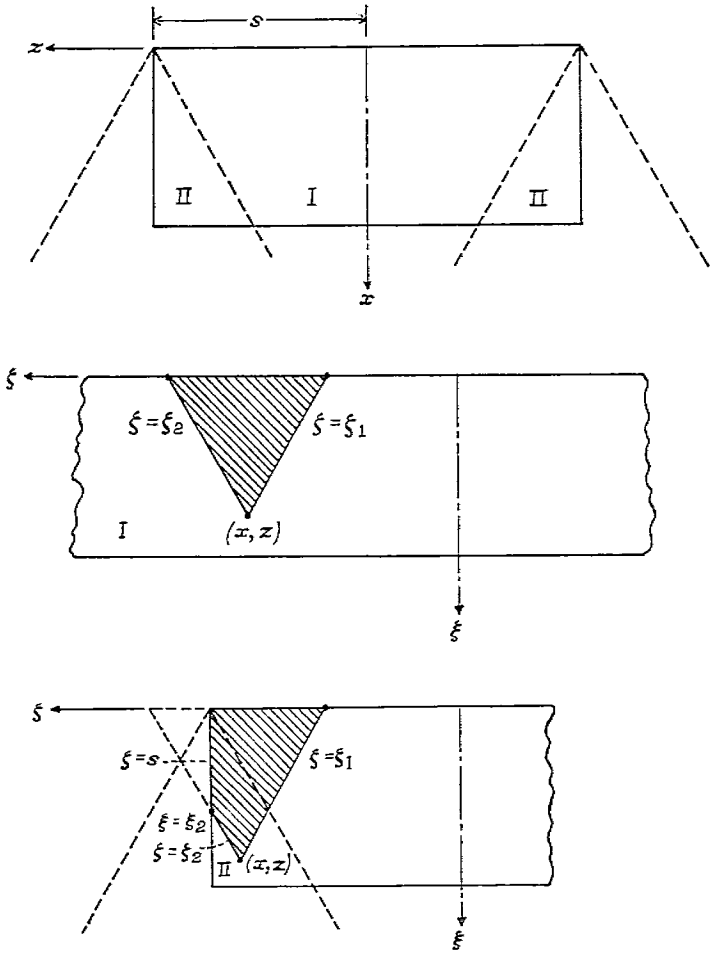

FIGURE 6.—Sketch for rectangular wing.

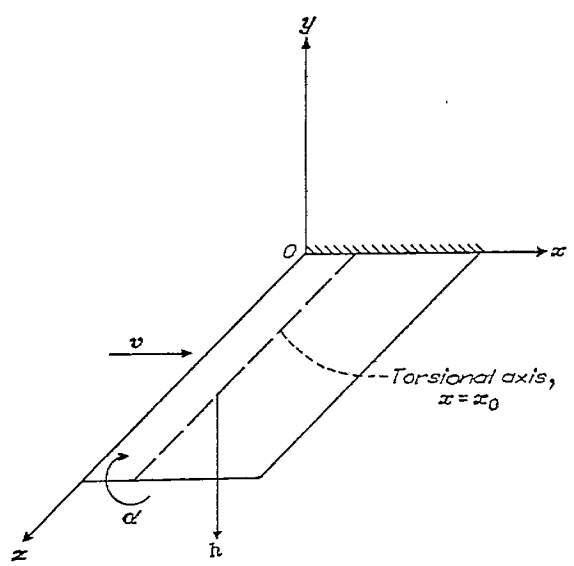

FIGURE 7.—Sketch for oscillating rectangular wing (h is positive downward, α is positive clockwise).

Let the potential (equation (15)) be separated into the form

$$\phi=\phi_\alpha+\phi_h+\phi_{\dot\alpha} \tag{30}$$

where the various ϕ's are associated with the corresponding variables in equation (29).

With the use of equations (15a), these potentials may be expressed as

$$\left.\begin{aligned}
\phi_\alpha&=\frac{v\alpha_2}{\pi\beta}\int_0^x e^{-iq}\int_0^\pi \alpha_1(\zeta)\cos\left(\frac{q}{M}\sin\theta\right)d\theta\,d\xi\\
\phi_h&=\frac{h_2}{\pi\beta}\int_0^x e^{-iq}\int_0^\pi h_1(\zeta)\cos\left(\frac{q}{M}\sin\theta\right)d\theta\,d\xi\\
\phi_{\dot\alpha}&=\frac{\dot\alpha_2}{\pi\beta}\int_0^x e^{-iq}\int_0^\pi (\xi-x_0)\alpha_1(\zeta)\cos\left(\frac{q}{M}\sin\theta\right)d\theta\,d\xi
\end{aligned}\right\} \tag{31}$$

where

$$q=\frac{\omega M(x-\xi)}{c(M^2-1)}$$

and, expressed as a function of θ,

$$\alpha_1(\zeta)=\alpha_1(z+\zeta_0\cos\theta)$$

$$h_1(\zeta)=h_1(z+\zeta_0\cos\theta)$$

If the modal functions in equations (31) are $\alpha_1=h_1=1$, the potential corresponds to that given by equation (20) for the two-dimensional case. (See also equation (14) of reference 13.) It is of interest to consider modal functions for α_1 and h_1 of the type $(\zeta/s)^n$ where s is the semispan. For modal functions of this form the typical integral involved in equations (31) may be expressed as

$$F_n=\int_0^\pi (z+\zeta_0\cos\theta)^n\cos\left(\frac{q}{M}\sin\theta\right)d\theta \tag{32}$$

With the substitution of $\frac{\pi}{2}-\theta$ for θ, F_n may be written as

$$F_n=\int_0^{\frac{\pi}{2}}(z+\zeta_0\sin\theta)^n\cos\left(\frac{q}{M}\cos\theta\right)d\theta+$$

$$\int_0^{\frac{\pi}{2}}(z-\zeta_0\sin\theta)^n\cos\left(\frac{q}{M}\cos\theta\right)d\theta$$

The further reduction of F_n is made with the aid of the following relation (reference 21):

$$J_k(\lambda)=\frac{2\left(\frac{1}{2}\lambda\right)^k}{\Gamma\left(k+\frac{1}{2}\right)\Gamma\left(\frac{1}{2}\right)}\int_0^{\frac{\pi}{2}}\cos(\lambda\cos\theta)\sin^{2k}\theta\,d\theta$$

For example, the case $n=0$ corresponds to constant modes and yields for the potential the result already given by equation (20). The case $n=1$ corresponds to linear modes and the function F_1 becomes

$$F_1=\pi z J_0\left(\frac{q}{M}\right)$$

This relation utilized in the equation for the potential yields a result that is the two-dimensional-case result multiplied

by the factor z/s. The case $n=2$ corresponds to parabolic modes and the function F_2 becomes

$$F_2=\pi z^2 J_0\left(\frac{q}{M}\right)+\pi\frac{c}{\omega}(x-\xi)J_1\left(\frac{q}{M}\right)$$

When F_2 is used in equations (31), the J_0 term yields an integral of the type given by equation (20). With the use of the relation $J_1(\lambda)=-J_0'(\lambda)$, the J_1 term also yields an integral of the same form. This type of reduction to the form of equation (20) may be made in general for any integral index n by means of the recurrence formulas for Bessel functions, and thus use may be made of the numerical procedures used for equation (30). (See reference 13.)

It may be of interest to treat the potential for the mixed supersonic region II (fig. 6) as though it were part of a purely supersonic region. The equations corresponding to equations (31) are

$$\phi_\alpha\approx\frac{v\alpha_2}{\pi\beta}\int_0^x e^{-iq}\int_0^\pi \alpha_1(\zeta)\cos\left(\frac{q}{M}\sin\theta\right)d\theta\, d\xi-$$
$$\frac{v\alpha_2}{\pi\beta}\int_0^{\xi_2} e^{-iq}\int_0^{\theta_2}\alpha_1(\zeta)\cos\left(\frac{q}{M}\sin\theta\right)d\theta\, d\xi \qquad (33)$$

and similar equations for $\phi_{\dot{h}}$ and $\phi_{\dot{\alpha}}$. The limit ξ_2 is found as the value of ξ for which $\zeta_2=s$ or

$$\xi_2=x-(s-z)\beta$$

The limit $\theta=0$ corresponds to $\zeta=\zeta_2$ and the limit $\theta=\theta_2$ corresponds to $\zeta=s$ or, from equation (15a),

$$\theta_2=\cos^{-1}\left(\frac{s-z}{x-\xi}\beta\right)$$

The last term in equation (33) leads to integrals of the "incomplete" Bessel function type as mentioned for the case of the infinite wing with angle of sweep.

The foregoing results for the oscillating rectangular wing will now be specialized to the steady case ($\omega=0$, $q=0$, $\alpha_1(\zeta)=1$, $\alpha_2(t)=\alpha$, the constant angle of attack). Then, from equations (31), the velocity potential for region I, is

$$\phi_\alpha=\frac{v\alpha}{\beta}x \qquad (34)$$

For region II, from equation (33),

$$\phi_\alpha\approx\frac{v\alpha}{\beta}x-\frac{v\alpha}{\pi\beta}\int_0^{\xi_2}\cos^{-1}\left(\frac{s-z}{x-\xi}\beta\right)d\xi \qquad (35)$$

The actual integration in equation (35) may be easily performed but is not required for the purpose of obtaining the local pressure.

The local-pressure difference is directly obtained for regions I and II from equations (34) and (35) as

$$\left.\begin{aligned} p_{\mathrm{I}}&=\frac{2\rho v^2\alpha}{\beta}\\ p_{\mathrm{II}}&\approx\frac{2\rho v^2\alpha}{\beta}\left[1-\frac{1}{\pi}\cos^{-1}\left(\frac{s-z}{x}\beta\right)\right]\end{aligned}\right\} \qquad (36)$$

It may be observed that p is constant along rays from the tip $\frac{s-z}{x}=\text{Constant}$. Along the ray corresponding to the Mach line from the tip, $\frac{s-z}{x}\beta=1$ and p takes on the constant value p_{I}. Along the ray corresponding to the tip $z=s$, half of this value is obtained. This edge condition is physically incorrect since the assumption of the independence of the two surfaces of the airfoil is not correct near the tip.

This particular problem has been treated by Busemann (reference 4) by his method of conical or perspective symmetry. The condition along the ray corresponding to the tip is $p=0$ and Busemann's result for region II is

$$p_{\mathrm{II}}=\frac{2\rho v^2\alpha}{\beta}\frac{1}{\pi}\cos^{-1}\left(1-\frac{2(s-z)}{x}\beta\right)$$

The total lift over region II is one-half of that of an equal area of region I. A comparison of this result and equations (36) is shown in figure 8. This comparison gives an indication of the errors involved in the assumption of independence of the two surfaces near the rectangular tip and, conversely, it gives an indication of the appropriate correction factors required to allow for the tip effect. It appears that equations (36) overestimate the lift over all of region II by a factor $1-\frac{2}{\pi}$ or by approximately 36 percent. Actually, equations (36) apply to the edge of a rectangular wing adjacent to a straight surface barrier at zero angle of attack.

THICKNESS DISTRIBUTION

It has already been remarked that the treatment employed in the analysis mainly for the mean-camber surface can also be applied to obtain the effect of thickness. In equation (15) the vertical velocity $W(\xi,\zeta)$ may be specified for both the upper and the lower surface.

As an example, consider a plan form such as that shown in figure 9 in steady supersonic flow. Let the airfoil section shape, for convenience chosen symmetrical and independent of span, be defined in the center section by $y=g(x)$ (and in any other section by $y=g(x-z\tan\Lambda)$). Then, for the upper surface,

$$W(x,z)=v\alpha+vg'$$

and, for the lower surface,

$$W(x,z)=v\alpha-vg'$$

where g' is the derivative of g with respect to its argument.

The velocity potentials in the various regions in figure 9 are of the form

$$\left.\begin{aligned}\phi_{\mathrm{I}}&=\int_{\xi_3}^{x}\int_0^\pi F\,d\zeta\,d\xi-\int_{\xi_3}^{\xi_4}\int_0^{\theta_1}F\,d\theta\,d\xi\\ \phi_{\mathrm{II}}&=\phi_{\mathrm{I}}-\left(\int_{\xi_5}^{\xi_4}\int_{\theta_1}^{\theta_2}F\,d\theta\,d\xi+\int_{\xi_4}^{\xi_2}\int_0^{\theta_4}F\,d\theta\,d\xi\right)\\ \phi_{\mathrm{III}}&=\phi_{\mathrm{I}}-\left(\int_{\xi_3}^{0}\int_{\theta_1}^{\pi}F\,d\theta\,d\xi+\int_0^{\xi_6}\int_{\theta_4}F\,d\theta\,d\xi\right)\end{aligned}\right\} \qquad (37)$$

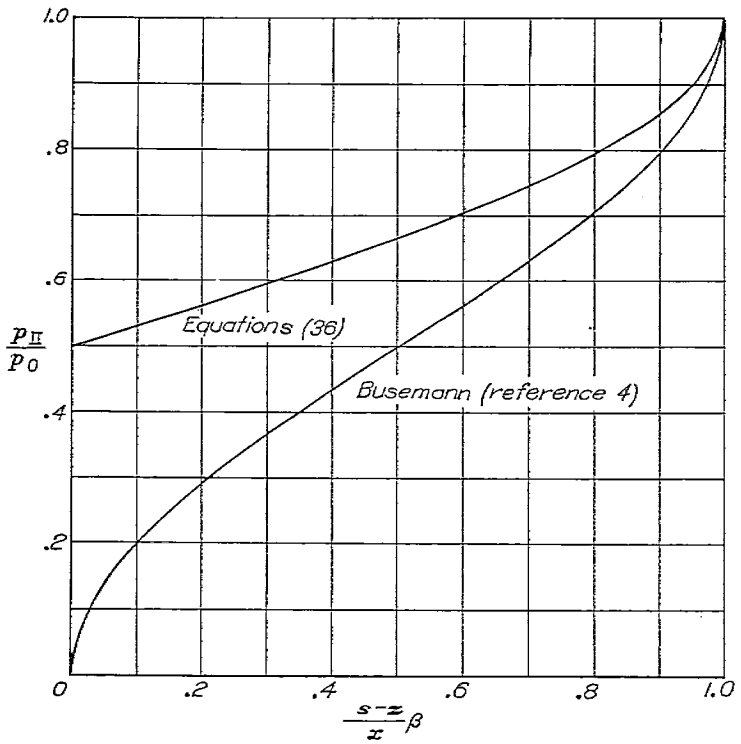

FIGURE 8.—Pressure for rectangular edge as given by Busemann and by the approximation given in equations (36).

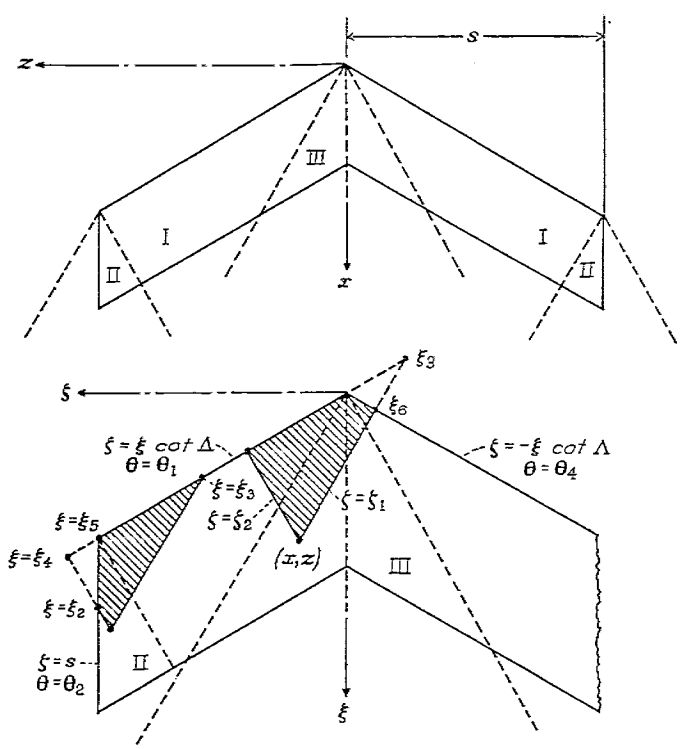

FIGURE 9.—Sketch for swept wing for the case $A>1$ showing regions I, II, III.

The limits in the foregoing integrals are as follows: the limits $\theta=\theta_1$ and $\theta=\theta_4$ correspond, respectively, to the leading-edge lines $\zeta=\xi$ cot Λ and $\zeta=-\xi$ cot Λ; $\theta=0$ and $\theta=\pi$ correspond, respectively, to the Mach lines $\zeta=\zeta_2$ and $\zeta=\zeta_1$; ξ_3 and ξ_6 are obtained, respectively, from the relations $\zeta_1=\xi$ cot Λ and $\zeta_1=-\xi$ cot Λ; $\theta=\theta_2$ corresponds to $\zeta=s$; ξ_2 is obtained from the relation $\zeta_2=s$; ξ_4 is obtained from $\zeta_2=\xi$ cot Λ; and ξ_5 is the value of ξ for the leading edge of the tip. Then

$$\theta_1=\cos^{-1}\left(\frac{\xi \cot \Lambda-z}{x-\xi}\beta\right)$$

$$\theta_4=\cos^{-1}\left(\frac{-\xi \cot \Lambda-z}{x-\xi}\beta\right)$$

$$\theta_2=\cos^{-1}\frac{s-z}{x-\xi}\beta$$

$$\xi_3=\frac{x-z\beta}{1-A}$$

$$\xi_4=\frac{x+z\beta}{1+A}$$

$$\xi_6=\frac{x-z\beta}{1+A}$$

$$\xi_2=x-(s-z)\beta$$

$$\xi_5=s \tan \Lambda$$

$$A=\beta \cot \Lambda$$

If, for example, the distribution function F is a constant K,

$$\phi_{I}=K\frac{x \cot \Lambda-z}{A^2-1}$$

$$\phi_{II}=\phi_{I}-\frac{K}{\pi}\int_{\xi_3}^{\xi_2}\theta_2 d\xi+\frac{K}{\pi}\int_{\xi_3}^{\xi_4}\theta_1 d\xi$$

$$\phi_{III}=\phi_{I}-\frac{K}{\pi}\int_{\xi_3}^{0}(\pi-\theta_1)\,d\xi+\int_{0}^{\xi_6}(\pi-\theta_4)\,d\xi$$

The corresponding local pressures are

$$p_{I}=\frac{\rho v K}{\beta}\frac{A}{\sqrt{A^2-1}}$$

$$p_{II}=\frac{\rho v K}{\beta}\frac{A}{\sqrt{A^2-1}}\left(1-\frac{1}{\pi}\cos^{-1}\frac{1+AB}{A+B}\right)$$

$$p_{III}=\frac{\rho v K}{\beta}\frac{A}{\sqrt{A^2-1}}\frac{1}{\pi}\left(\cos^{-1}\frac{1+AC}{A+C}+\cos^{-1}\frac{1-AC}{A-C}\right)$$

$$=\frac{\rho v K}{\beta}\frac{A}{\sqrt{A^2-1}}\frac{2}{\pi}\tan^{-1}\sqrt{\frac{A^2-1}{1-C^2}}$$

where

$$A=\beta \cot \Lambda$$

$$B=\frac{(s-z)\beta}{x-s \tan \Lambda}$$

$$C=\frac{z}{x}\beta$$

The constant K may be interpreted as $v\alpha$ associated with constant angle of attack. In this case, region II is to be regarded as a mixed supersonic region and the result given is not the appropriate solution for this region. If the constant K is interpreted as $g'=$Constant, the results are applicable to a thin symmetrical wedge of half vertex angle K and may be employed to yield the wave drag according to the linearized treatment.

Jones (reference 5) treats symmetrical airfoils of various plan forms at zero lift by use of pressure potential. The use of velocity potential leads to the same results as given in reference 5. Thus, equations (13) and (14) of reference 5 for a wedge correspond to the preceding results. The velocity potential in general is more useful to treat pressure distributions for a given body; whereas, the pressure potential may be more readily adapted to treat airfoil shapes and plan forms associated with desired types of distributions of pressure.

TRIANGULAR PLAN FORM

The triangular wing (fig. 10) extending across the Mach lines from the vertex may serve as a final example. For the steady case of a vanishingly thin surface at angle of attack α, the velocity potentials and pressure relations for regions I and III are equivalent to those just discussed in the preceding section. The lift ΔL on a strip Δx of the triangle located at abscissa x from the vertex is given by

$$\Delta L=\Delta x\int_{-x\cot\Lambda}^{x\cot\Lambda}\Delta p\,dz$$

$$=\left[\frac{4\rho v^2\alpha}{\beta^2}A\sqrt{\frac{A-1}{A+1}}+\frac{4\rho v^2\alpha}{\beta^2}A\left(1-\sqrt{\frac{A-1}{A+1}}\right)\right]x\,\Delta x$$

where the two terms correspond to the integrations over regions I and III, respectively, and where $A=\beta\cot\Lambda$. Then,

$$\Delta L=\frac{4\rho v^2\alpha}{M^2-1}Ax\,\Delta x$$

The area of the strip is $2x\,\Delta x\cot\Lambda$, and hence the lift coefficient is independent of x and equal to

$$C_L=\frac{\Delta L}{\left(\frac{1}{2}\rho v^2\right)\left(\frac{2Ax\,\Delta x}{\beta}\right)}$$

$$=\frac{4\alpha}{\beta}$$

Gurevich (reference 9) treats this case, and his relations can be shown to be equivalent to the foregoing ones. The pressure distribution is illustrated in figure 10, where p_0, the reference pressure, is $2\rho v^2\alpha/\beta$. Observe that the pressure area above the unit ordinate cancels the area of pressure deficiency below the unit ordinate. Also shown in figure 10 is the distribution of pressure as the half vertex angle of the triangle approaches the Mach angle.

The triangular wing inside the Mach cone from the vertex requires a more elaborate treatment (references 7 to 9).

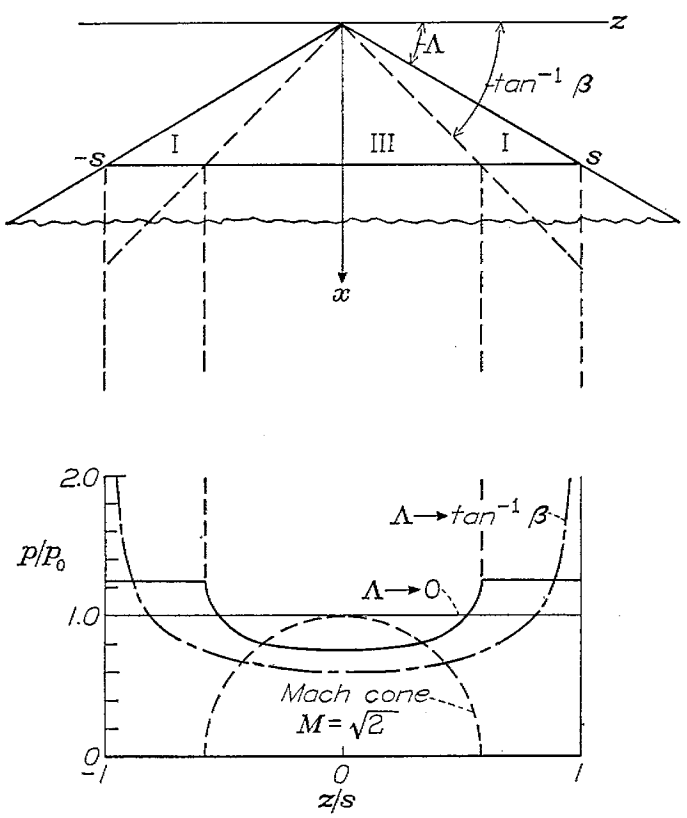

FIGURE 10.—Triangular wing in a supersonic stream and pressure distribution. Case sketched corresponds to $\Lambda=30°$, $M=\sqrt{2}$.

LANGLEY MEMORIAL AERONAUTICAL LABORATORY,
NATIONAL ADVISORY COMMITTEE FOR AERONAUTICS,
LANGLEY FIELD, VA., *June 4, 1947.*

APPENDIX A

DIFFERENTIAL EQUATION FOR THE VELOCITY POTENTIAL

A derivation of equation (4) is given briefly here. The condition for irrotational flow is

$$\text{curl } \mathbf{v}=0 \tag{A1}$$

and this relation implies that a scalar velocity potential ϕ exists, such that

$$\mathbf{v}=\text{grad } \phi \tag{A2}$$

The general equation of continuity

$$\frac{\partial \rho}{\partial t}+\text{div } \rho\mathbf{v}=0$$

may be written as

$$\frac{1}{\rho}\frac{D\rho}{Dt}+\nabla^2\phi=0 \tag{A3}$$

where differentiation following the particle is denoted by

$$\frac{D}{Dt}=\frac{\partial}{\partial t}+(\mathbf{v}\cdot\text{grad})$$

and $\nabla^2=\text{div grad}$ is the Laplacian operator.

From Euler's equations, or from the general Bernoulli relation,

$$\frac{\partial\phi}{\partial t}+\frac{v^2}{2}+\int\frac{dp}{\rho}=0 \tag{A4}$$

where a space constant function of time has been included in ϕ, and where it has been assumed that p is a function of ρ only. With the use of equation (A4) and the acoustic relation,

$$c^2=\frac{dp}{d\rho}$$

where c is the local variable speed of sound, it follows that

$$\text{grad}\left(\frac{\partial\phi}{\partial t}+\frac{v^2}{2}\right)=-\frac{1}{\rho}\text{grad } p$$

$$=-\frac{c^2}{\rho}\text{grad } \rho$$

and

$$\frac{\partial}{\partial t}\left(\frac{\partial\phi}{\partial t}+\frac{v^2}{2}\right)=-\frac{1}{\rho}\frac{\partial p}{\partial t}$$

$$=-\frac{c^2}{\rho}\frac{\partial\rho}{\partial t}$$

With the aid of these two relations the first term in equation (A3) becomes

$$\frac{1}{\rho}\frac{D\rho}{Dt}=-\frac{1}{c^2}\left(\frac{\partial^2\phi}{\partial t^2}+\frac{\partial v^2}{\partial t}+\mathbf{v}\cdot\text{grad}\,\frac{v^2}{2}\right)$$

For small perturbations from the main stream of velocity v in the x-direction, c may be considered equal to the constant speed of sound in the undisturbed medium and, in comparison with v, $v_y=0$, $v_z=0$, and $v_x=v$. Then

$$\frac{1}{\rho}\frac{D\rho}{Dt}\approx-\frac{1}{c^2}\left(\frac{\partial^2\phi}{\partial t^2}+2v\frac{\partial^2\phi}{\partial x\partial t}+v^2\frac{\partial^2\phi}{\partial x^2}\right)$$

With this relation used in equation (A3) the equation for the velocity potential may be put in the form given in equation (4) of the analysis.

APPENDIX B

EVALUATION OF $\left(\frac{\partial\phi}{\partial y}\right)_{y\to 0}$

In order to determine the limit of $\frac{\partial\phi}{\partial y}$ as $y\to 0$, it is convenient to make use of the following substitution:

$$2\zeta=(\zeta_2-\zeta_1)\cos\theta+\zeta_2+\zeta_1 \tag{B1}$$

The expression for ϕ (equation (10)) may be written with the aid of the following relations (see equation (11)):

$$r=\frac{1}{\beta}\sqrt{(\zeta-\zeta_1)(\zeta_2-\zeta)}$$

$$=\frac{1}{\beta}\frac{\zeta_2-\zeta_1}{2}\sin\theta$$

$$=\frac{1}{\beta}\zeta_0\sin\theta$$

$$\phi=\beta\int_0^{\xi_1}\int_0^{\pi}A(\xi,0,z+\zeta_0\cos\theta)(f_1+f_2)d\theta d\xi \tag{B2}$$

where

$$f_1=f(t-\tau_1)=f\left(t-\frac{M(x-\xi)}{c\beta^2}+\frac{\zeta_0\sin\theta}{c\beta}\right)$$

$$f_2=f(t-\tau_2)=f\left(t-\frac{M(x-\xi)}{c\beta^2}-\frac{\zeta_0\sin\theta}{c\beta}\right)$$

By the rule for differentiation of a definite integral,

$$\frac{1}{\beta}\frac{\partial\phi}{\partial y}=\frac{\partial\xi_1}{\partial y}\int_0^\pi 2A(\xi_1,0,z)f\left(t-\frac{My}{c\beta}\right)d\theta+$$
$$\int_0^{\xi_1}\int_0^\pi (f_1+f_2)\frac{\partial A}{\partial y}d\theta\, d\xi+$$
$$\int_0^{\xi_1}\int_0^\pi A\frac{\partial}{\partial y}(f_1+f_2)\, d\theta\, d\xi \tag{B3}$$

Make use of the following relations:

$$\frac{\partial A}{\partial y}=\frac{\partial A}{\partial(z+\zeta_0\cos\theta)}\frac{\partial(z+\zeta_0\cos\theta)}{\partial y}$$
$$=\frac{\partial A}{\partial z}\frac{\partial\zeta_0}{\partial y}\cos\theta$$
$$\frac{\partial(f_1+f_2)}{\partial y}=\frac{\partial f_1}{\partial(t-\tau_1)}\frac{\partial(t-\tau_1)}{\partial y}+\frac{\partial f_2}{\partial(t-\tau_2)}\frac{\partial(t-\tau_2)}{\partial y}$$
$$=\frac{1}{c\beta}\frac{\partial}{\partial t}(f_1-f_2)\frac{\partial\zeta_0}{\partial y}\sin\theta$$

Then, by integration by parts, the next to the last integral in equation (B3) becomes $\left(\text{with } \cos\theta\, d\theta=dv,\ \frac{\partial A}{\partial z}\frac{\partial\zeta_0}{\partial y}(f_1+f_2)=u\right)$

$$\int_0^{\xi_1}\left[\frac{\partial A}{\partial z}\frac{\partial\zeta_0}{\partial y}(f_1+f_2)\sin\theta\right]_0^\pi d\xi-$$
$$y\int_0^{\xi_1}\int_0^\pi\left[(f_1+f_2)\frac{\partial^2 A}{\partial z^2}\sin^2\theta-\frac{1}{c\beta}\frac{\partial A}{\partial z}\frac{\partial}{\partial t}(f_1-f_2)\sin\theta\cos\theta\right]d\theta\, d\xi$$

where the first term vanishes because $\sin\theta=0$ at $\theta=0$ and $\theta=\pi$. Similarly (with $\sin\theta\, d\theta=dv$, $\frac{A}{c\beta}\frac{\partial\zeta_0}{\partial y}\frac{\partial}{\partial t}(f_1-f_2)=u$), the last integral in equation (B3) becomes

$$-\int_0^{\xi_1}\left[\frac{A}{c\beta}\frac{\partial\zeta_0}{\partial y}\frac{\partial}{\partial t}(f_1-f_2)\cos\theta\right]_0^\pi d\xi+$$
$$y\int_0^{\xi_1}\int_0^\pi\left[\frac{1}{c\beta}\frac{\partial A}{\partial z}\frac{\partial}{\partial t}(f_1-f_2)\sin\theta\cos\theta-\right.$$
$$\left.\frac{A}{c\beta^2}\frac{\partial^2}{\partial t^2}(f_1+f_2)\cos^2\theta\right]d\theta\, d\xi$$

where the first term vanishes because $f_1=f_2$ at $\theta=0$ and $\theta=\pi$.

Then, as y approaches zero from the positive side, there results in the limit a contribution only from the first integral in equation (B3),

$$\left(\frac{\partial\phi}{\partial y}\right)_{y\to+0}=-2\pi(M^2-1)A(x,0,z)f(t) \tag{B4}$$

Since $\frac{\partial\xi_1}{\partial y}$ changes sign as y changes sign, it follows that as y approaches zero from the negative side an equal and opposite result is obtained.

REFERENCES

1. Von Kármán, Theodor, and Moore, Norton B.: Resistance of Slender Bodies Moving with Supersonic Velocities, with Special Reference to Projectiles. Trans. A.S.M.E., vol. 54, no. 23, Dec. 15, 1932, pp. 303–310.
   Also,
   Von Kármán, Th.: The Problem of Resistance in Compressible Fluids. GALCIT Pub. No. 75, 1936. (From R. Accad. d'Italia, cl. sci. fis., mat. e nat., vol. XIV, 1936.)
2. Prandtl, L.: Theorie des Flugzeugtragflügels im zusammendrückbaren Medium. Luftfahrtforschung, Bd. 13, Nr. 10, Oct. 12, 1936, pp. 313–319.
3. Schlichting, H.: Airfoil Theory at Supersonic Speed. NACA TM No. 897, 1939.
4. Busemann, Adolf: Infinitesimale kegelige Überschallströmung. Schriften der Deutschen Akademie der Luftfahrtforschung, Bd. 7B, Heft 3, 1943, pp. 105–121. (Also available as NACA TM No. 1100, 1947.)
5. Jones, Robert T.: Thin Oblique Airfoils at Supersonic Speed. NACA Rep. No. 851, 1946.
6. Puckett, Allen E.: Supersonic Wave Drag of Thin Airfoils. Jour. Aero. Sci., vol. 13, no. 9, Sept. 1946, pp. 475–484.
7. Stewart, H. J.: The Lift of a Delta Wing at Supersonic Speeds. Quarterly Appl. Math., vol. IV, no. 3, Oct. 1946, pp. 246–254.
8. Brown, Clinton E.: Theoretical Lift and Drag of Thin Triangular Wings at Supersonic Speeds. NACA Rep. No. 839, 1946.
9. Gurevich, M. I.: Lift Force of an Arrow-Shaped Wing. Appl. Math. and Mech. (Moscow), vol. X, no. 4, 1946, p. 517.
10. Possio, C.: L'Azione aerodinamica sul profilo oscillante alle velocità ultrasonore. Acta, Pont. Acad. Sci., vol. I, no. 11, 1937, pp. 93–106.
11. V. Borbely, S.: Aerodynamic Forces on a Harmonically Oscillating Wing at Supersonic Velocity (2-Dimensional Case). R.T.P. Translation No. 2019, British Ministry of Aircraft Production. (From Z.f.a.M.M., Bd. 22, Heft 4, Aug. 1942, pp. 190–205.)
12. Temple, G., and Jahn, H. A.: Flutter at Supersonic Speeds. Part I. Mid-Chord Derivative Coefficients for a Thin Aerofoil at Zero Incidence. R. & M. No. 2140, British A. R. C., 1945.
13. Garrick, I. E., and Rubinow, S. I.: Flutter and Oscillating Air Force Calculations for an Airfoil in a Two-Dimensional Supersonic Flow. NACA Rep. No. 846, 1946.
14. Schwarz, L.: Ebene instationäre Theorie der Tragfläche bei Überschallgeschwindigkeit. Jahrb. 1943 der deutschen Luftfahrtforschung, I A 010, Stephan Geibel & Co. (Altenburg/Thür.), pp. 1–8. (Available as AAF Translation No. F-TS-934-RE, Air Materiel Command, Wright Field, Dayton, Ohio, March 1947.)
15. Höhl, H.: Zweidimensionale Tragflächentheorie im Überschallgebiet. Forschungsbericht Nr. 1903, Deutsche Luftfahrtforschung (Göttingen), 1944.
16. Küssner, H. G.: General Airfoil Theory. NACA TM No. 979, 1941.
17. Busemann, A.: Aerodynamischer Auftrieb bei Überschallgeschwindigkeit. Luftfahrtforschung, Bd. 12, Nr. 6, Oct. 3, 1935, pp. 210–220.
18. Hadamard, Jacques: Lectures on Cauchy's Problem in Linear Partial Differential Equations. Yale Univ. Press (New Haven), 1923.
19. Rott, Nikolaus: Das Feld einer raschbewegten Schallquelle. Mitteilung no. 9, Inst. Aerod. Tech. H. S. Zürich, Gebr. Leemann & Co. (Zürich), 1945.
20. Küssner, H. G.: Lösungen der klassischen Wellengleichung für bewegte Quellen. UM Nr. 3217, Deutsche Luftfahrtforschung (Göttingen), 1945.
21. Watson, G. N.: A Treatise on the Theory of Bessel Functions. Second ed., The Macmillan Co., 1944, p. 48.