REPORT No. 883

FLIGHT MEASUREMENTS OF THE LATERAL CONTROL CHARACTERISTICS OF NARROW-CHORD AILERONS ON THE TRAILING EDGE OF A FULL-SPAN SLOTTED FLAP

By Richard H. Sawyer

SUMMARY

Results are presented of flight tests made to determine the effect of flap deflection on the lateral control characteristics of a modified Brewster F2A–2 airplane equipped with partial-span narrow-chord ailerons on the trailing edge of a full-span NACA slotted flap. The investigation included determination of the rolling and yawing characteristics of the airplane in abrupt aileron rolls with the slotted flap at various settings ranging from 0° to about 40°.

The results showed that the effectiveness of the ailerons was greatly reduced at flap deflections greater than about 20°. For flap deflections up to about 20°, the aileron effectiveness was about the same as with flaps retracted, but the adverse yawing velocity developed in the abrupt aileron rolls was somewhat increased. This increase in the adverse yawing velocity, however, was not considered objectionable by the pilot.

INTRODUCTION

Much interest has been evidenced in the possibility of using narrow-chord ailerons on the flap trailing edge to provide lateral control with the use of full-span slotted flaps. Wind-tunnel tests (references 1 and 2) indicated that such an arrangement would probably be unsatisfactory because of a serious decrease in the effectiveness of the ailerons at large flap deflections. Flight tests have subsequently been made of a Brewster F2A–2 airplane fitted with an experimental wing incorporating full-span slotted flaps and narrow-chord ailerons on the flap trailing edge.

The experimental lateral-control installation in the F2A–2 airplane was originally arranged so that the flap-trailing-edge ailerons were operated only with the flaps retracted or at small deflections, and slot-lip ailerons were used at larger flap deflections. The results of flight tests of such an arrangement are presented in reference 3.

The present report gives the results of flight tests of the narrow-chord ailerons on the flap trailing edge with flap deflections of 0°, 21°, 32°, and 42°. In addition to the determination of the rolling effectiveness of these ailerons, attention was given to the yawing motions introduced by the ailerons as affected by flap deflection.

AIRPLANE

A Brewster F2A–2 airplane, fitted with a special wing incorporating full-span NACA slotted flaps and both partial-span flap-trailing-edge ailerons and slot-lip ailerons, was used for the tests.

A complete description of the airplane is given in reference 3. Airplane dimensions pertinent to the present tests are given as follows:

Wing:	
Span, ft	35
Area (including 30.8 sq ft of fuselage), sq ft	208.9
Airfoil section:	
Root	NACA 2301S
Tip	NACA 23009
Wing flaps (NACA slotted type):	
Total area, sq ft	44.8
Flap semispan	14 ft 4 29/32 in.
Travel, deg	50
Chord (25 percent mean wing chord), in.	19.05
Flap-trailing-edge ailerons:	
Span (each)	9 ft 10¼ in.
Chord (10 percent mean wing chord), in.	7
Area (rearward of hinge line, each), sq ft	5.6
Travel	17.5° up, 17.5° down
Balance area (each), sq ft	1.76
Vertical tail:	
Vertical span	5 ft 10⅜ in.
Area, sq ft	19.2
Weight as flown for tests, lb	5800

Views of the airplane are given as figures 1 and 2, and a sketch showing the plan view of the flap and lateral-control arrangement on the wing is given as figure 3.

Positions of the full-span slotted flap with respect to the wing at various flap deflections are shown in figure 4. A cross section of the flap-trailing-edge ailerons, which were internally balanced, is shown in figure 5. The relations between control-stick position and deflections of the flap-trailing-edge ailerons are given in figure 6.

For the present tests, the lateral-control system was arranged to permit full operation of the flap-trailing-edge ailerons at all flap deflections. The slot-lip ailerons were locked in their neutral positions for all tests.

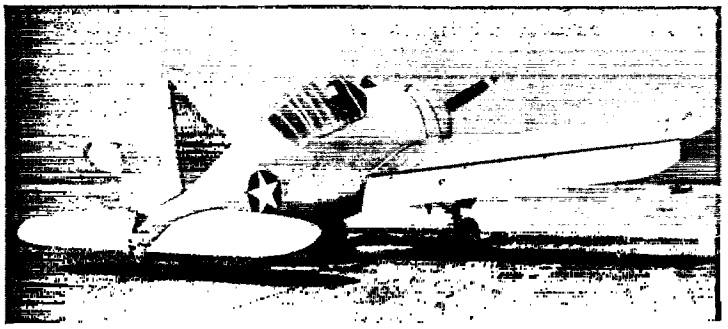

FIGURE 1.—Three-quarter rear view of F2A-2 airplane with full-span slotted flap deflected. Flap deflection, 50°.

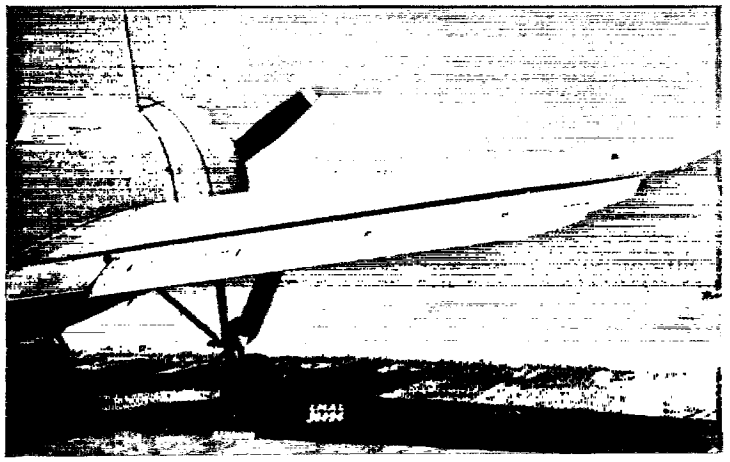

FIGURE 2.—Three-quarter rear view of right wing of F2A-2 airplane with full-span slotted flap. Flap deflection, 10°; flap-trailing-edge aileron deflected downward.

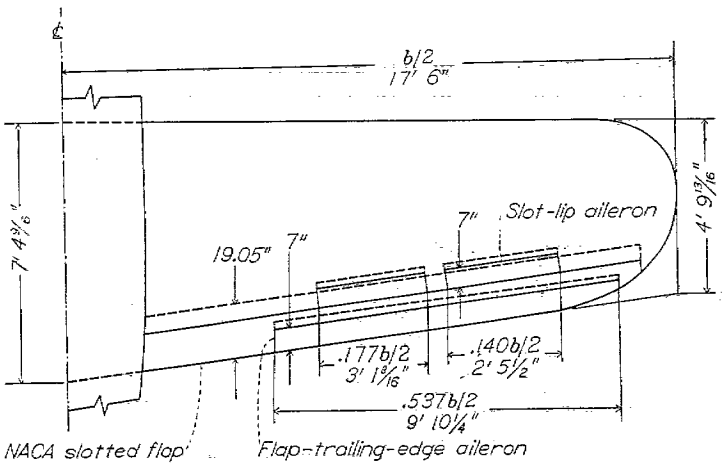

FIGURE 3.—Plan form of F2A-2 wing with full-span slotted flap, flap-trailing-edge aileron, and slot-lip aileron.

INSTRUMENT INSTALLATION

The following NACA photographically recording instruments were installed in the airplane:

Item measured	*NACA instrument*
Time	½-second chronometric timer
Airspeed	Airspeed recorder
Position of control stick and rudder pedals.	Three-element control-position recorder
Position of right aileron	Electrical control-position recorder
Rolling velocity	Angular-velocity recorder
Yawing velocity	Angular-velocity recorder
Angle of yaw	Recording yaw vane

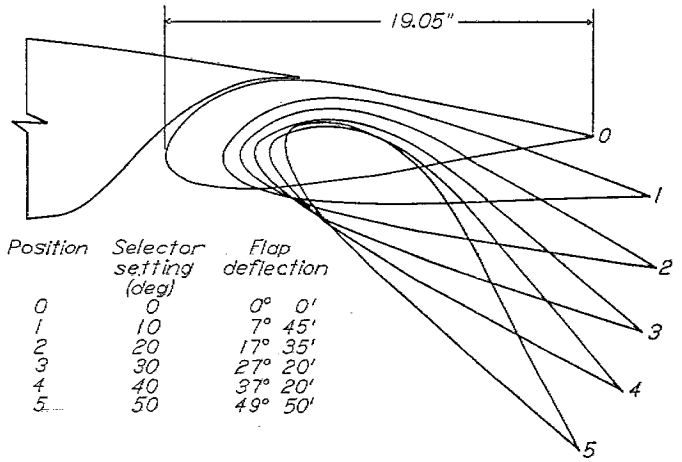

FIGURE 4.—Positions of full-span slotted flap for various angular displacements with no load on flap, as measured at spanwise station 32 percent of semispan from center line. F2A-2 airplane.

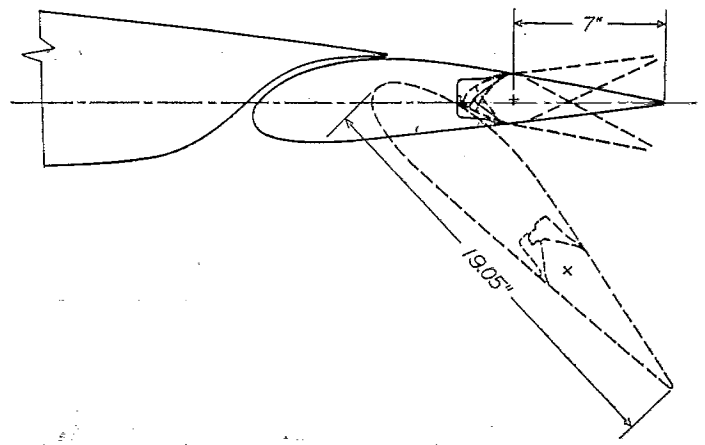

FIGURE 5.—Section view of F2A-2 wing showing flap-trailing-edge aileron and slotted flap.

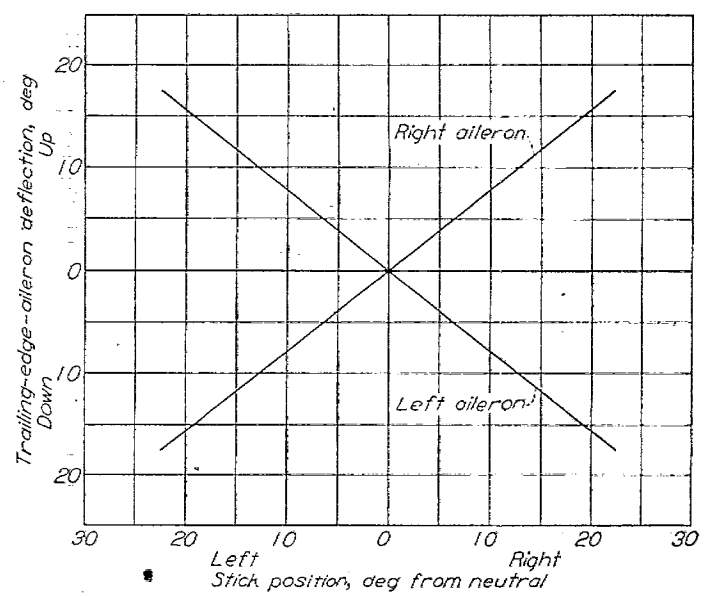

FIGURE 6.—Relation between flap-trailing-edge-aileron deflection and stick position with no load on system at all flap deflections. Stick length, 19.0 inches. F2A-2 airplane.

All the recording instruments were synchronized by the timer. The airspeed recorder was connected to a swiveling static head, free to rotate in both pitch and yaw, and to a shielded total-pressure tube, both of which were mounted on a boom extending 1 chord ahead of the right wing tip. The

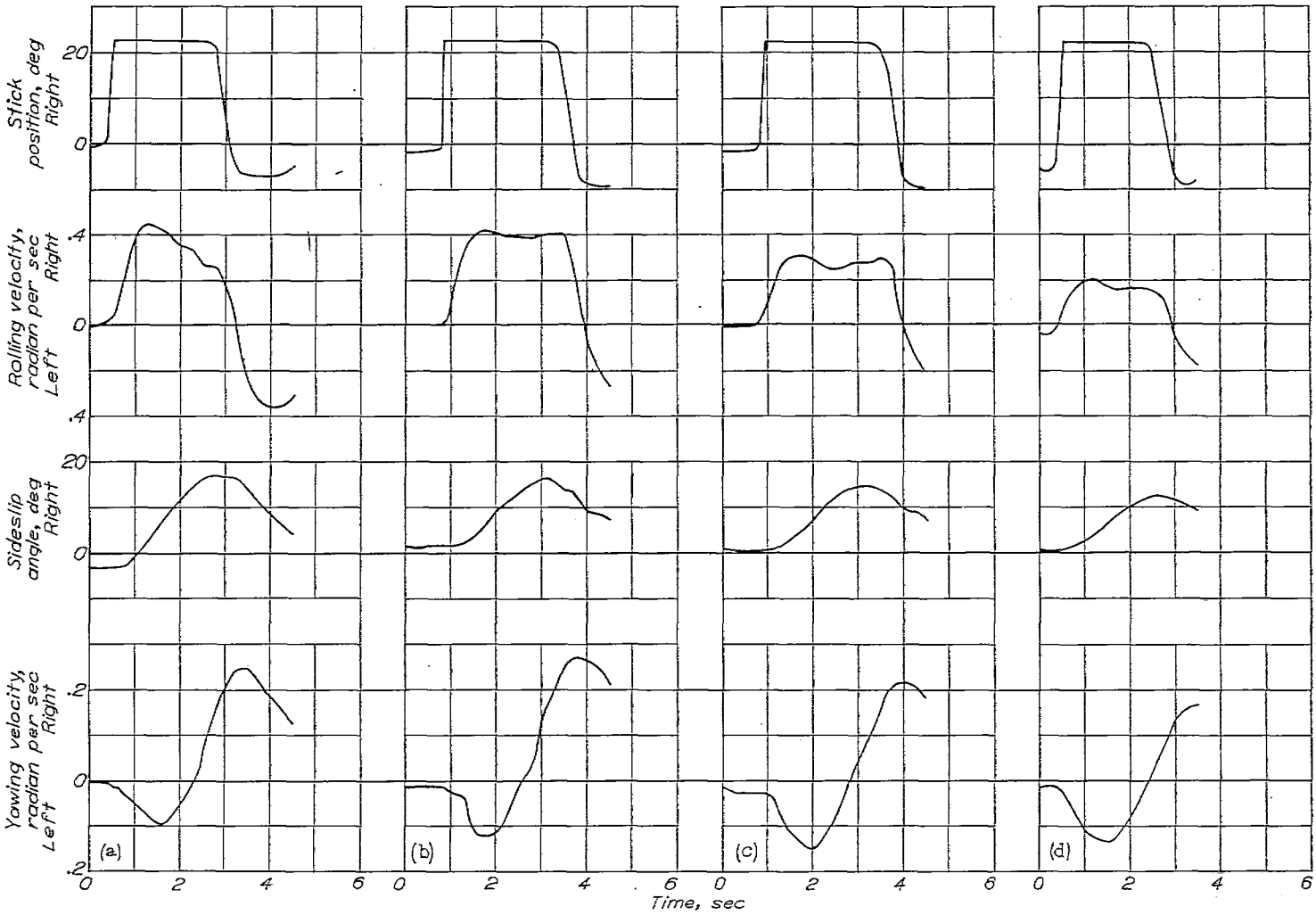

(a) $\delta_f=0°$. (b) $\delta_f=21°$. (c) $\delta_f=32°$. (d) $\delta_f=42°$.

FIGURE 7.—Time histories of airplane motions in abrupt aileron rolls with flap-trailing-edge ailerons at several values of flap deflection δ_f. Approximately full control deflection; calibrated airspeed, 91 miles per hour; level-flight power. F2A-2 airplane.

yaw vane was mounted on a similar boom on the left wing tip. The three-element control-position recorder was situated in the cockpit near the base of the stick. The electrical control-position recorder was mounted on the upper surface of the right wing adjacent to the inboard end of the aileron.

TESTS, RESULTS, AND DISCUSSION

The tests, consisting of abrupt aileron rolls with the rudder held fixed in its trim position, were made in accordance with the procedure outlined in reference 4. Full-control-deflection rolls were made at various airspeeds in the low-speed range for flap deflections of 0°, 21°, 32°, and 42°. Several partial-control-deflection rolls were made at one airspeed for each of the foregoing flap deflections except for 42° flap deflection. The tests were made at altitudes between 7000 and 8000 feet. Typical time histories of these maneuvers are shown in figure 7.

The effectiveness of the flap-trailing-edge ailerons—in terms of the helix angle $pb/2V$—is plotted against right aileron deflection from trim, for the various flap deflections tested, in figure 8 and against calibrated airspeed, for approximately full control deflection, in figure 9. The principal characteristic of the ailerons indicated by these results is the variation in effectiveness with flap deflection. In order to show this variation more directly, the faired data of figure 9 are cross-plotted against flap deflection in figure 10 for a calibrated airspeed of 95 miles per hour; for comparison, data obtained from reference 2 for flap deflections of 0° and 10° are also shown in figure 10. The results of the two investigations show a discrepancy of about 10 percent in the absolute value of $pb/2V$ with flap neutral; this discrepancy suggests that changes may have occurred in the airplane during the year between the two series of tests. Both investigations, however, indicate similar trends in the effect of small flap deflections on aileron effectiveness; the tests of reference 3 show no change in effectiveness for flap deflections up to 10° and the present tests indicate only a small decrease in effectiveness with the flap deflected up to about 20°. For flap deflections greater than about 20°, the aileron effectiveness decreases rapidly, until at 42° flap deflection the effectiveness is only about 45 percent of the effectiveness with flaps up for the airspeed shown. At lower airspeeds, the decrease in the effectiveness is even greater. These results are in general agreement with wind-tunnel results (references 1 and 2).

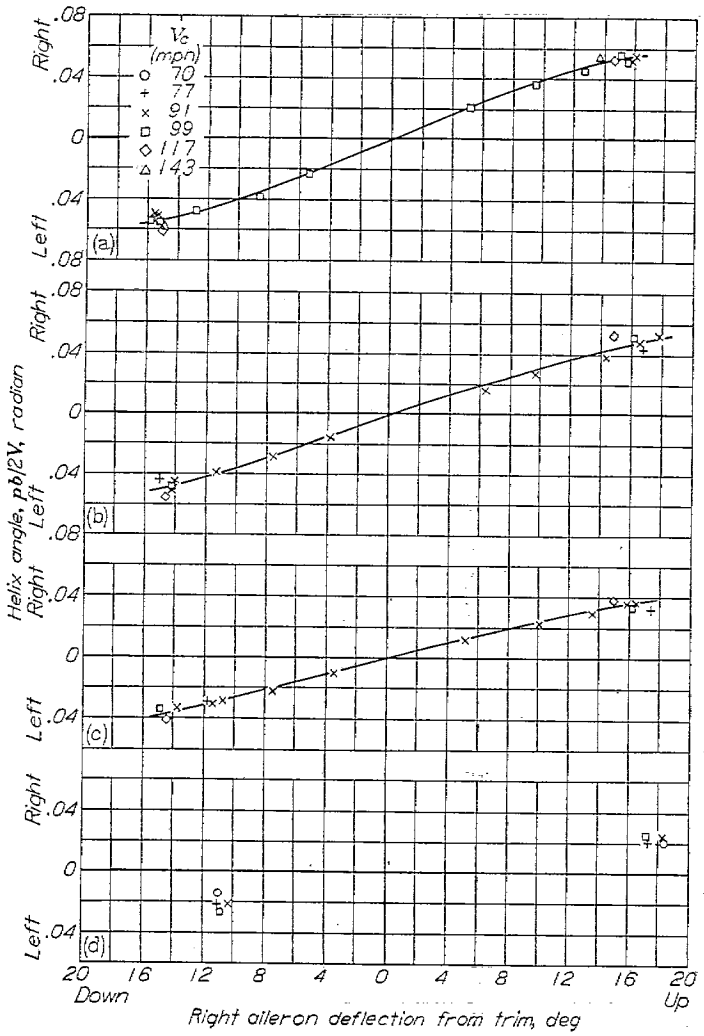

(a) $\delta_f=0°$.
(b) $\delta_f=21°$.
(c) $\delta_f=32°$.
(d) $\delta_f=42°$.

FIGURE 8.—Variation of effectiveness of flap-trailing-edge ailerons with aileron deflection at several values of flap deflection δ_f and several values of calibrated airspeed V_c. Level-flight power. F2A-2 airplane.

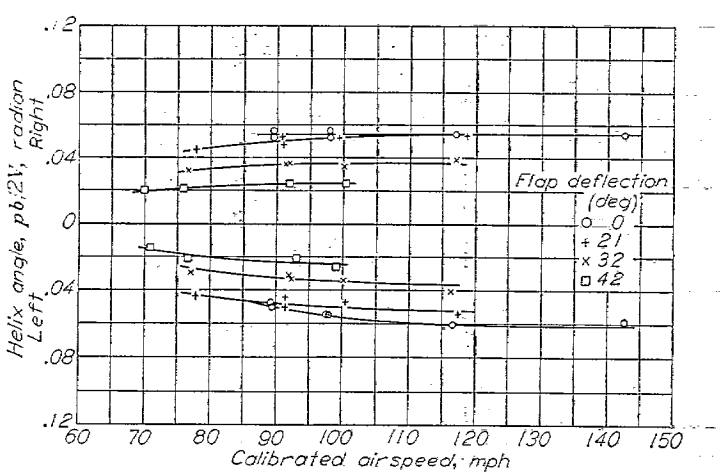

FIGURE 9.—Variation of effectiveness of flap-trailing-edge ailerons with airspeed at various flap deflections. Approximately full control deflection; level-flight power. F2A-2 airplane.

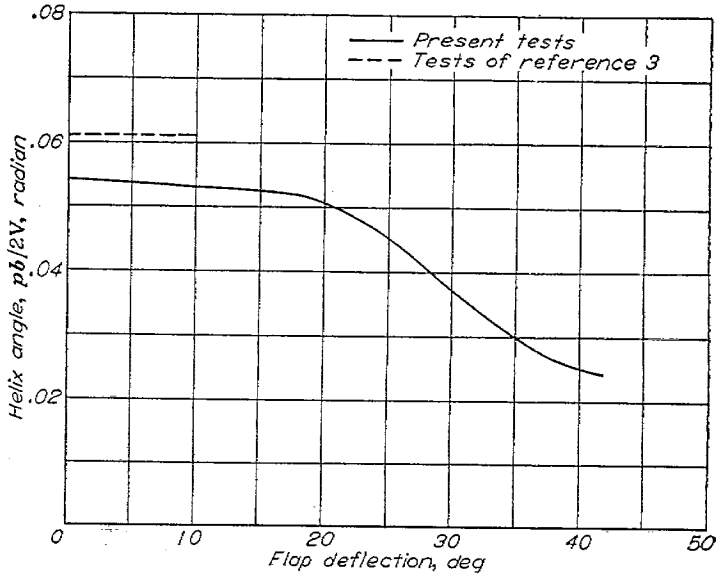

FIGURE 10.—Effectiveness of flap-trailing-edge ailerons at various flap deflections. Average of right and left rolls; calibrated airspeed, 95 miles per hour. Approximately full control deflection; level-flight power. F2A-2 airplane.

Reference 3 points out that although the effectiveness of the flap-trailing-edge ailerons on the F2A-2 airplane was not considered entirely adequate with flaps neutral or deflected 10°, the effectiveness could probably be made satisfactory by a moderate increase in the aileron-deflection range. The results of the present tests indicate that this conclusion is also applicable for flap deflections up to about 20°. For larger flap deflections it is improbable that the ailerons could be made to provide sufficient control by any practical modifications.

As an indication of the yawing motions introduced in the abrupt aileron rolls, the maximum angles of sideslip developed (see fig. 7) are plotted in figure 11 against calibrated airspeed for the flap deflections tested. The direction of roll seems to affect the amount of sideslip during the roll, and the sideslip appears to be, for the most part, less with flaps deflected than with flaps up. For a given rolling effectiveness, however, the angle of sideslip generally increases with flap deflection.

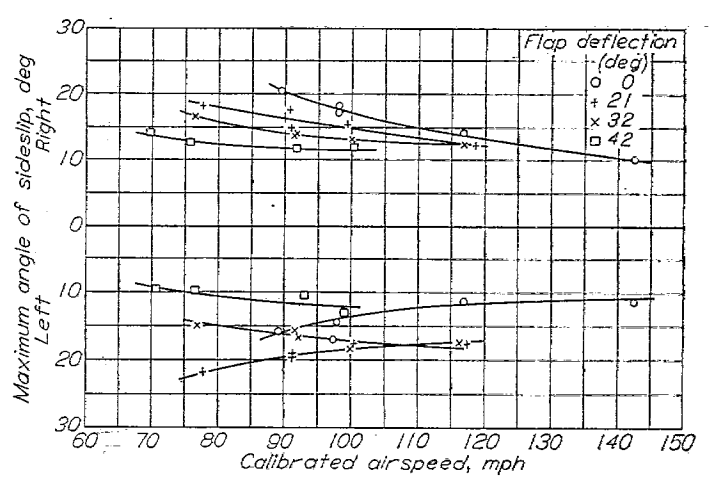

FIGURE 11.—Sideslip angles developed in abrupt aileron rolls with flap-trailing-edge ailerons. Approximately full control deflection; level-flight power. F2A-2 airplane.

The variation of the ratio of maximum adverse yawing velocity to maximum rolling velocity developed in the abrupt aileron rolls with calibrated airspeed at the flap deflections tested is given in figure 12. The variation of this ratio with flap deflection is shown in figure 13 for a calibrated airspeed of 95 miles per hour. These results show that at 95 miles per hour the ratio of maximum adverse yawing velocity to rolling velocity increases from approximately 20 percent with flaps up to about 60 percent with flaps deflected 42°.

The sideslip and yawing characteristics given in figures 11 to 13 are considered of practical importance only for flap deflections up to about 20° because at larger flap deflections the ailerons have so little effectiveness in producing roll that other characteristics are of little significance. For the first 20° of flap deflection, the increase in the angle of sideslip for a given rolling effectiveness and the increase in the adverse yawing velocity were not considered objectionable by the pilot.

CONCLUDING REMARKS

The results of flight tests of partial-span narrow-chord ailerons on the trailing edge of a full-span NACA slotted flap indicated that with flap deflections greater than about 20° the aileron effectiveness decreased rapidly, until at 42° flap deflection the maximum effectiveness obtained at low airspeeds averaged only about 45 percent of the effectiveness with flaps retracted. Deflection of the flaps up to about 20° had little effect on the rolling effectiveness of the ailerons but resulted in some increase in the adverse yawing velocity developed in the abrupt aileron rolls. This increase in the adverse yawing velocity, however, was not considered objectionable by the pilot.

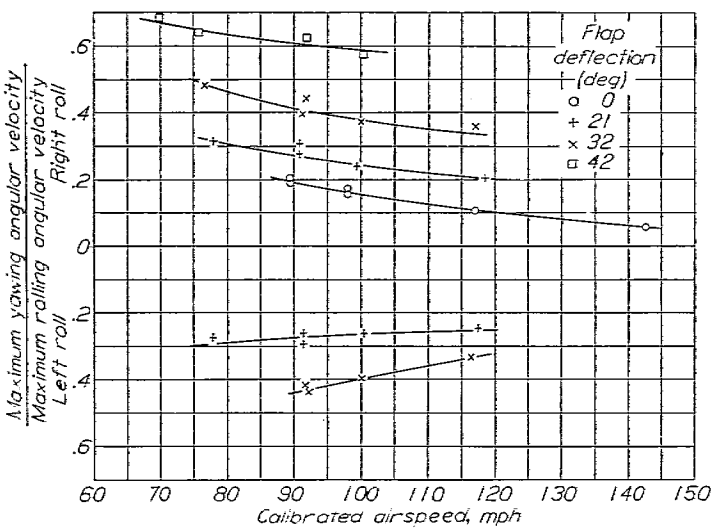

FIGURE 12.—Ratio of maximum adverse yawing velocity to maximum rolling velocity in abrupt aileron rolls with flap-trailing-edge ailerons. Approximately full control deflection; level-flight power. F2A-2 airplane.

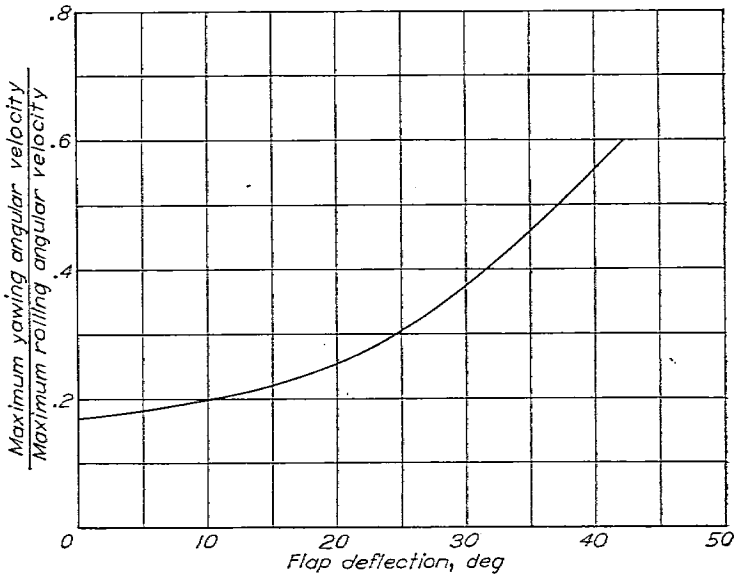

FIGURE 13.—Ratio of maximum adverse yawing velocity to maximum rolling velocity in abrupt aileron rolls with flap-trailing-edge ailerons. Average of right and left rolls; calibrated airspeed, 95 miles per hour; approximately full control deflection; level-flight power. F2A-2 airplane.

LANGLEY MEMORIAL AERONAUTICAL LABORATORY,
NATIONAL ADVISORY COMMITTEE FOR AERONAUTICS,
LANGLEY FIELD, VA., *October 25, 1946.*

REFERENCES

1. Lowry, John G.: Power-Off Wind-Tunnel Tests of the ⅛-Scale Model of the Brewster F2A Airplane. NACA MR, June 21, 1941.
2. Rogallo, Francis M., and Spano, Bartholomew S.: Wind-Tunnel Investigation of a Plain and a Slot-Lip Aileron on a Wing with a Full-Span Slotted Flap. NACA ACR, April 1941.
3. Wetmore, Joseph W., and Sawyer, Richard H.; Flight Tests of F2A-2 Airplane with Full-Span Slotted Flaps and Trailing-Edge and Slot-Lip Ailerons. NACA ARR No. 3L07, 1943.
4. Johnson, Harold I.: NACA Procedure for Flight Tests of Aileron Characteristics of Airplanes. NACA RB No. 3G24, 1943.