CONFIDENTIAL
RESTRICTED
Sub-Library
LANGLEY SUB-LIBRARY
SEP 2 1947
CLASSIFICATION CHANGED
CONFIDENTIAL
By authority of J W Crowley per NACA release form #2145 Date 12/14/53 Ex. ord. 10501 omk 1-13-54
CLASSIFICATION CHANGED
UNCLASSIFIED Inactive
J W Crowley per NACA release form 2070 Date 1-11-55
Authority
omm 1-20-55

NACA

RESEARCH MEMORANDUM

for the

Air Materiel Command, Army Air Forces

FORCE TESTS OF THE BOEING XB-47 FULL-SCALE EMPENNAGE IN THE AMES 40- BY 80-FOOT WIND TUNNEL

By Lynn W. Hunton

Ames Aeronautical Laboratory
Moffett Field, Calif.

CONTAINS PROPRIETARY INFORMATION

CLASSIFIED DOCUMENT

This document contains classified information affecting the National Defense of the United States within the meaning of the Espionage Act, USC 50:31 and 32. Its transmission or the revelation of its contents in any manner to an unauthorized person is prohibited by law. Information so classified may be imparted only to persons in the military and naval Services of the United States, appropriate civilian officers and employees of the Federal Government who have a legitimate interest therein, and to United States citizens of known loyalty and discretion who of necessity must be informed thereof.

TECHNICAL EDITING WAIVED

NATIONAL ADVISORY COMMITTEE FOR AERONAUTICS

WASHINGTON
Aug. 14, 1947

RESTRICTED
CONFIDENTIAL

N A C A LIBRARY
LANGLEY MEMORIAL AERONAUTICAL LABORATORY
Langley Field, Va.

CONFIDENTIAL

NASA Technical Library
3 1176 01434 4353

NATIONAL ADVISORY COMMITTEE FOR AERONAUTICS

RESEARCH MEMORANDUM

for the

Air Materiel Command, Army Air Forces

FORCE TESTS OF THE BOEING XB-47 FULL-SCALE EMPENNAGE IN THE AMES 40- BY 80-FOOT WIND TUNNEL

By Lynn W. Hunton

SUMMARY

A wind-tunnel investigation of the Boeing XB-47 full-scale empennage was conducted to provide, prior to flight tests, data required on the effectiveness of the elevator and rudder. The XB-47 airplane is a jet-propelled medium bomber having wing and tail surfaces swept back 35°. The investigation included tests of the effectiveness of the elevator with normal straight sides, with a bulged trailing edge, and with a modified hinge-line gap and tests of the effectiveness of the rudder with a normal straight-sided tab and with a bulged tab.

INTRODUCTION

The Boeing XB-47 airplane is a jet-propelled medium bomber with swept-back wings and tail surfaces. In view of the lack of available flight data on swept control surfaces, the Air Materiel Command requested that tests of the effectiveness of the elevator and rudder be conducted in the Ames 40- by 80-foot wind tunnel prior to the initial flight test of the first experimental bomber. For the investigation the contractor supplied a special model of the tail assembly incorporating the actual tail surfaces from the existing experimental XB-47 airplane.

The results presented herein include the effectiveness of the elevator for a range of attitudes of the horizontal

RESTRICTED

CONFIDENTIAL

stabilizer and the effectiveness of the rudder at various angles of sideslip.

SYMBOLS

The symbols used in this report are defined as follows:

C_L lift coefficient $\left(\frac{\text{lift}}{qS_H}\right)$

C_Y side-force coefficient $\left(\frac{\text{side force}}{qS_V}\right)$

S_H horizontal-tail area (268 sq ft)

S_V vertical-tail area (219.7 sq ft)

q free-stream dynamic pressure, pounds per square foot

α_u geometric angle of attack of the fuselage reference line relative to tunnel center line, degrees

α true angle of attack of the fuselage reference line relative to air stream, degrees

β angle of sideslip, degrees

δ_e elevator deflection, degrees

δ_r rudder deflection, degrees

δ_t tab deflection, degrees

MODEL

Presented in figure 1 is a three-view drawing of the model. The body, which was of a reinforced steel shell construction, was designed and built by the contractor to simulate the tail cone of the XB-47 airplane. On this body were mounted the actual horizontal and vertical tail surfaces from the first experimental XB-47 airplane. The installation of the model in the tunnel test section is shown in figure 2. Due to the height of the vertical tail, the model had to be mounted

approximately 7 feet below the center line of the air stream in order to obtain the desired angle-of-attack range. Such a deviation from a normal test installation required a special set of support struts as shown in figure 2. Since the drag forces in this investigation were of little importance, no attempt was made to shield these special struts with fairings.

The elevator and rudder were both constant-percent chord (0.3c) with an internal balance panel linkage as shown in figure 3. Both the horizontal and vertical surfaces employed an NACA 65010 airfoil section (measured parallel to wind axis) with cusps removed. The control-surface movement and position indication were effected by electric actuators and selsyns which were installed in the control system. Deflections of the right elevator tab (left tab locked in neutral for all tests) were obtained by locking the tab in various fixed positions. The rudder tab, however, was controllable remotely with an actuator. The modifications tested included a bulged trailing edge and a reduced hinge-line gap on the elevator and a bulged tab on the rudder. Details of these modifications are given with the test results.

TESTS AND RESULTS

The force tests were run at a dynamic pressure of 30 pounds per square foot which corresponds to an airspeed of about 110 miles per hour at standard sea-level conditions (Reynolds numbers of approximately 8×10^6 and 12×10^6 for the horizontal and vertical surfaces, respectively, based on the mean chord). The investigation consisted of two parts: (a) effectiveness tests of the elevator with several different modifications; and (b) effectiveness tests of the rudder at 4 angles of sideslip (-0.3°, -3.4°, -6.3°, and -9.8°) with both a plain and a bulged tab. All force data are presented with reference to the wind axes. A sketch showing the positive directions of the forces is given in figure 4. All data presented as a function of angle of attack α have been corrected for stream angle inclination (0.04° up-flow) and for the influence of the jet boundary as follows:

$$\alpha_T = \delta_W \frac{S_H}{C} C_L \, 57.3$$

where

δ_w boundary-correction factor (0.11)

S_H horizontal-tail area (268 sq ft)

C cross sectional area of tunnel (2856 sq ft)

All other data obtained at various fixed attitudes of the tail surfaces (horizontal and vertical) are presented herein at the particular geometric angle of attack α_u with no correction for the aforementioned effects. Although the vertical surface tip was rather close to the tunnel wall, no boundary correction has been applied to the measured angle of sideslip β, since no reliable wall correction was available for such an unusual tunnel-model configuration.

Results of the tests of the horizontal tail are presented in figures 5 to 8. Shown in figure 5 for the basic horizontal surface are the lift characteristics as a function, first, of angle of attack for several fixed elevator deflections, and second, of elevator deflection for several fixed angles of attack. It should be noted on this figure that the data for the lift characteristics in pitch of the surface when compared with the other data at equivalent test conditions show a discrepancy amounting to approximately 1.5° of elevator deflection. All data have been thoroughly checked and no explanation can be found. The data of figure 6 show the effect of fixed deflections of the right elevator tab on the effectiveness of the basic elevator. The effectiveness of the elevator with a bulged trailing edge, which extended over approximately 40 percent of the elevator span, is shown in figure 7. Also included in this figure is a sketch showing the location and cross section of the trailing-edge bulge. In figure 8 elevator effectiveness data are shown which were obtained with a modified gap at the elevator hinge line. For this modification, details of which are shown in figure 8, the shroud over the entire span was extended thus reducing the gap opening by as much as 40 percent at some points.

The results of the investigation of the effectiveness of the rudder are presented in figures 9(a) to 9(d) for angles of sideslip of -0.3°, -3.4°, -6.3°, and -9.8°, respectively. At each angle of sideslip, effectiveness data with the rudder tab in several fixed positions were obtained for the basic rudder

surface (straight-sided tab) and for the rudder with a bulged tab. A sketch showing a cross-sectional comparison of the straight-sided and the bulged rudder tab is included in figure 9(a). All tests of the rudder were made at an angle of attack of 0°.

Ames Aeronautical Laboratory,
National Advisory Committee for Aeronautics,
Moffett Field, Calif.

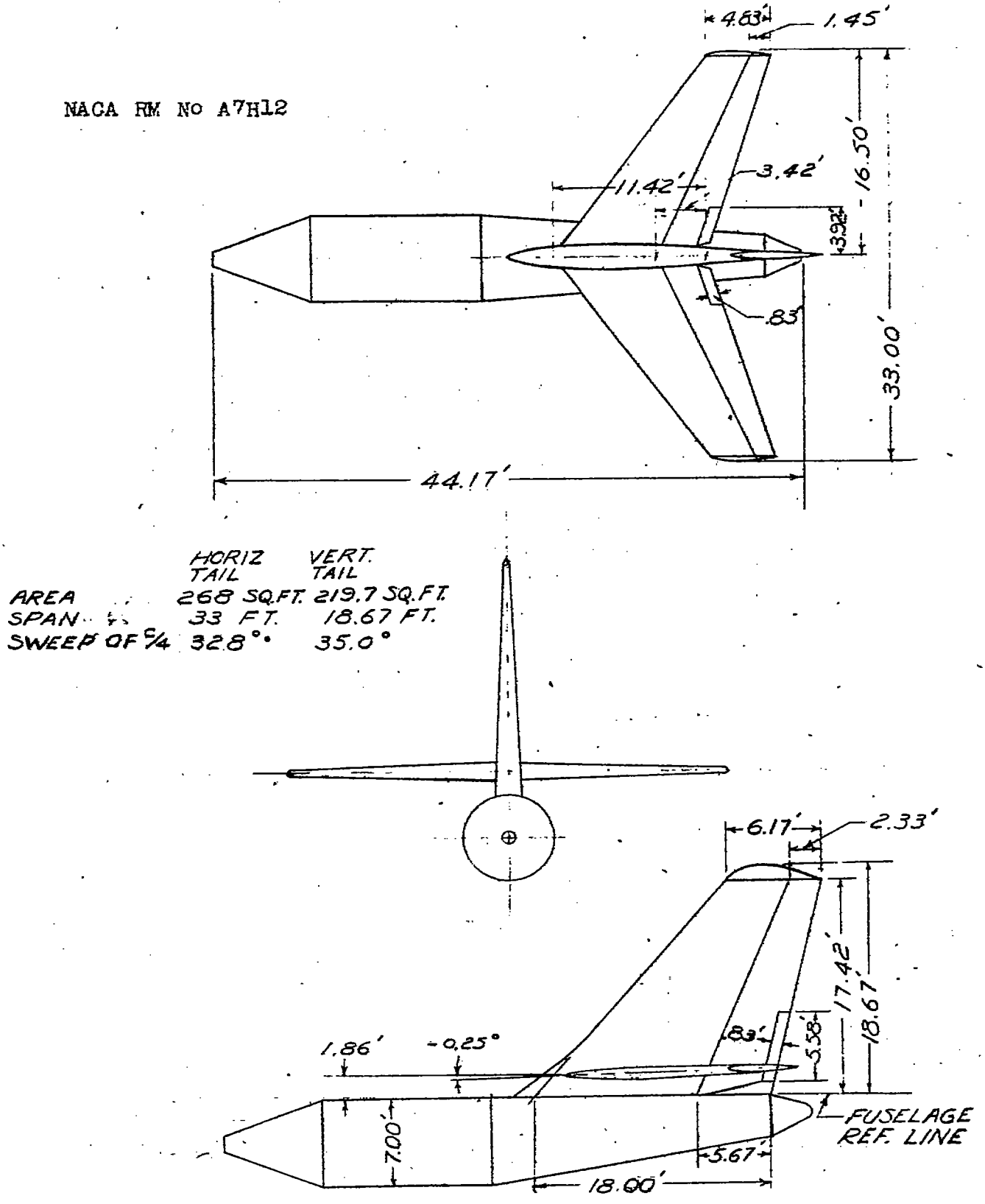

FIGURE 1.– THREE-VIEW DRAWING OF THE BOEING XB-47 EMPENNAGE MODEL.

[redacted]

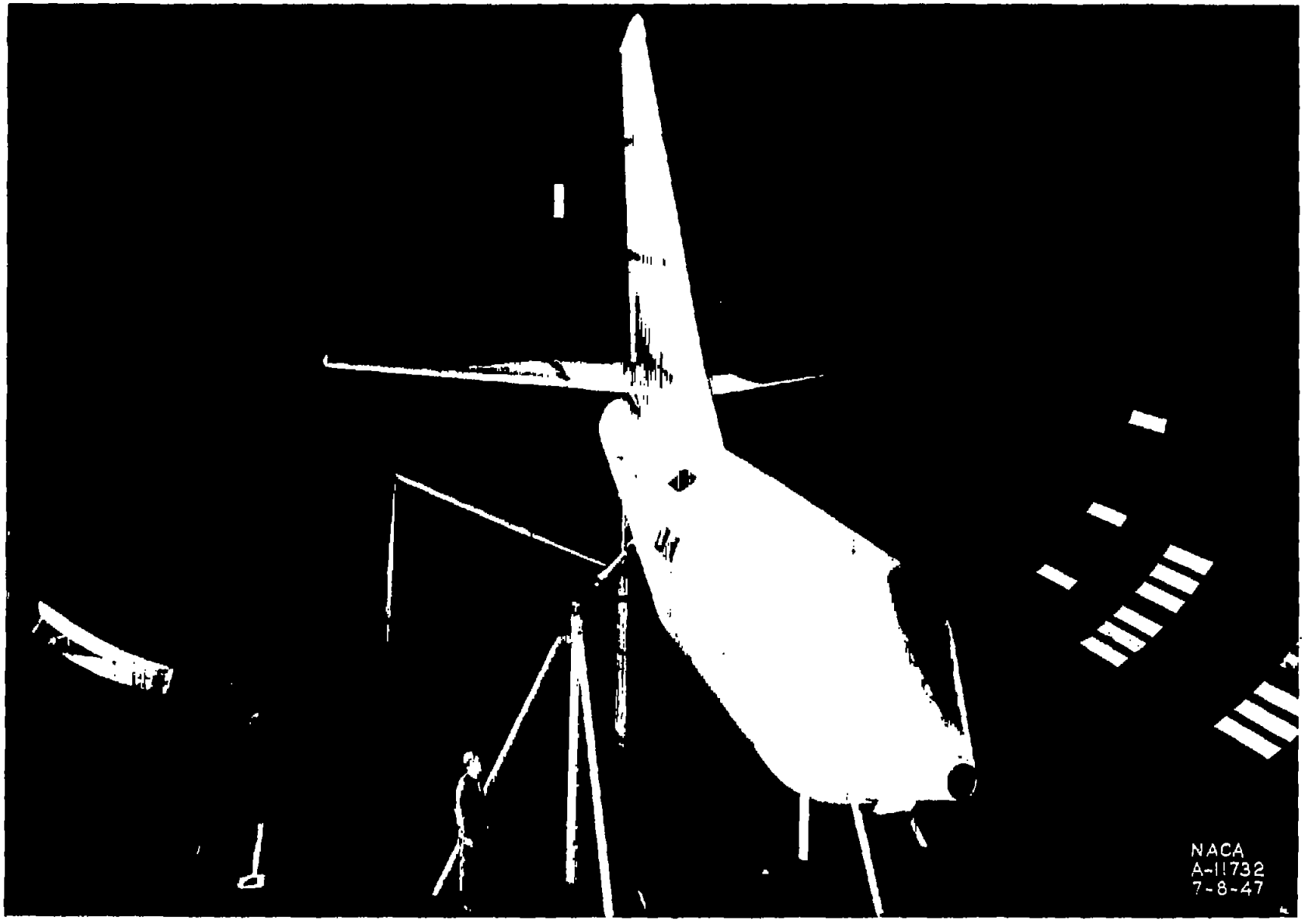

(a) Three-quarter front view.

Figure 2.- Views of the Boeing XB-47 empennage model in [redacted] the Ames 40- by 80-foot wind tunnel.

NATIONAL ADVISORY COMMITTEE FOR AERONAUTICS
AMES AERONAUTICAL LABORATORY — MOFFETT FIELD, CALIF.

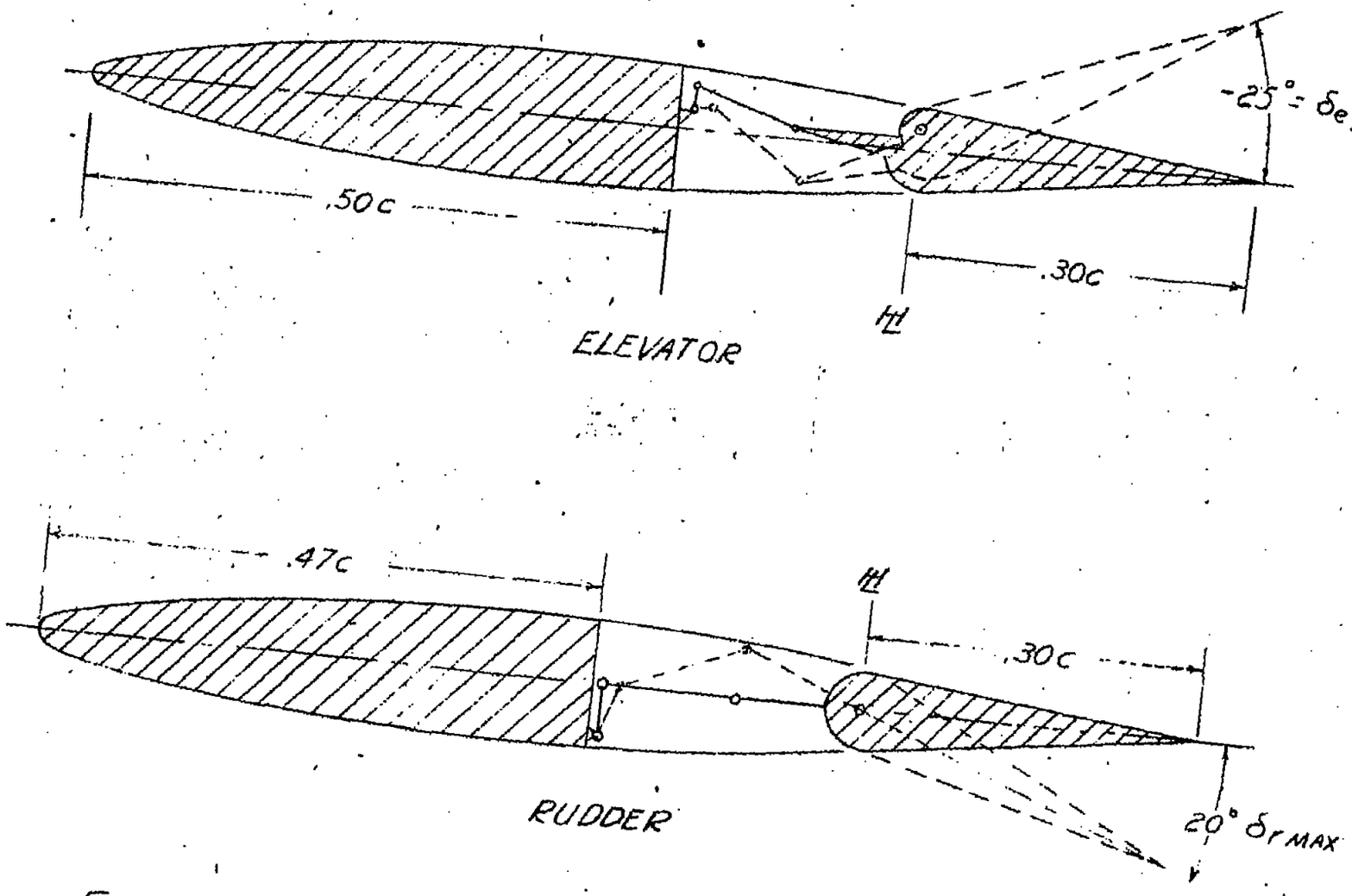

FIGURE 3.– ELEVATOR AND RUDDER BALANCE PANEL LINKAGES

[redacted]

NATIONAL ADVISORY COMMITTEE FOR AERONAUTICS

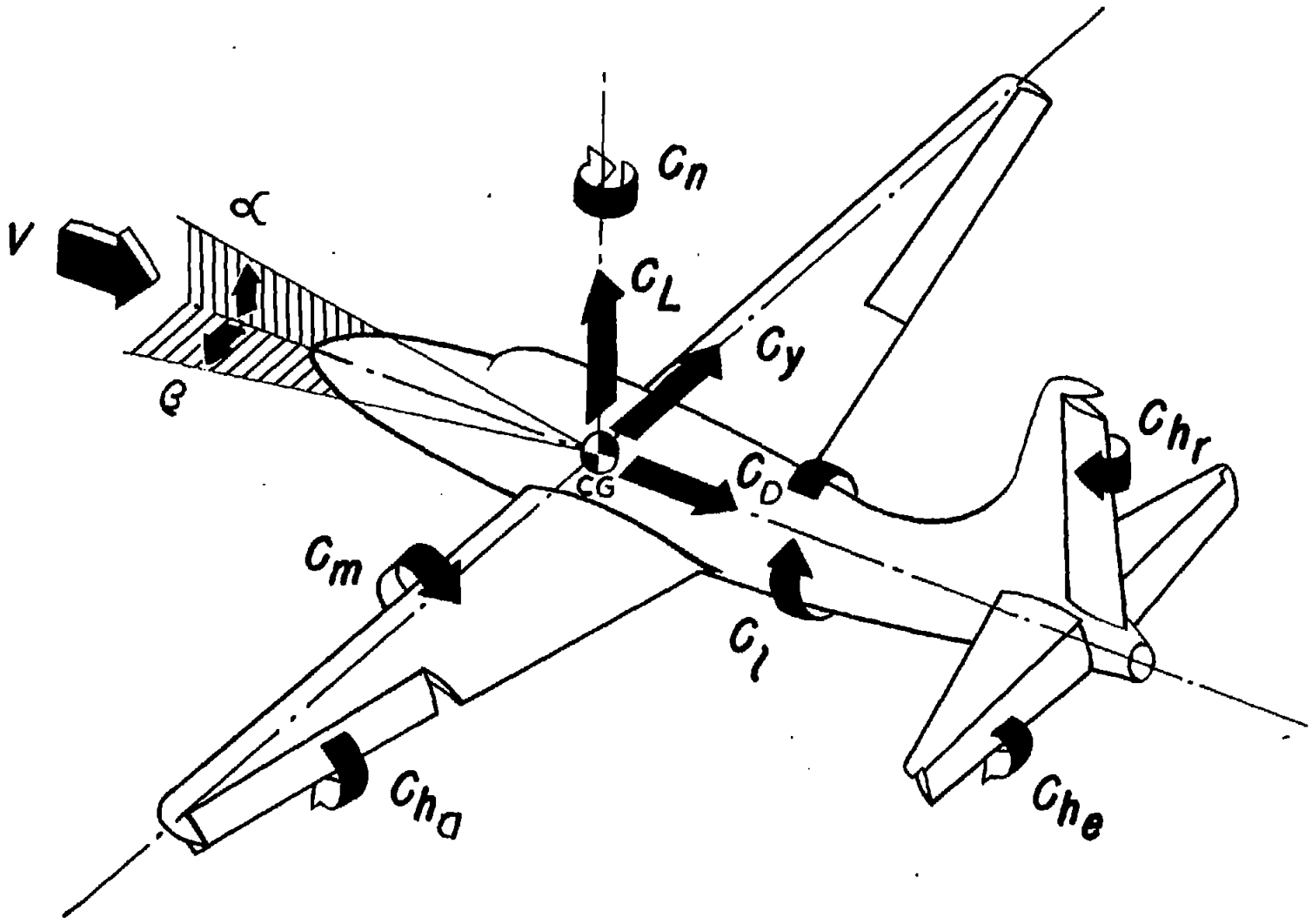

[redacted]

National Advisory Committee for Aeronautics

FIGURE 4.- SIGN CONVENTION FOR THE STANDARD NACA COEFFICIENTS. ALL FORCES, MOMENTS, ANGLES, AND CONTROL SURFACE DEFLECTIONS ARE SHOWN AS POSITIVE.

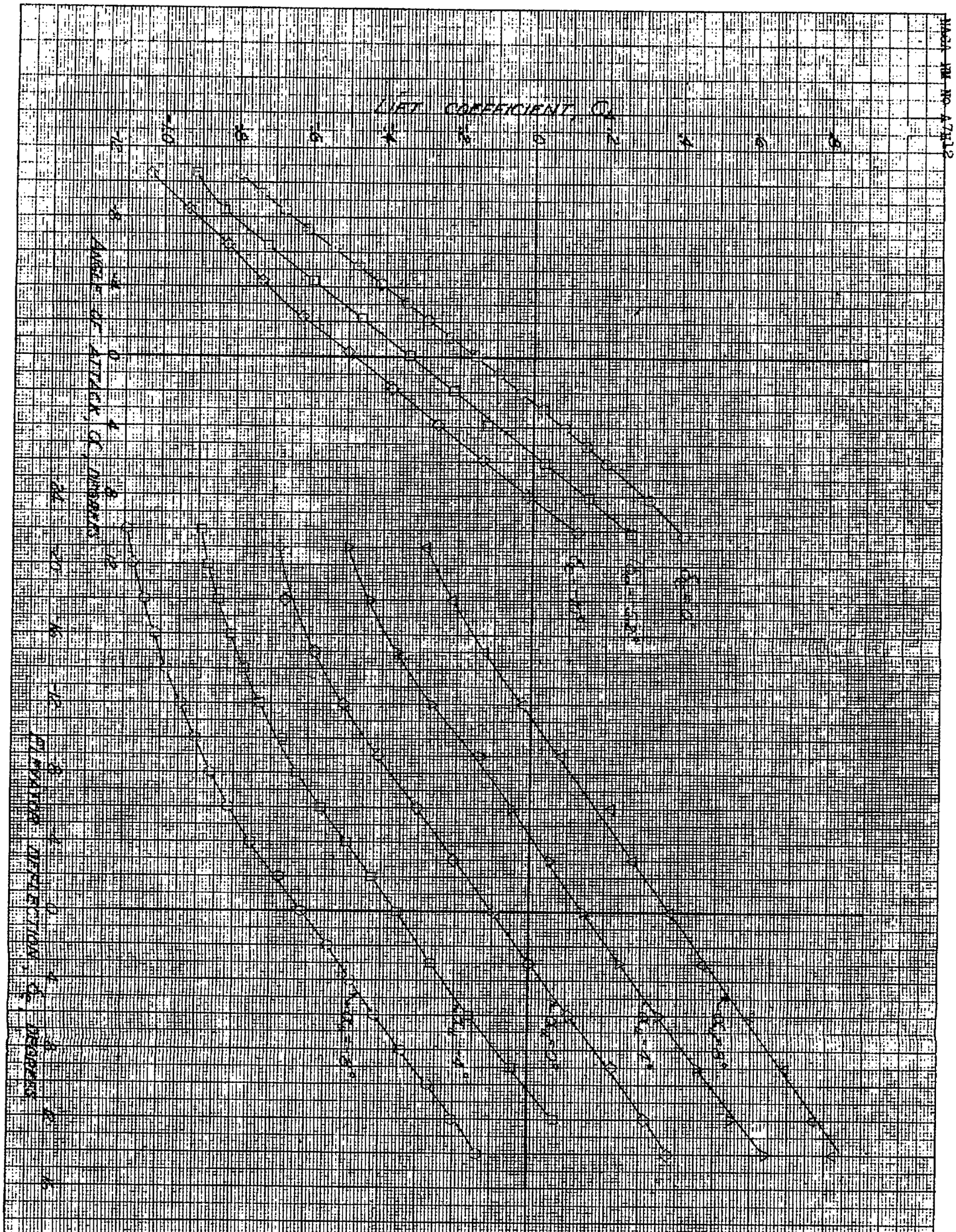

FIGURE 5.- LIFT CHARACTERISTICS OF THE BASIC HORIZONTAL SURFACE IN PITCH AND EFFECTIVENESS OF THE ELEVATOR, β, -0.5°.

[redacted]

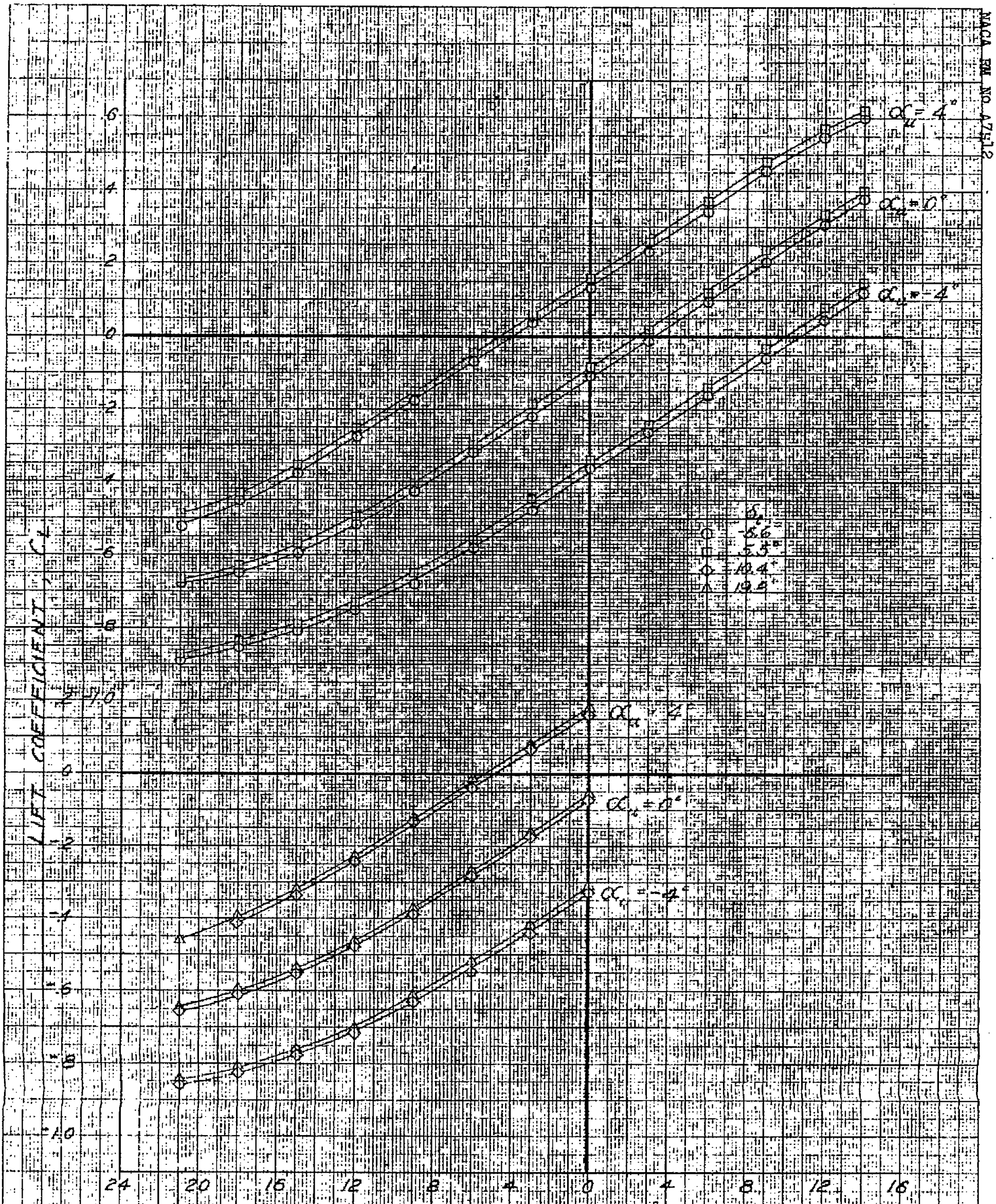

FIGURE 6.- EFFECT OF RIGHT TAB DEFLECTION ON THE EFFECTIVENESS OF THE BASIC ELEVATOR. $\beta = 0.5°$

[redacted]
NATIONAL ADVISORY COMMITTEE FOR AERONAUTICS

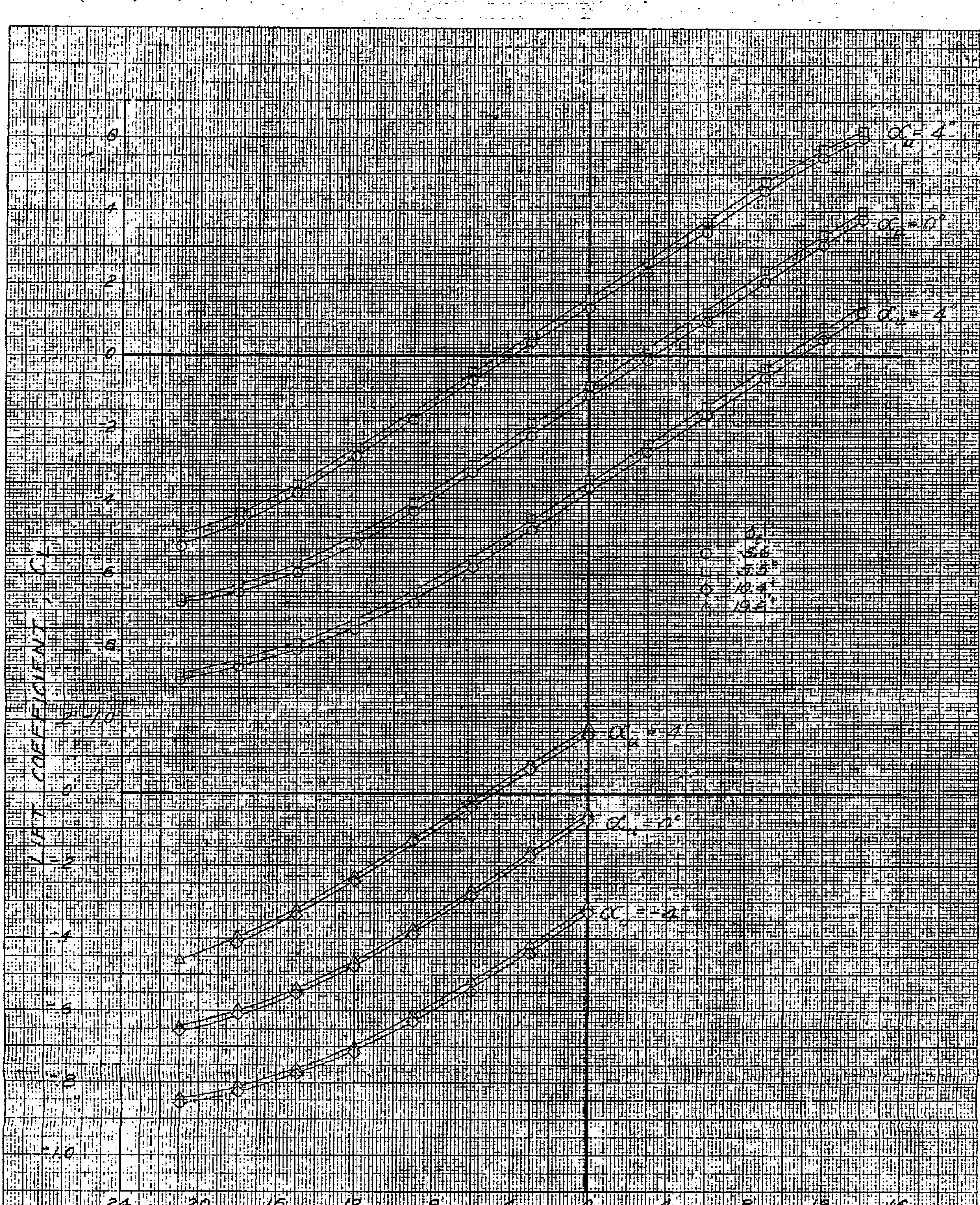

FIGURE 6.- EFFECT OF RIGHT TAB DEFLECTION ON THE EFFECTIVENESS OF THE BASIC ELEVATOR. β, -0.3°.

[redacted]
NATIONAL ADVISORY COMMITTEE FOR AERONAUTICS

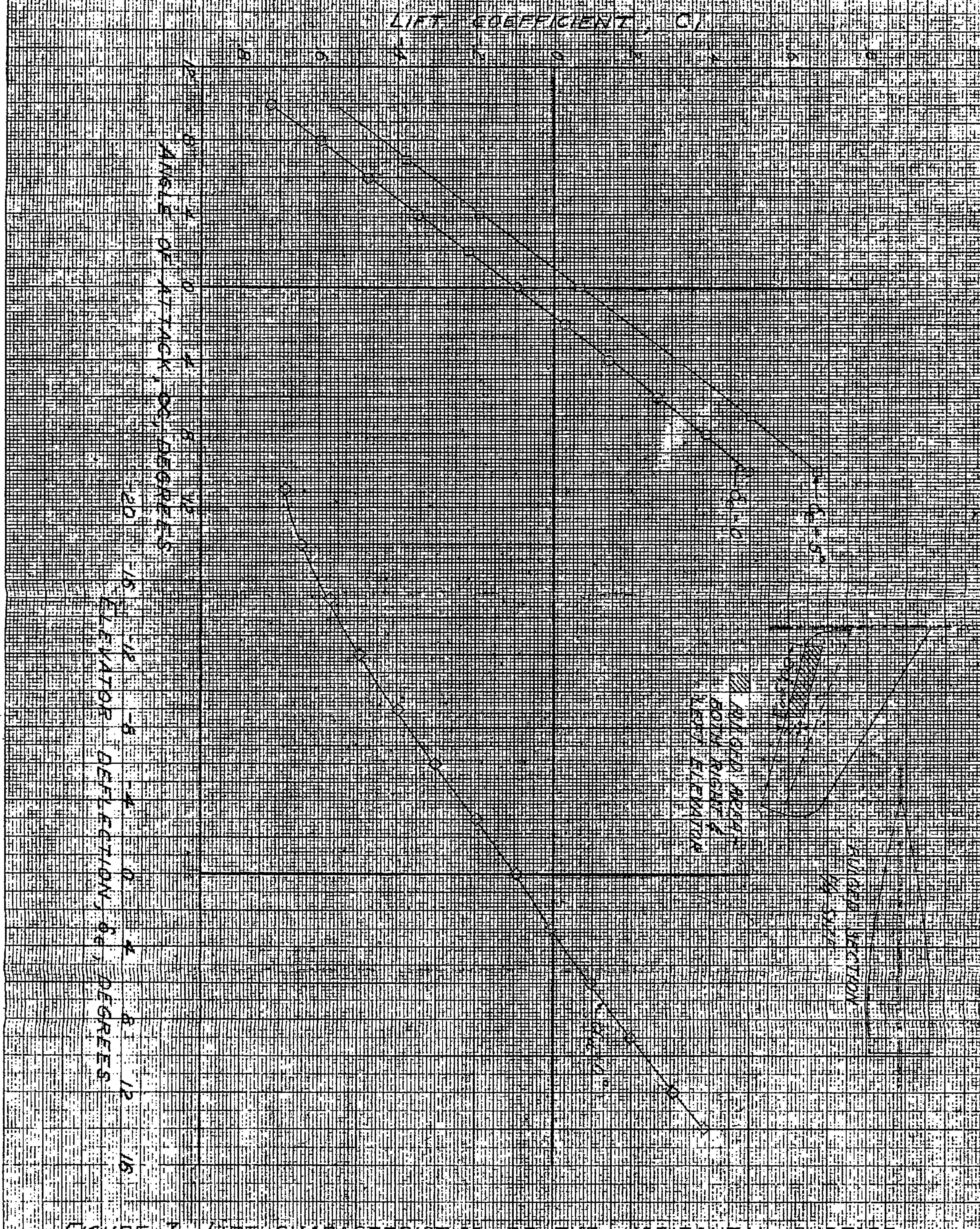

FIGURE 7.- LIFT CHARACTERISTICS OF THE HORIZONTAL SURFACE IN PITCH AND EFFECTIVENESS OF THE ELEVATOR WITH A BULGED TRAILING EDGE. δ_t 0.3°.

[redacted]

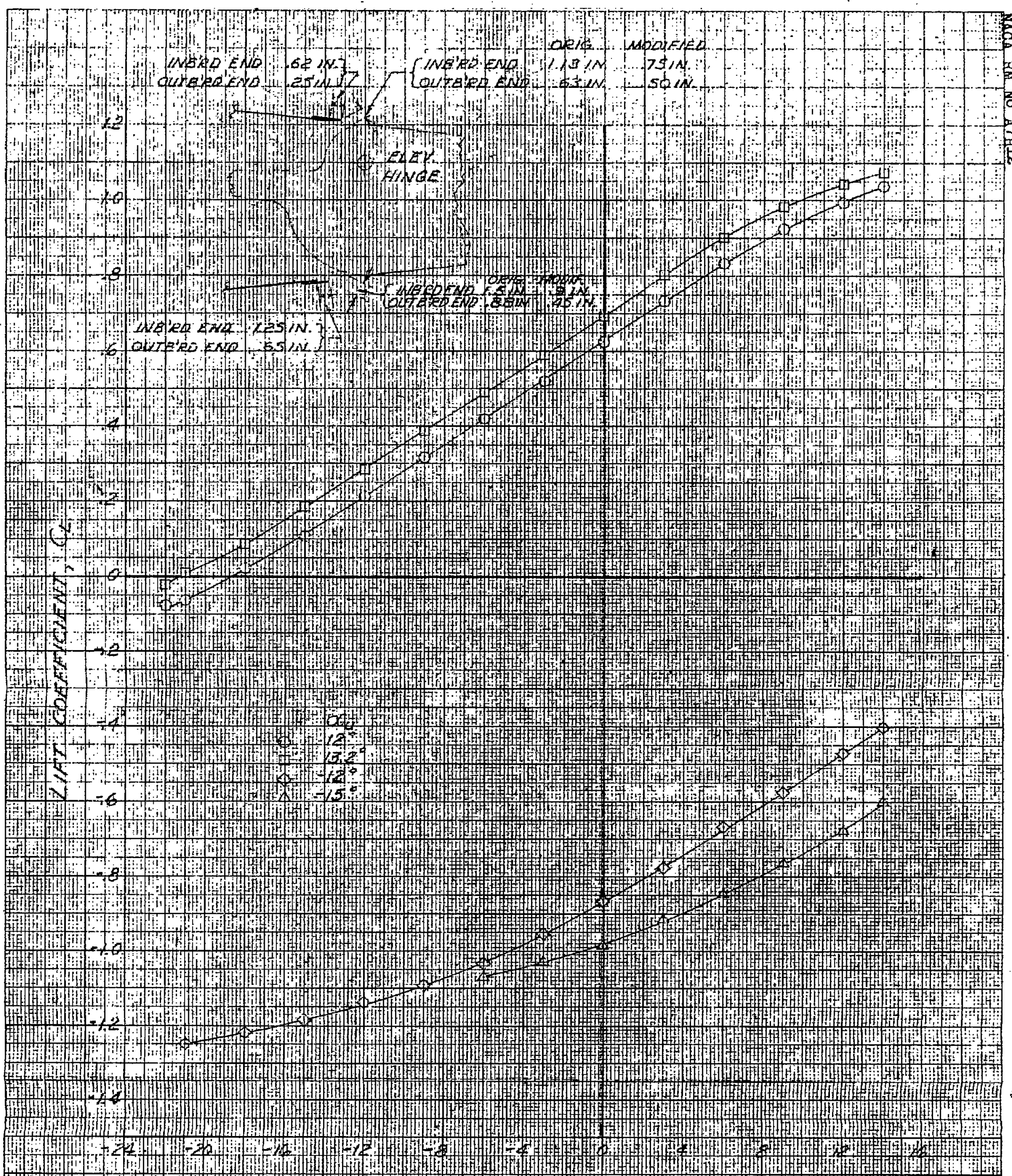

FIGURE 8.- EFFECTIVENESS OF THE ELEVATOR WITH A MODIFIED GAP. $\beta_1 = 0.3°$.

[redacted]

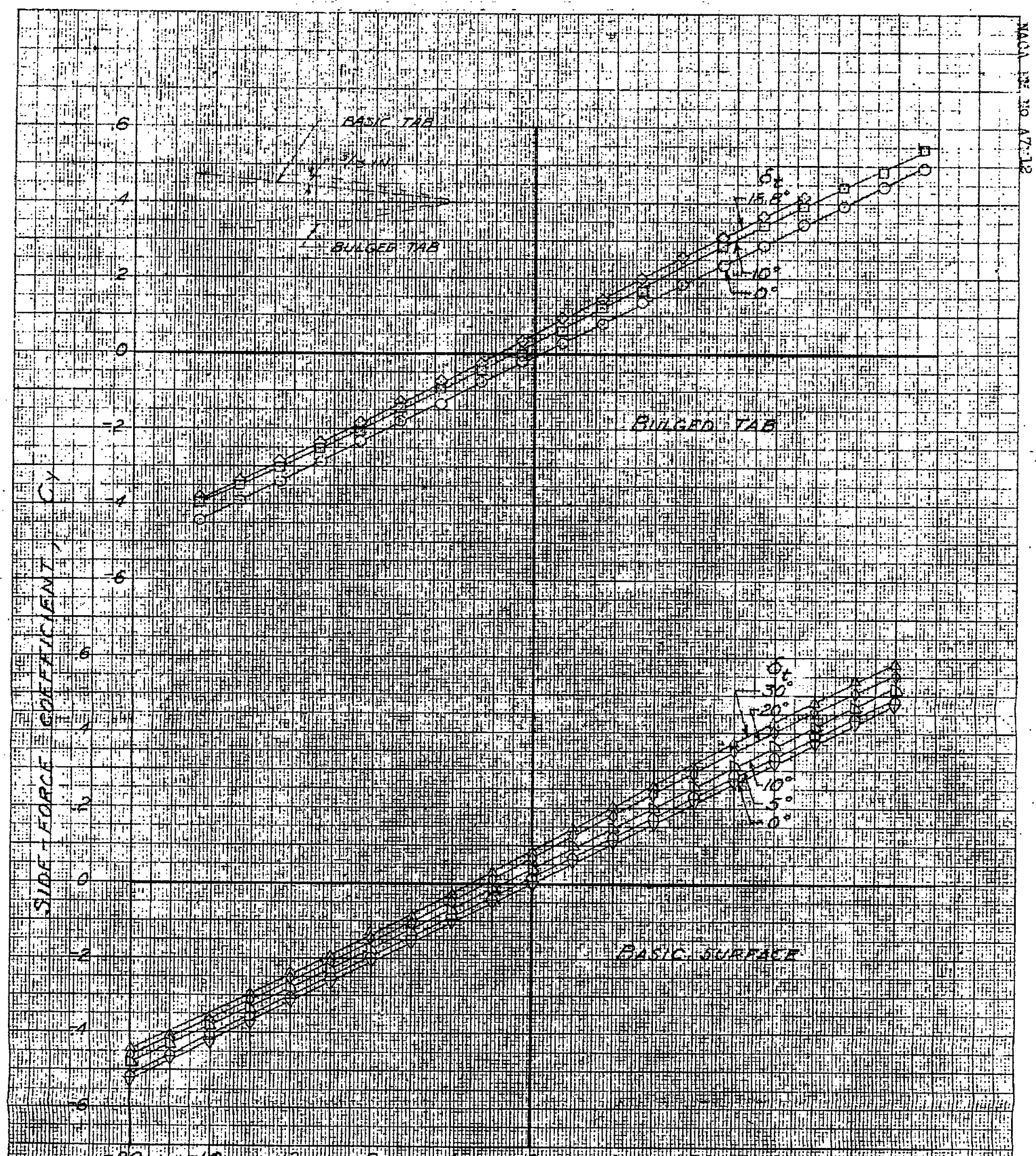

(a) β, -0.3°.

FIGURE 9.- EFFECTIVENESS OF THE RUDDER WITH THE BASIC TAB AND WITH THE BULGED TAB. α_t, 0°.

[redacted]

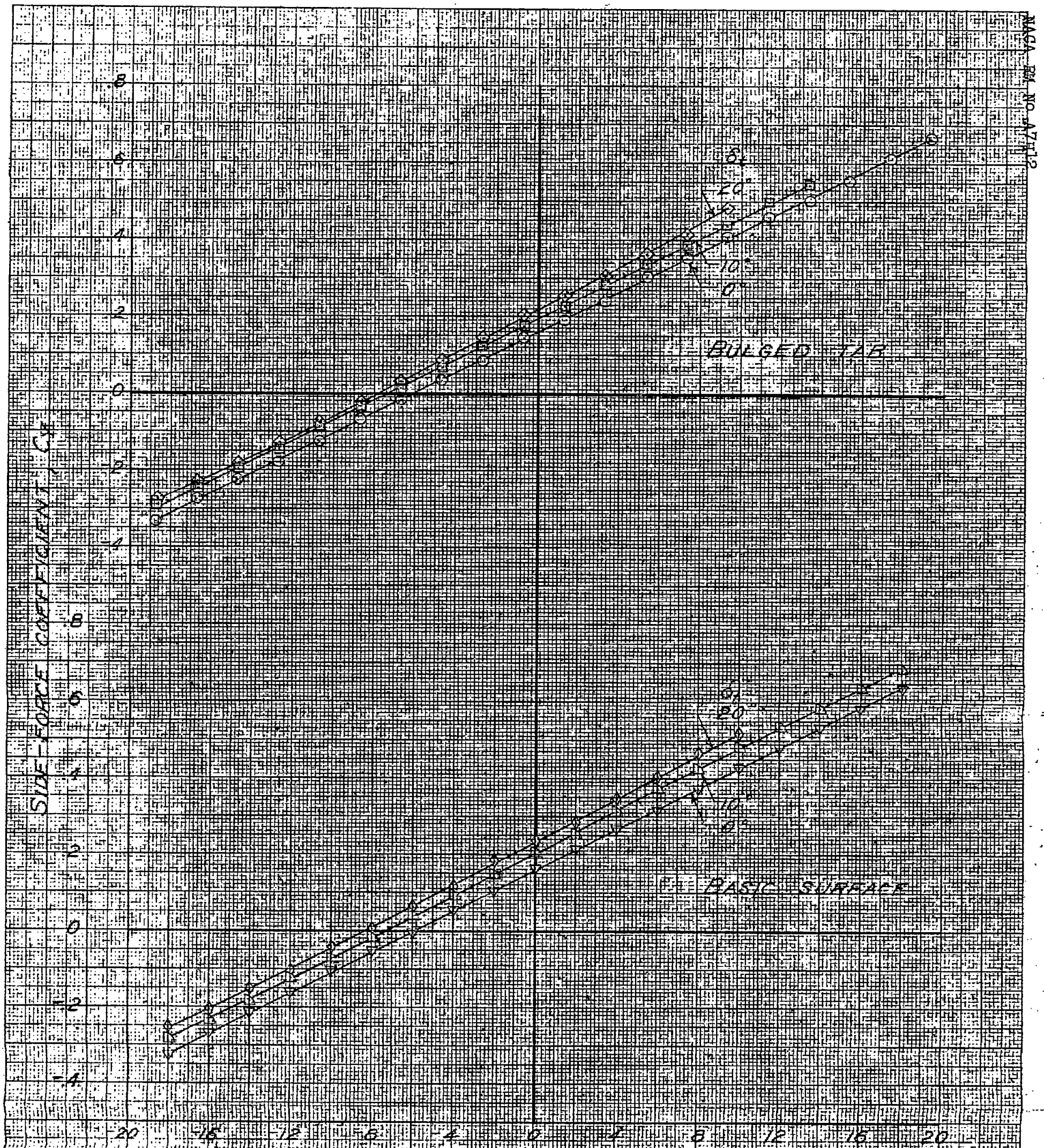

(b) β, -3.4°

FIGURE 9.- CONTINUED.

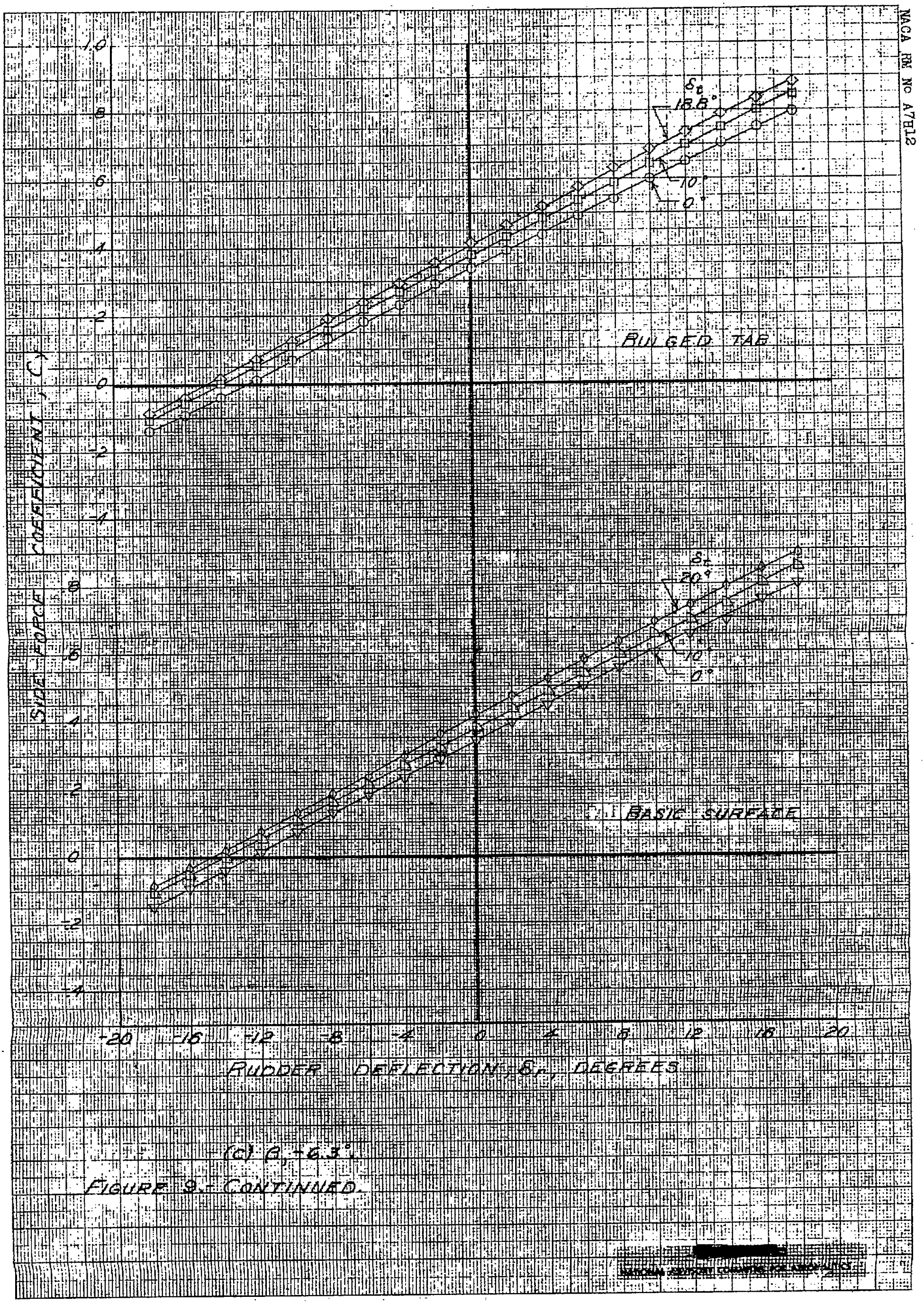

(c) β, -6.3°.

FIGURE 9.- CONTINUED.

[redacted]
LANGLEY AERONAUTICAL LABORATORY

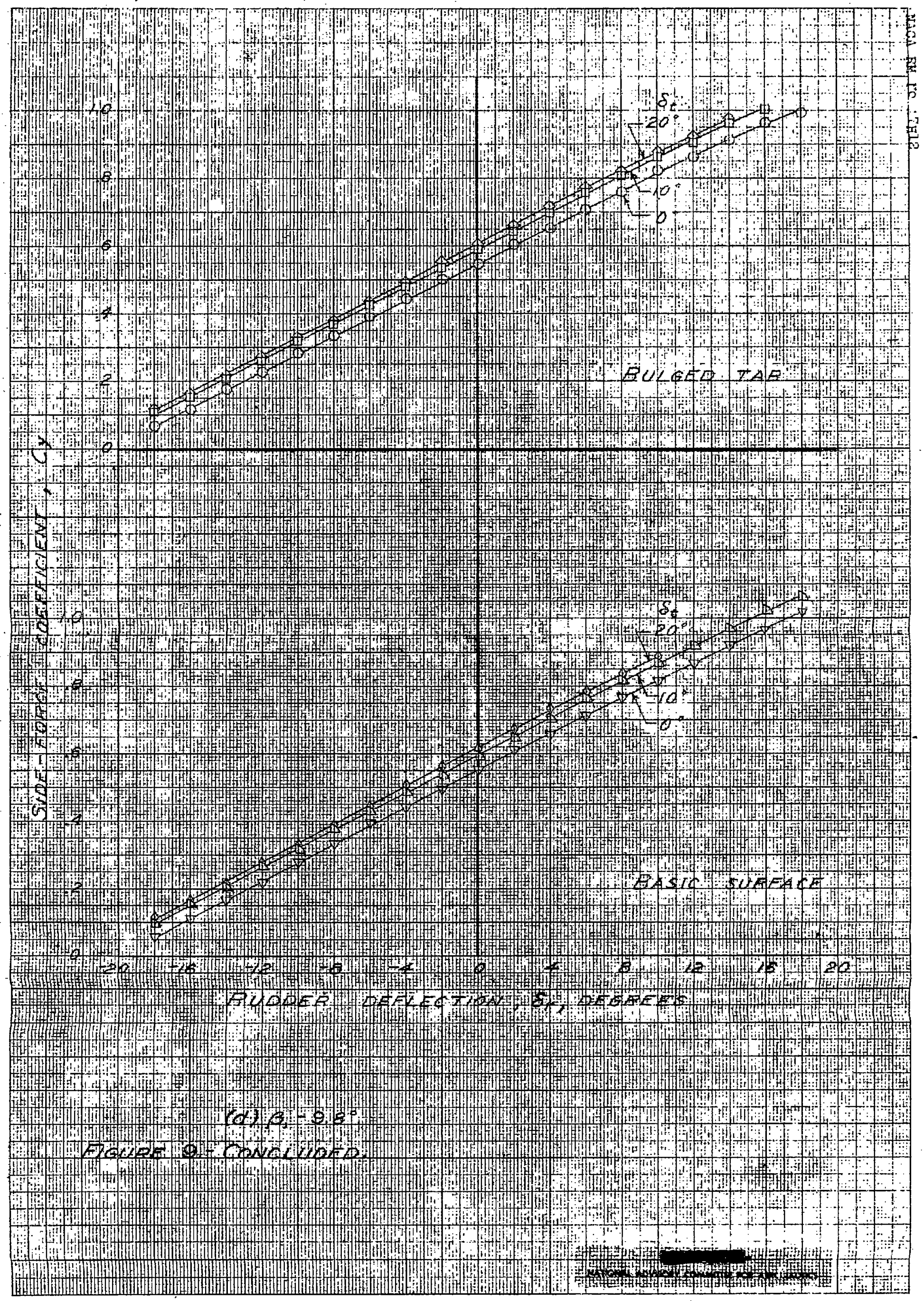

(d) β, -9.8°.

FIGURE 9.- CONCLUDED.

[redacted]

NASA Technical Library
3 1176 01434 4353