RESTRICTED

CLASSIFICATION CANCELLED
naca Release form #647
Authority H. L. Dryden Date July 3, 1951
Dir., Aeron. R
NACA
By HGR
7-13-51

NACA

RESEARCH MEMORANDUM

25 NOV 1947

AN INVESTIGATION OF THE EFFECT OF TIP SHAPE ON THE LOW-SPEED AERODYNAMIC CHARACTERISTICS OF LARGE-SCALE SWEPT WINGS

By Walter C. Walling

Ames Aeronautical Laboratory
Moffett Field, Calif.

CLASSIFIED DOCUMENT

This document contains classified information affecting the National Defense of the United States within the meaning of the Espionage Act, USC 50:31 and 32. Its transmission or the revelation of its contents in any manner to an unauthorized person is prohibited by law. Information so classified may be imparted only to persons in the military and naval services of the United States, appropriate civilian officers and employees of the Federal Government who have a legitimate interest therein, and to United States citizens of known loyalty and discretion who of necessity must be informed thereof.

NATIONAL ADVISORY COMMITTEE FOR AERONAUTICS

WASHINGTON

November 13, 1947

RESTRICTED

N A C A LIBRARY
LANGLEY MEMORIAL AERONAUTICAL
LABORATORY
Langley Field, Va.

NASA Technical Library
3 1176 01434 4361

NATIONAL ADVISORY COMMITTEE FOR AERONAUTICS

RESEARCH MEMORANDUM

AN INVESTIGATION OF THE EFFECT OF TIP SHAPE ON THE LOW-SPEED AERODYNAMIC CHARACTERISTICS OF LARGE-SCALE SWEPT WINGS

By Walter C. Walling

SUMMARY

In an effort to remedy some of the undesirable pitching-moment characteristics of swept wings with relatively high aspect ratios and to improve the maximum lift coefficient obtainable, an investigation has been made of the effect of tip shape on the aerodynamic characteristics of large-scale 45° swept-forward and 45° swept-back wings. Also toward this end, the swept-back wing was tested with bodies of revolution, with and without ducts, mounted on the tips.

The results show that none of the variations of tip shape investigated nor addition of bodies of revolution at the tips produced major changes in the characteristics of the swept wings. Tips cut off oblique to the air stream exhibited slightly better pitching-moment characteristics at high angles of attack for the swept-forward and swept-back wings. Tuft studies indicated that the unstable pitching-moment characteristics of swept-back wings at high angles of attack are caused by a rapid development of leading-edge stall, beginning at the tip and progressing inboard.

INTRODUCTION

In order to capitalize on the high-speed advantages of highly swept wings, it is necessary that several low-speed problems be solved. Two of the more troublesome of these problems are (1) poor pitching-moment characteristics of wings with relatively high aspect ratios involving a sharp increase in stability at moderate angles of attack followed by marked instability at higher angles, and (2) low value of maximum lift.

On the basis of examination of pressure-distribution measurements and tuft observations on swept wings, it was thought that

[redacted]

variation of tip shape from the conventional design (outboard edges nearly parallel to the air stream) might favorably alter these undesirable characteristics. Therefore, four pairs of tips, representing wide variations of shape, were tested on 45° swept-forward and 45° swept-back large-scale wings.

In addition to the foregoing, studies were made of the effect of bodies of revolution mounted at the tip of the swept-back wing. Since the boundary layer of swept-back wings flows outward, accumulating at the tips and precipitating early tip stall, it was hoped that the low-pressure field surrounding the unducted bodies would create a suction powerful enough to draw off the accumulated boundary layer. In the case of the ducted bodies, it was hoped that the tip vortex would flow off the trailing end of the body thereby lowering the pressure in the duct enough to effect some boundary-layer removal.

SYMBOLS

α	angle of attack, degrees
C_L	lift coefficient (lift/qS)
C_m	pitching-moment coefficient about 0.25 M.A.C. $\left(\frac{\text{pitching moment}}{qS\ \text{M.A.C.}}\right)$
$C_{m_{0.15}}$	pitching-moment coefficient about 0.15 M.A.C.
C_{L_α}	rate of change of lift coefficient with angle of attack, per degree
$C_{L_{max}}$	maximum lift coefficient
q	dynamic pressure, pounds per square foot
A	aspect ratio based on effective span $\left(\frac{b_e^2}{S}\right)$
b_e	effective span, measured normal to plane of symmetry, feet (refer to figs. 1 and 2)
b	actual span, measured normal to plane of symmetry, feet
S	wing area, square feet
M.A.C.	mean aerodynamic chord of wing measured parallel to plane of symmetry $\left(\frac{2}{S}\int_0^1 c^2\,dy\right)$, feet

APPARATUS AND METHOD

The 45° swept-forward and the 45° swept-back large-scale wings were tested with four differently shaped pairs of tips. The airfoil sections of the wings, normal to the quarter-chord line, are NACA 0015 near the root and NACA 23009 at the tip, as designated in figures 1 and 2. The specified sweep of each wing is the sweep of its quarter-chord line. The tips are designated as parallel, oblique, normal, and rounded. The nomenclature of these first three shapes refers to the approximate angle of the edges relative to the air stream.) In each case the wings with parallel tips are wings investigated and reported in reference 1. Geometric characteristics of the wings with the various tips are shown in figures 1 and 2.

The 45° swept-back wing was also tested with body-of-revolution tips, with and without ducts. The basic bodies have an NACA 65-015 airfoil section and a 10-foot chord which is approximately twice the tip chord of the wing. They were mounted with their center lines parallel to and 3 inches above the chord plane of the wing. The ducted bodies have 2 feet of the rear portion removed to obtain sufficient duct-exit area. The duct inlet at the upper surface junction of the wing and body is approximately 4 feet long, averaging $2\frac{1}{2}$ inches in height, and fairs into a 6-inch-diameter outlet. Figure 3 shows the geometric characteristics of the swept-back wing with body-of-revolution tips.

The tests were conducted in the Ames 40- by 80-foot wind tunnel. The wings were attached to a boom and mounted in the tunnel as shown in figure 4. For most of the tests the wing-to-boom incidence was 5°. However, with the swept-forward wing at 5° incidence, angles of attack beyond that for maximum lift could not be realized because of limitations imposed by the support system. In order to determine the trend of post-stall characteristics, one test of the swept-forward wing with parallel tips was made with the wing-to-boom incidence increased to 15°.

TESTS AND RESULTS

Tests were made varying the angle of attack from zero lift through stall for the swept-forward and swept-back wings with each of the several tip shapes installed. Each test was made twice, first for the purpose of obtaining force data and second with the wing completely covered with tufts to obtain observations of the stall progression.

Tests with the body-of-revolution tips were made at a dynamic pressure of 15 pounds per square foot; all others were made at a

dynamic pressure of 25 pounds per square foot. These correspond to Reynolds numbers based on the mean aerodynamic chord of approximately 7.2×10^6 for the body-of-revolution tip tests, 9.3×10^6 for the other swept-back wing tests, and 10.7×10^6 for the swept-forward wing tests.

The basic data have been corrected for air-stream inclination, wind-tunnel-wall interference effects, and tares as described in reference 1.

The force data for the swept-forward wing are shown in figure 5, and the records of the tuft observations in figure 6. Similar data for the swept-back wing are shown in figures 8 and 9, respectively. Force data for the swept-back wings with the body of revolution tips are shown in figure 10.

There are some differences in the results presented for separate tests of apparently identical configurations. It is reasoned that these differences are the result of slight changes in configuration caused by reassemblies of the model between the various tests. Considering the objectives of this investigation, these differences do not appear to be of great significance.

DISCUSSION

It is evident from the force test results that no major changes in maximum lift coefficient or pitching-moment characteristics were realized through the installation of any of the various-shaped tips or the bodies of revolution. The maximum improvement in $C_{L_{max}}$ was 0.03. To a large extent the variations in C_{L_α} occurring in the linear portion of the curve can be attributed to differences in aspect ratio of the various configurations, rather than tip-shape change.

The oblique tips effected some changes in pitching moment at high angles of attack for both the swept-forward and the swept-back wings, although the improvements realized did not approach those that had been hoped for. For the swept-forward wing, pitching moment is given in figure 7 for a center-of-gravity location of 0.15 M.A.C., a reasonable location with regard to balance. Here it is seen that the unstable pitching moment which existed near stall has been almost eliminated by the installation of the oblique tips. This change is accompanied by some increase in stability at lower angles of attack. In the case of the swept-back wing, the oblique tips reduced the stability slightly in the low angle-of-attack range, in addition to decreasing the unstable pitching moment above $\alpha = 20^\circ$ (fig. 8).

The tuft observations showed that tip shape had some control over the stall progression of the swept-forward wing, though this was not reflected, except by the above-mentioned pitching-moment changes, in the force measurements. The normal tips and, to a lesser degree, the oblique tips evidenced tip stall not shown by the other tip shapes and, as a result, might reduce lateral-control effectiveness at high lift coefficients.

On the swept-back wing the various tips had little effect on the stall progression indicated by the tufts (fig. 9). In each case the stall was characterized by a strong leading-edge separation progressing inboard from the tips which, it might be expected, could be little affected by tip shape. In this and other swept-back wing studies, force tests show this sudden leading-edge flow separation is accompanied by a strong positive pitching-moment increment. It would seem, then, that if this separation can be delayed by some means, one of the most undesirable characteristics of swept-back wings will be overcome.

Tuft observations made with either the ducted or the unducted body-of-revolution tips indicated that while the bodies tended to draw off the boundary layer at low angle of attack, the boundary-layer drain control was so weak it became inadequate, and the normal stall pattern appeared at very low lift coefficients. The tufts indicated a flow existed through the ducted body prior to stall, but it was apparently so slight as to have no measurable effect in delaying the stall. At the first appearance of tip stall, the strong tip vortex moved inboard, and there was no longer any flow through the duct.

Ames Aeronautical Laboratory,
National Advisory Committee for Aeronautics,
Moffett Field, Calif.

REFERENCE

1. McCormack, Gerald M., and Stevens, Victor I.: An Investigation of the Low-Speed Stability and Control Characteristics of Swept-Forward and Swept-Back Wings in the Ames 40- by 80-Foot Wind Tunnel. NACA RRM No. A6K15, 1947.

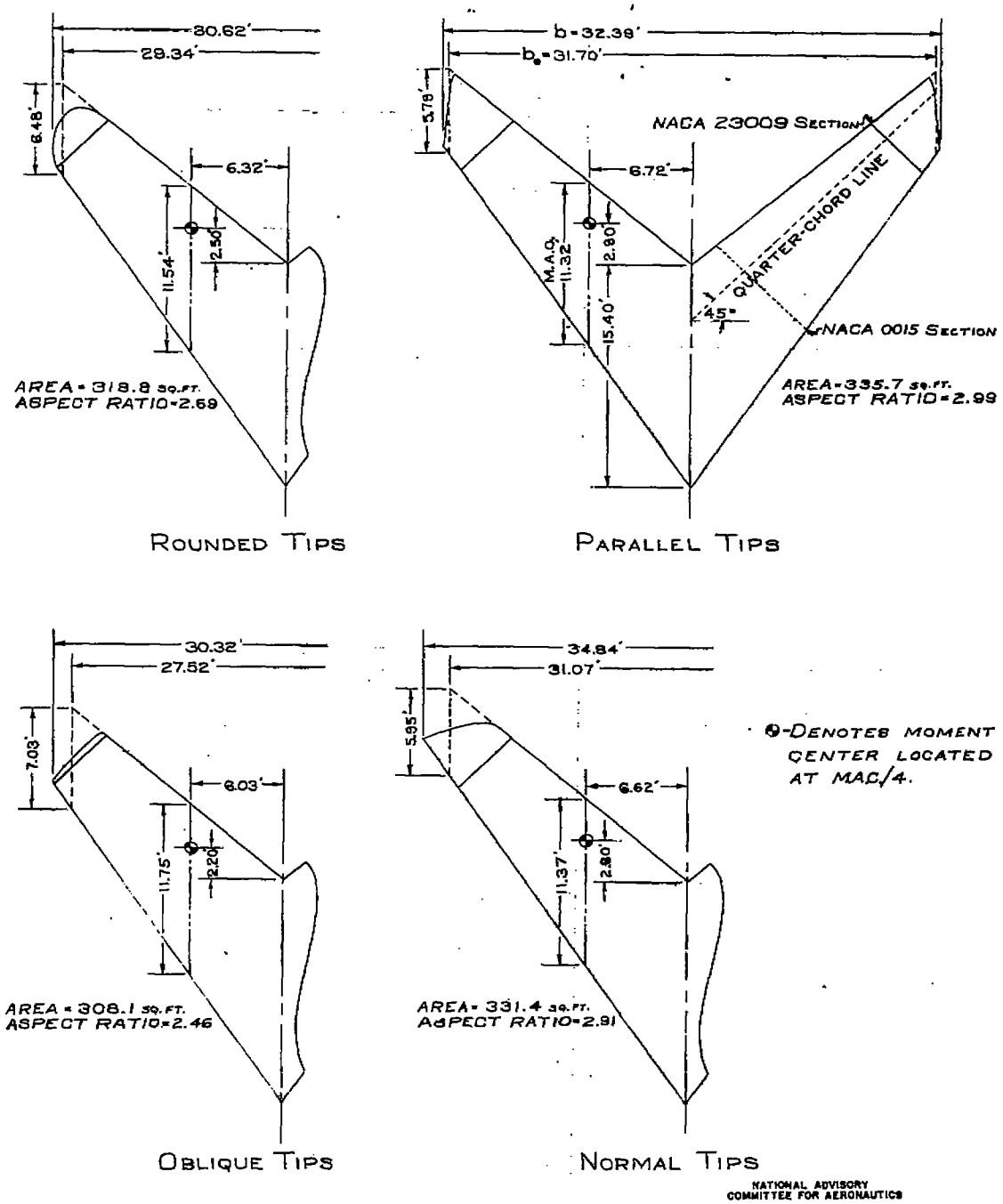

FIGURE 1.- GEOMETRIC CHARACTERISTICS OF 45-DEGREE SWEPT-FORWARD WING WITH VARIOUS TIPS.

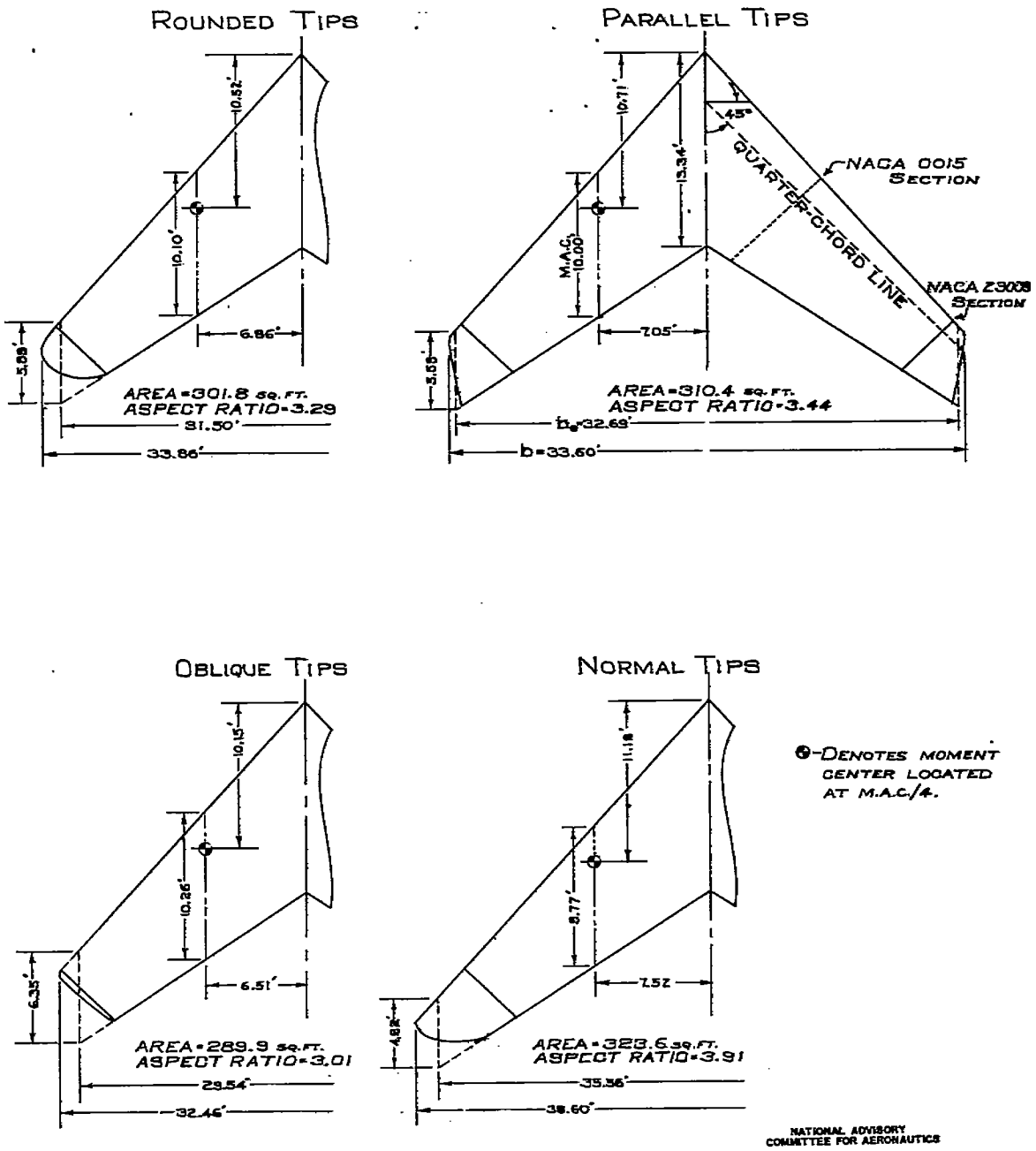

FIGURE 2.- GEOMETRIC CHARACTERISTICS OF 45-DEGREE SWEPT-BACK WING WITH VARIOUS TIPS.

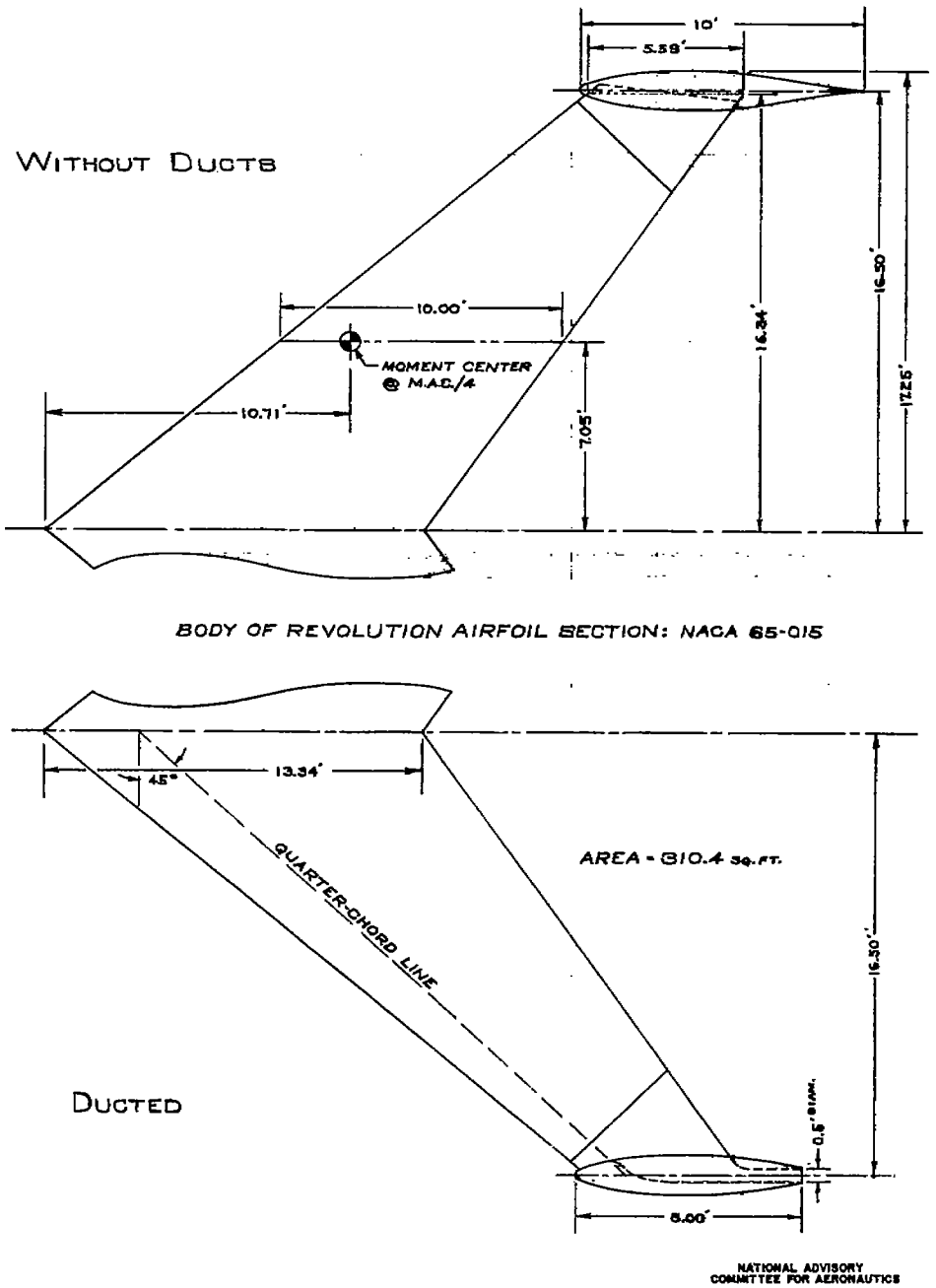

FIGURE 3.- GEOMETRIC CHARACTERISTICS OF 45-DEGREE SWEPT-BACK WING WITH BODY-OF-REVOLUTION TIPS.

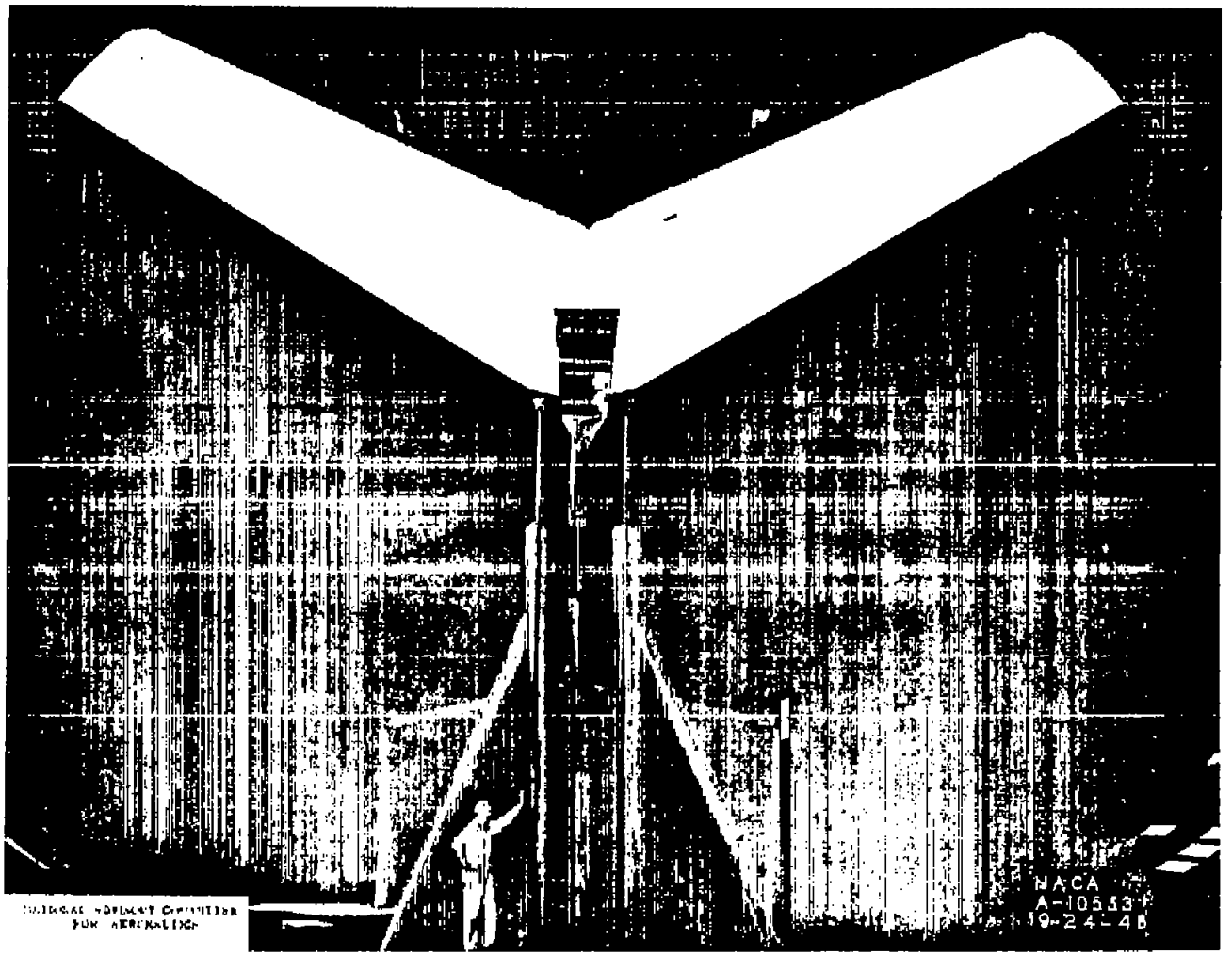

(a) Swept-forward wing with oblique tips.
Figure 4.– Test wings mounted in the Ames 40- by 80-foot wind tunnel.

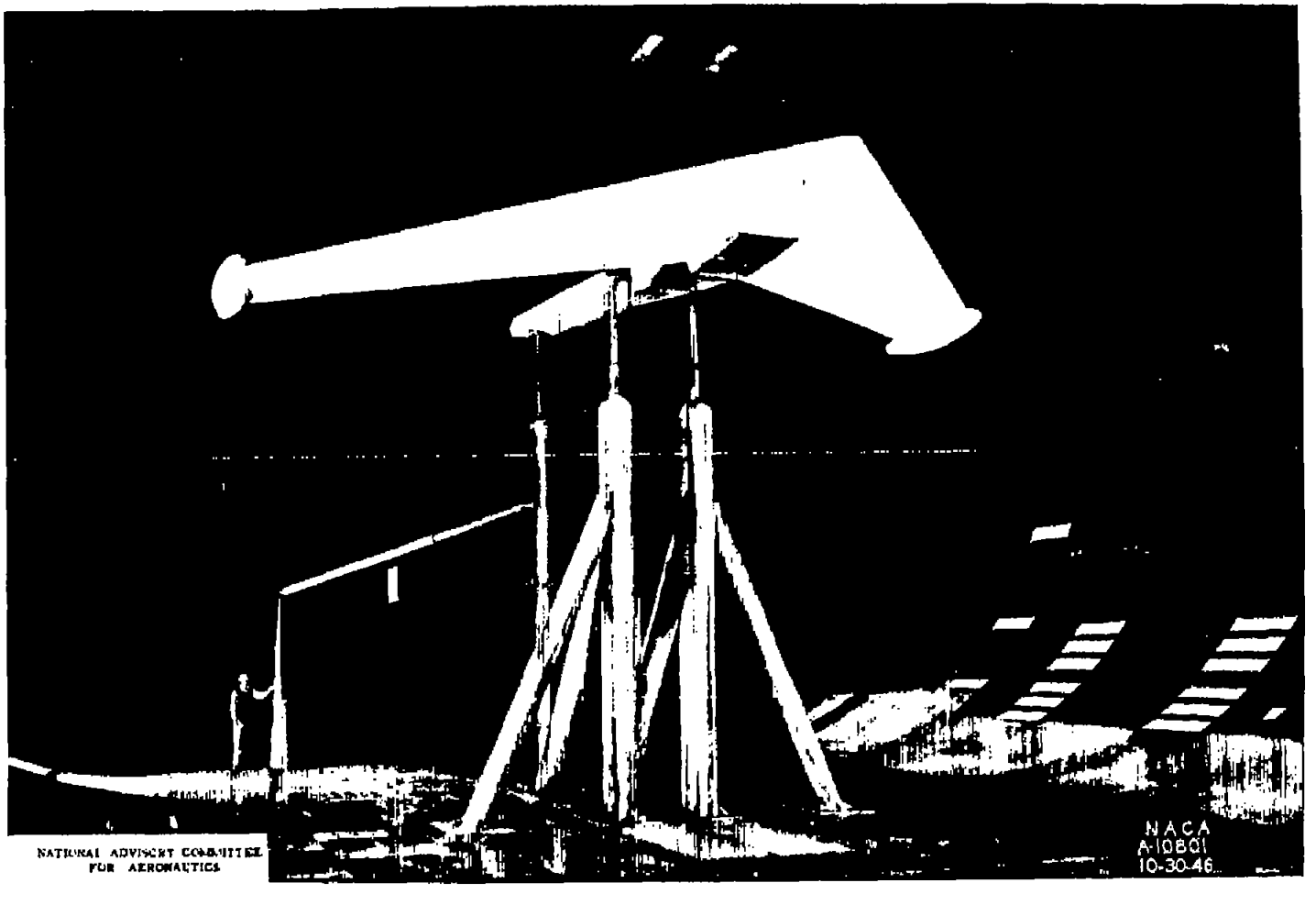

(b) 45° swept-back wing with ducted body-of-revolution tips.

Figure 4.– Concluded.

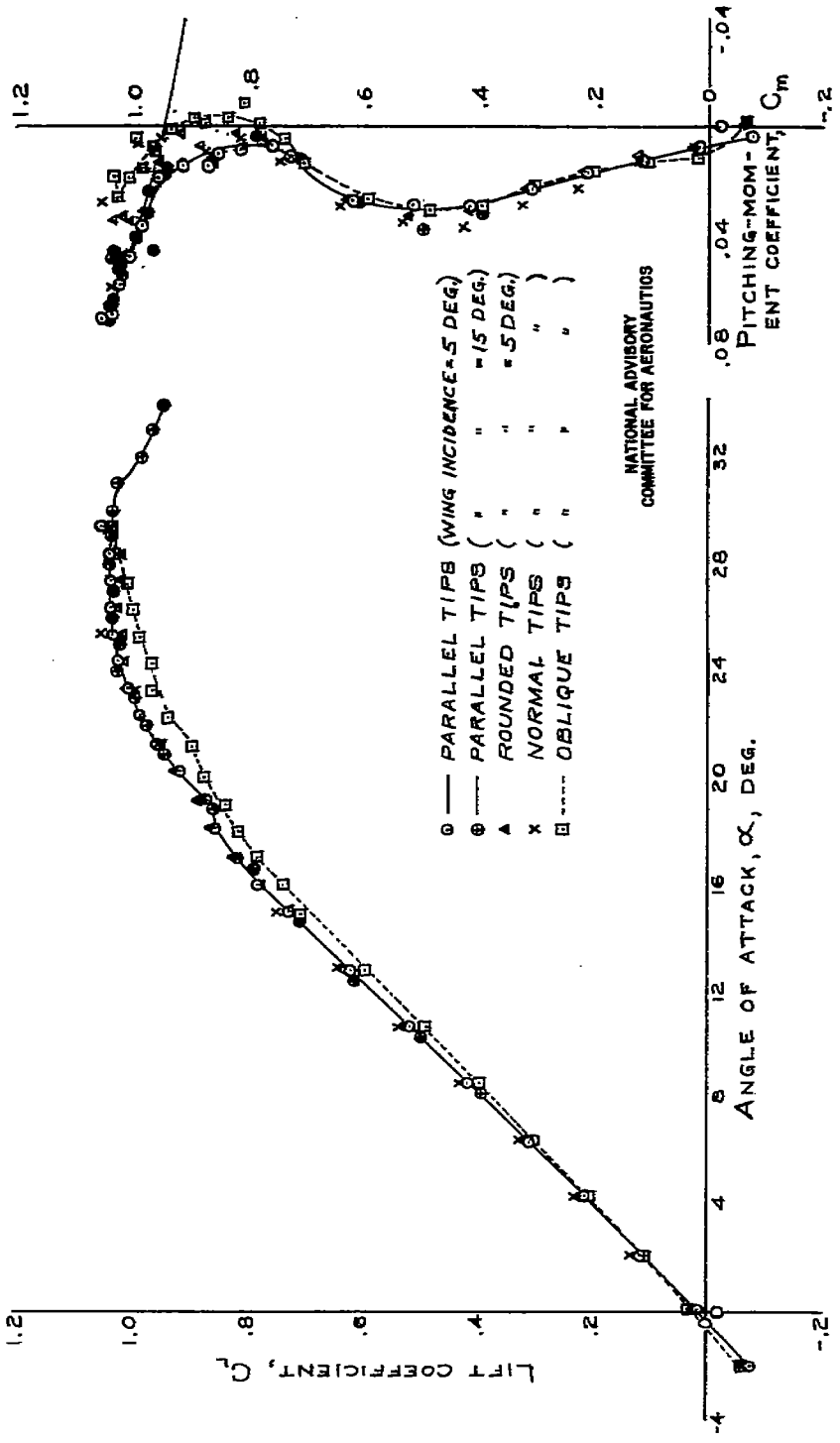

FIGURE 5.- AERODYNAMIC CHARACTERISTICS OF 45-DEGREE SWEPT-FORWARD WING WITH VARIOUS TIPS.

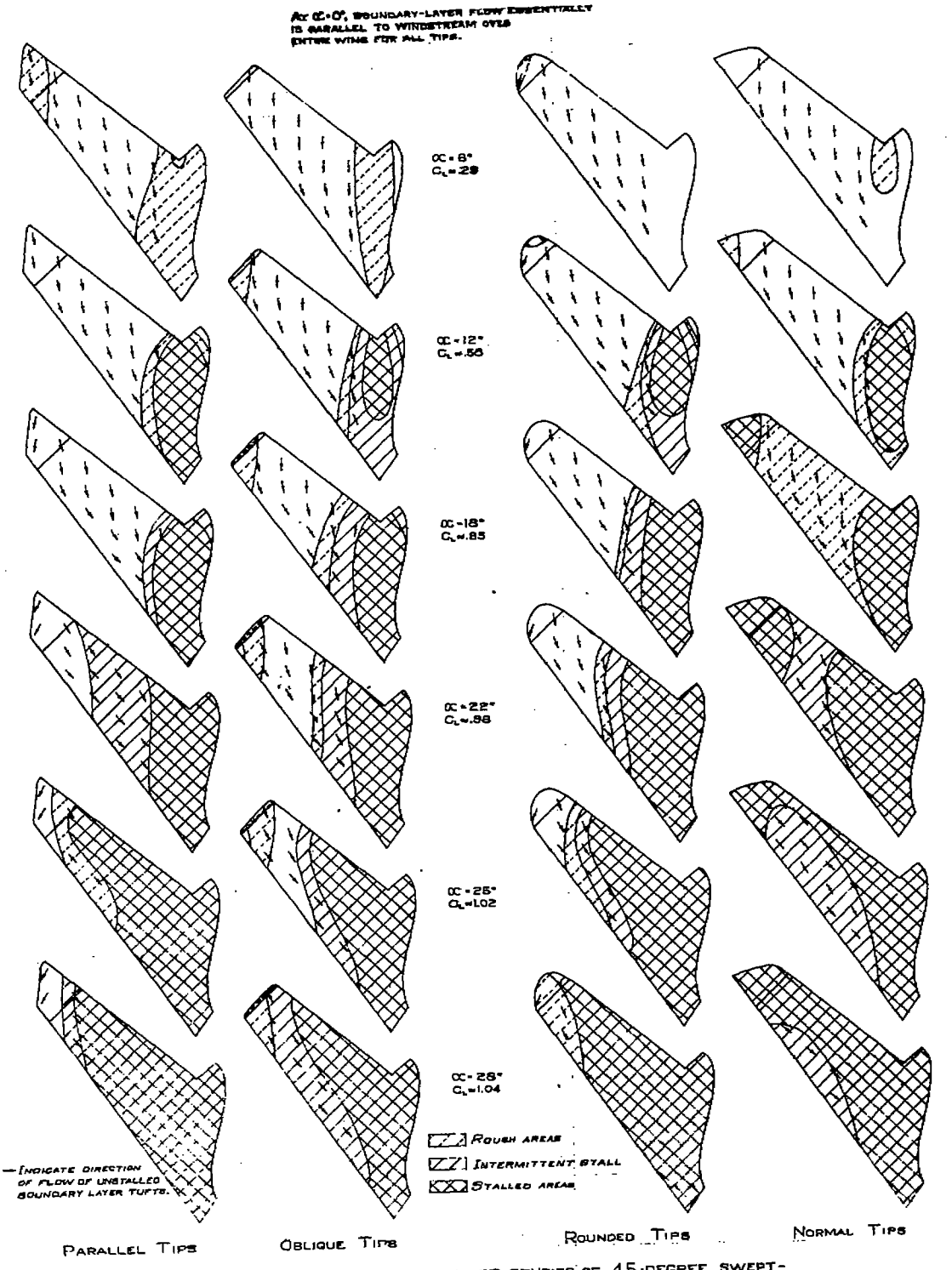

FIGURE 6.-BOUNDARY-LAYER TUFT STUDIES OF 45-DEGREE SWEPT-FORWARD WING WITH VARIOUS TIPS.

NATIONAL ADVISORY COMMITTEE FOR AERONAUTICS

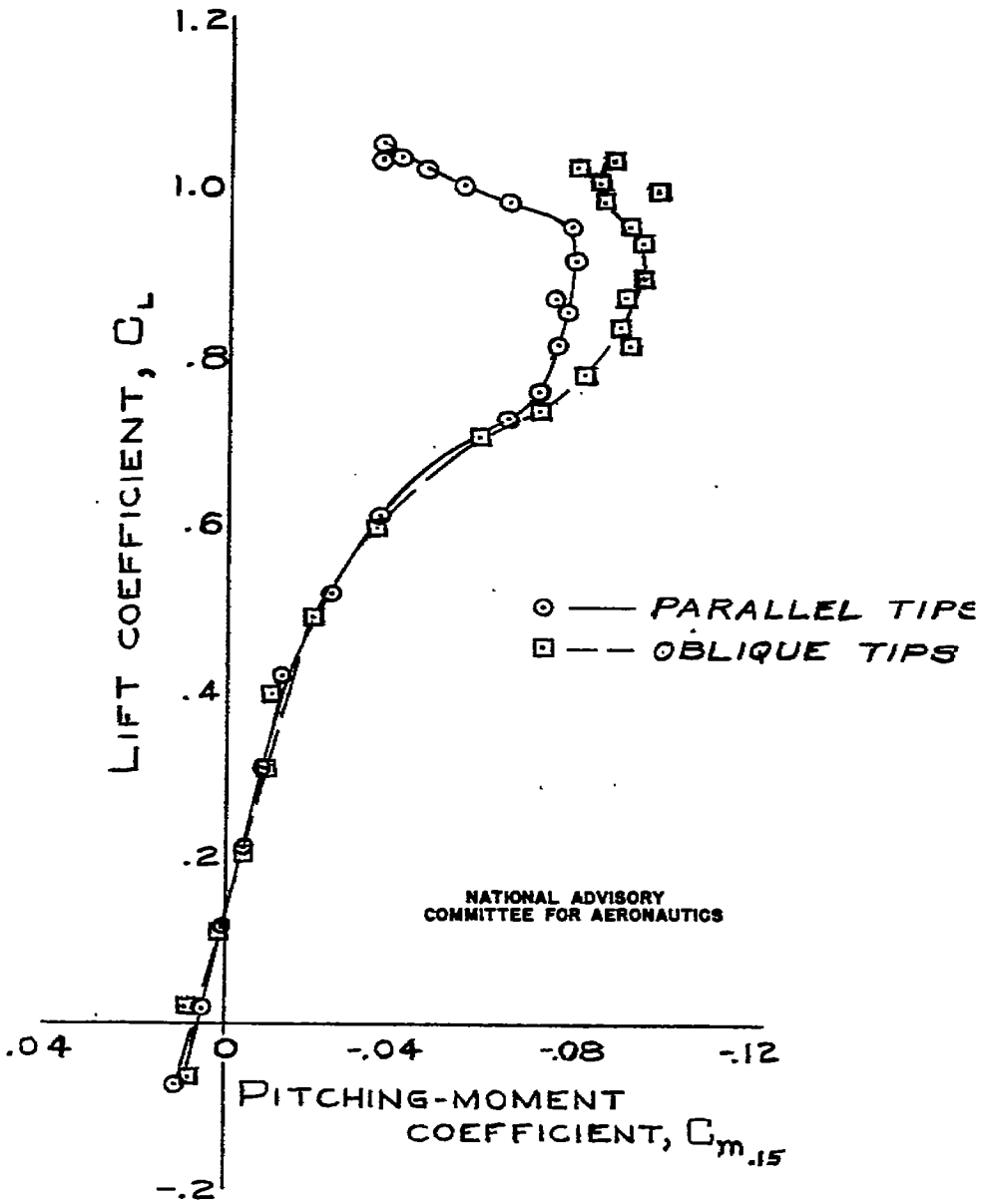

FIGURE 7.- COMPARISON OF PITCHING-MOMENT COEFFICIENT ABOUT .15 MAC. FOR SWEPT-FORWARD WING WITH PARALLEL AND OBLIQUE TIPS.

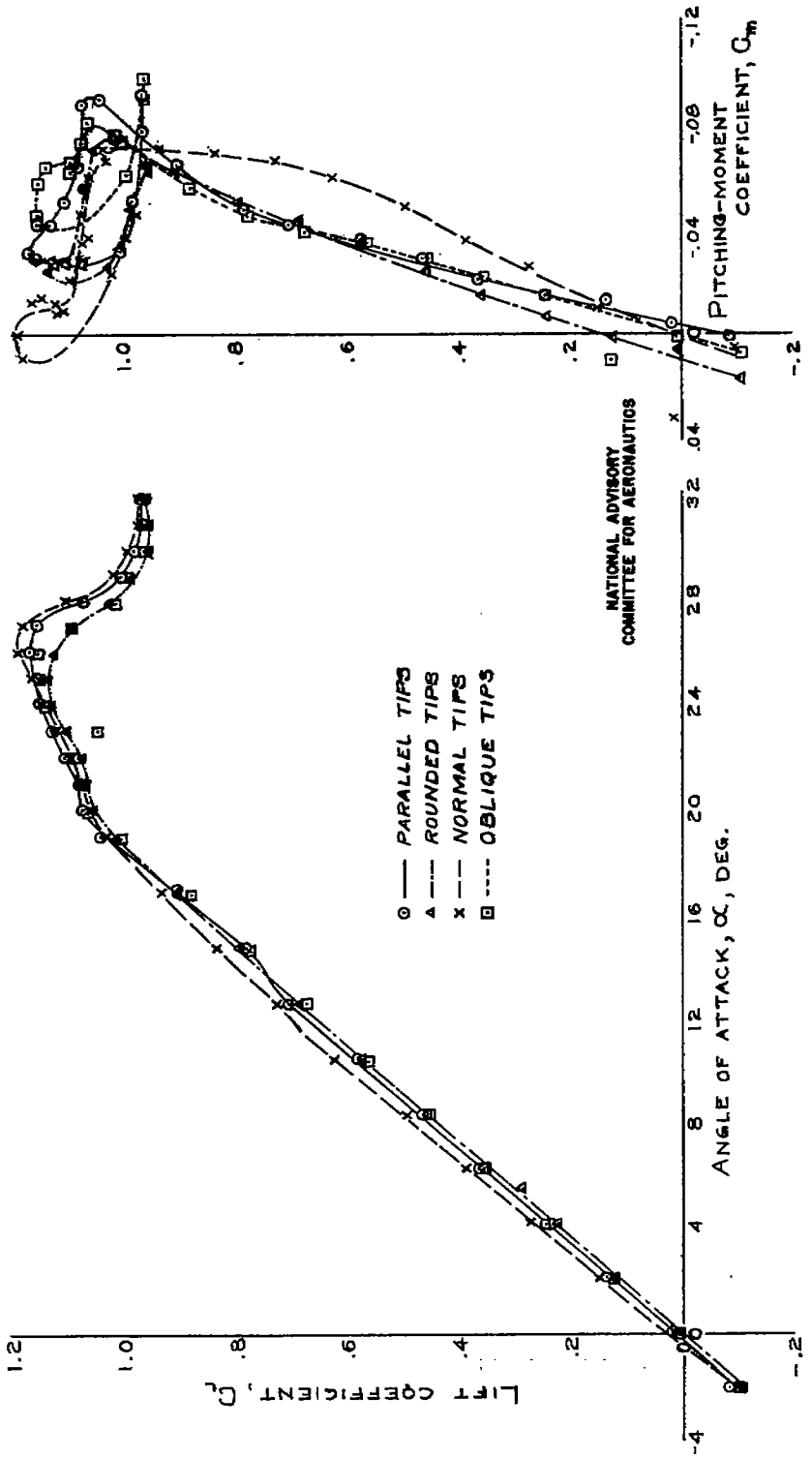

FIGURE 8.- AERODYNAMIC CHARACTERISTICS OF 45-DEGREE SWEPT-BACK WING WITH VARIOUS TIPS.

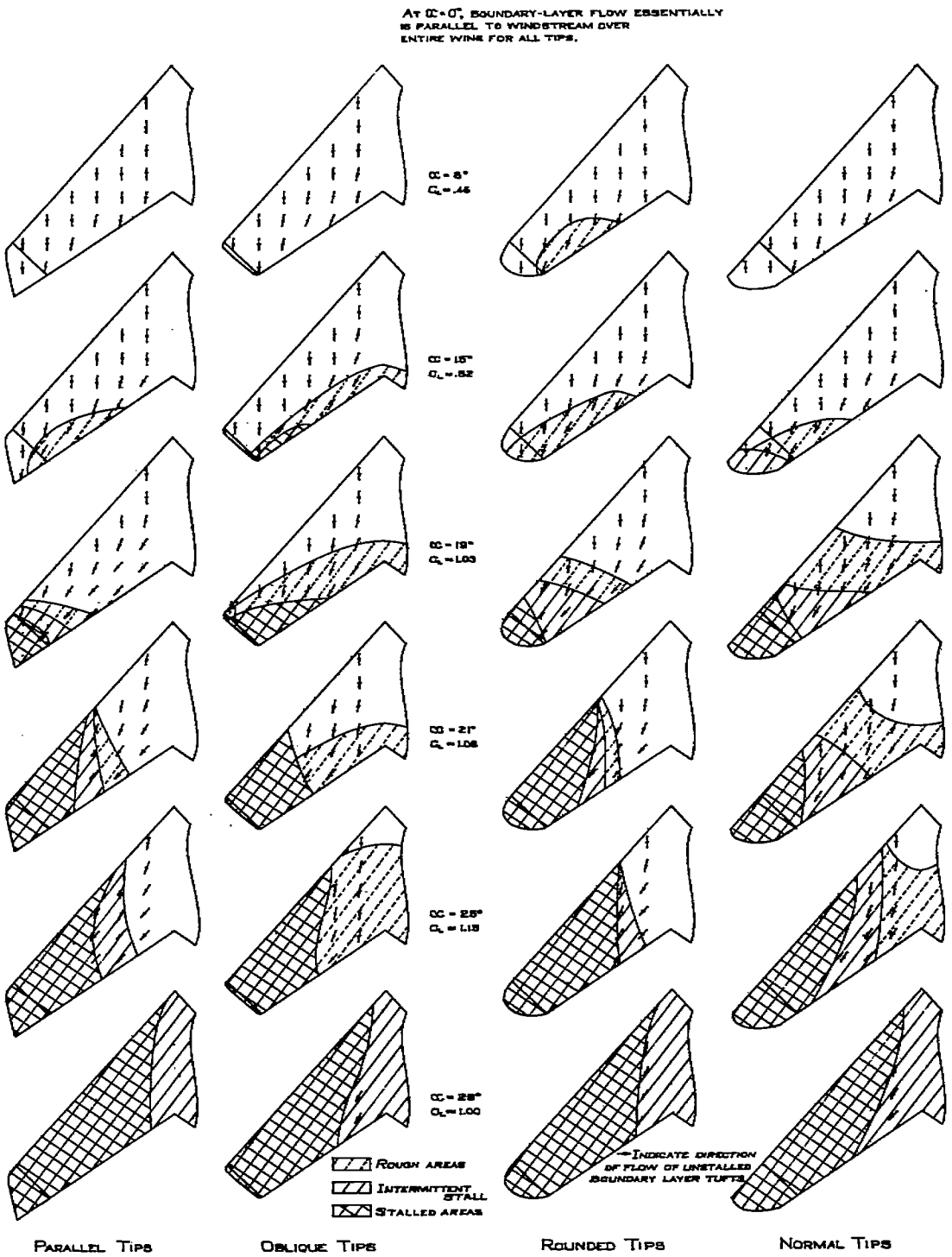

FIGURE 9.–BOUNDARY-LAYER TUFT STUDIES OF 45-DEGREE SWEPT-BACK WING WITH VARIOUS TIPS.

NATIONAL ADVISORY COMMITTEE FOR AERONAUTICS

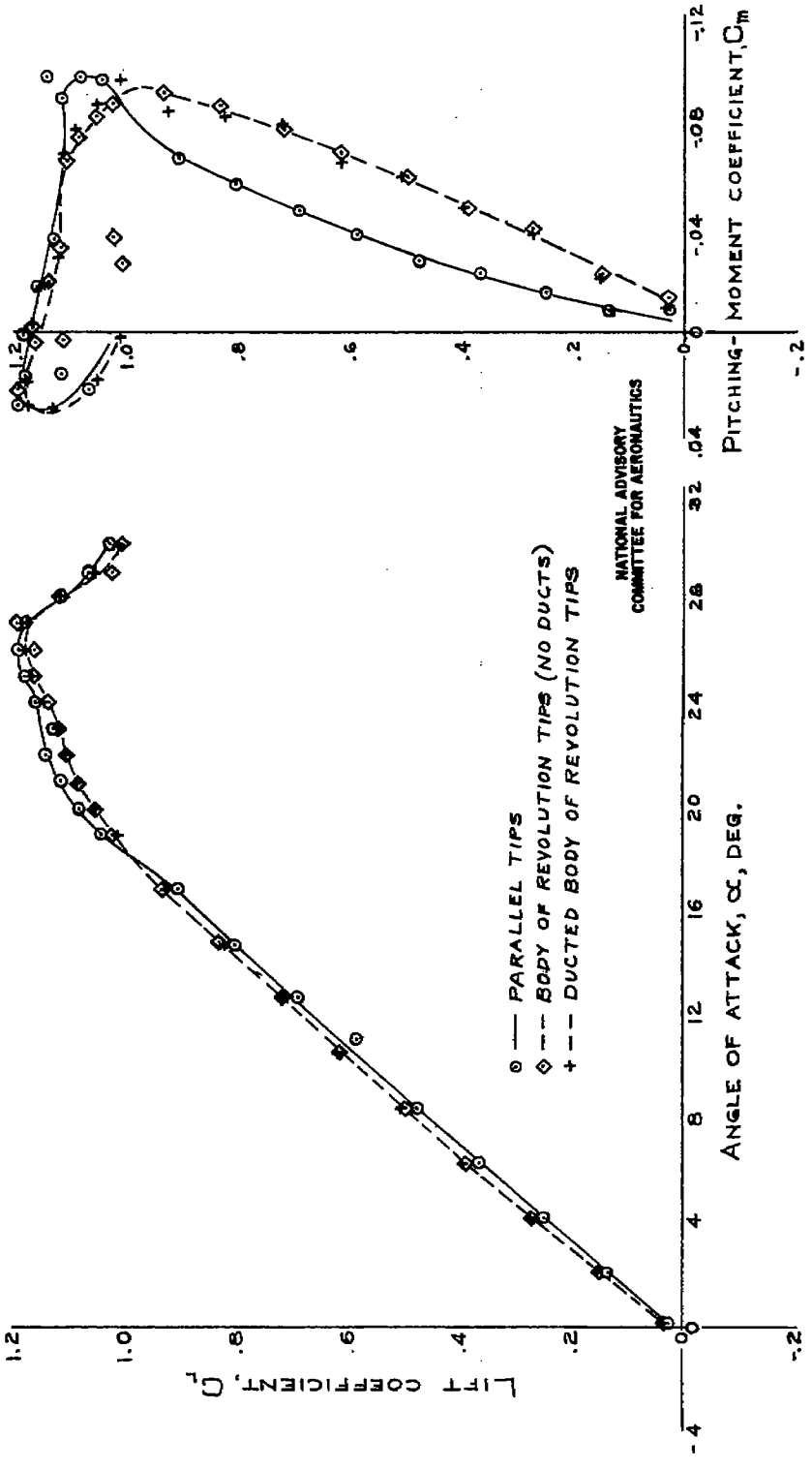

FIGURE 10.- AERODYNAMIC CHARACTERISTICS OF 45-DEGREE SWEPT-BACK WING WITH BODY OF REVOLUTION TIPS.

NASA Technical Library
3 1176 01434 4361