5

RM No. E6L19

UNAVAILABLE

JAN 24 1947

3161

Allison V-1710-93/6

Made Unavailable by Admin. Action per Hdqrs. let. dtd. 6-8-59/ BHM.

NACA

LANGLEY SUB-LIBRARY

RESEARCH MEMORANDUM

for the

Air Materiel Command, Army Air Forces

EFFECT OF VARIOUS METHODS OF BOUNDARY-LAYER CONTROL ON PERFORMANCE OF V-1710-93 ENGINE-STAGE SUPERCHARGER

By Robert C. Kohl and Donald R. Diggs

Aircraft Engine Research Laboratory
Cleveland, Ohio

FOR REFERENCE

NOT TO BE TAKEN FROM THIS ROOM

JAN 16 1947

CONTAINS PROPRIETARY INFORMATION

CLASSIFIED DOCUMENT

This document contains classified information affecting the National Defense of the United States within the meaning of the Espionage Act, USC 50:31 and 32. Its transmission or the revelation of its contents in any manner to an unauthorized person is prohibited by law. Information so classified may be imparted only to persons in the military and naval Services of the United States, appropriate civilian officers and employees of the Federal Government who have a legitimate interest therein, and to United States citizens of known loyalty and discretion who of necessity must be informed thereof.

TECHNICAL EDITING WAIVED

NATIONAL ADVISORY COMMITTEE FOR AERONAUTICS

WASHINGTON

UNAVAILABLE

NACA LIBRARY
LANGLEY MEMORIAL AERONAUTICAL LABORATORY
Langley Field, Va.

RESTRICTED

NASA Technical Library
3 1176 01435 0442

UNAVAILABLE

NATIONAL ADVISORY COMMITTEE FOR AERONAUTICS

RESEARCH MEMORANDUM

for the

Air Materiel Command, Army Air Forces

EFFECT OF VARIOUS METHODS OF BOUNDARY-LAYER CONTROL ON PERFORMANCE OF V-1710-93 ENGINE-STAGE SUPERCHARGER

By Robert C. Kohl and Donald R. Diggs

SUMMARY

Four methods of boundary-layer control were tried during an investigation to improve the flow in the impeller passages of a V-1710-93 engine-stage supercharger. The boundary layer along the impeller front shroud was removed by suction. In one method the removal was accomplished by recirculation of the air to the impeller inlet; in another method, by external removal. In the other methods, slots were cut through the impeller-blade faces first at 30 percent and then at 30 and 70 percent of the mean-flow-path length measured from leading edges of the rotating inlet guide vanes to introduce air from the high-pressure side of the blades into the region where stagnation and separation were suspected.

A slight improvement in performance was obtained when the boundary layer was removed through the impeller front shroud. In general, this improvement became more pronounced as the amount of air removed was increased even though the excessive impeller frontal clearance maintained for these tests, together with an exaggerated negative pressure gradient, apparently induced flow separation on the diffuser front and rear walls as well as on the impeller front shroud. The use of slots in the impellers at the locations selected had a detrimental effect on the supercharger performance characteristics.

~~RESTRICTED~~ UNAVAILABLE

INTRODUCTION

Studies of the air flow through the V-1710-93 engine-stage supercharger (reference 1) have indicated that the impeller passages flow only partly full, owing to flow separations along the impeller front shroud and within the impeller channels. Inasmuch as flow separation can be avoided by either properly removing or energizing the boundary layers in the regions of high adverse pressure gradients (references 2 and 3), an investigation was made on the engine-stage supercharger impeller to determine the effects of exercising simple boundary-layer controls on the impeller front shroud and along the impeller blades. Because no data for estimating the magnitude and extent of the adverse pressure gradients in an impeller have yet been acquired, the location of the devices for disturbing the boundary-layer flow had to be based on a purely qualitative study of the flow in impeller channels. The methods used for the boundary-layer control had to be restricted to those requiring only small alterations to the supercharger assembly.

In the first part of this investigation, provision was made for removal of the boundary layer by suction over the region of greatest curvature on the impeller front shroud. The air bled through the impeller front shroud could be removed either by external low-pressure exhausters or by recirculation of the air to the inlet duct immediately before the rotating inlet guide vanes. A standard V-1710-93 engine-stage impeller was used in these runs but the structural features of the bleeding apparatus necessitated the replacement of the vaned diffuser by a vaneless diffuser.

The second part of this investigation was concerned with energizing the boundary layer at selected points along the blade chord. Slots were provided at the downstream edge of the rotating guide vanes to let air from the high-pressure side of the impeller activate and disperse the boundary layer on the low pressure side, where severe adverse pressure gradients are undoubtedly present. After the effect of these slots had been experimentally determined, additional slots were provided at a station that was approximately 30 percent of the mean-flow-path length from the blade tips. This location was selected because it was believed that the unloading of the impeller blades begins in this neighborhood and because structural considerations did not permit the slotting of the blades at a station closer to the blade tips.

These investigations were made in a variable-component supercharger rig. Over-all adiabatic efficiencies, pressure coefficients,

and pressure ratios were obtained together with individual component efficiencies and total-pressure profiles at the impeller discharge. These characteristics are compared with the corresponding characteristics of the standard supercharger.

MODIFICATIONS

Impeller Front Shroud

A standard impeller assembly was used for the investigation of the effect of removing the boundary layer from the impeller front shroud and, for structural reasons, the standard $14\frac{1}{2}$-inch-diameter vaned diffuser was replaced by a constant-area vaneless diffuser of the same diameter. The diffuser is described in reference 1. A circular inlet to the impeller replaced the standard elliptical inlet. A perforated brass strip, 0.015 inch thick, with an open area of 30 percent and 952 perforations per square inch formed the part of the shroud through which the air was removed by suction (fig. 1). This sieve extended from a point approximately 0.50 inch inside the stationary shroud of the rotating inlet guide vanes to a point 0.90 inch before the impeller discharge and followed as closely as possible the contour of the impeller blades. The sieve was held in position by soldering it to two steel rings, one at the inner diameter and one at the outer diameter, which in turn were bolted to the front diffuser cover plate. The entire assembly was polished to a smooth finish and the contour of the impeller front shroud was similar to that of the part before modification. The clearance between the impeller and the impeller front shroud was increased from the standard 0.030 inch to 0.060 inch.

A recess was machined in the impeller front shroud to form a chamber beneath the brass sieve. This chamber led to an annular area surrounding the impeller inlet but separated from it. The annular area in turn was connected to either of two symmetrical manifolds, depending on whether the boundary layer was to be removed by external low-pressure exhaust or by recirculation. Figure 1(a) shows the arrangement used for external bleeding and figure 1(b), the arrangement for recirculation.

The manifold used in conjunction with external bleeding had two 2-inch-diameter outlets 180° apart. Both of these outlets led into a 3-inch-diameter pipe, which was connected to the laboratory

low-pressure exhaust system; the weight flow bled was limited by the minimum available exhaust pressure of 4 inches of mercury absolute. One problem encountered in the external-bleeding apparatus was that of equalizing the pressure distribution over the entire sieve. The pressure tended to be reduced over the areas near the two exhaust outlets. An elliptical gasket was inserted, which closed off most of the passage near the exhaust outlets and gradually opened the passage to full design width at the greatest distance from them. (See fig. 1(a).) Although the pressure distribution was equalized to a large extent, the gasket probably reduced the maximum flow bled through the shroud.

In order for boundary-layer-removal apparatus to be of practical value, a more simple exhaust installation must be provided. The external-bleeding duct was therefore replaced by a recirculatory system and a manifold that returned the air drawn through the sieve to the impeller inlet through a small gap in the wall separating the manifold from the inlet pipe (fig. 1(b)). The recirculating flow was induced by the expected rising pressure gradient along the impeller front shroud, which established over the boundary-layer-removal sieve a pressure greater than that existing in the inlet pipe for most of the operating range. This system had the disadvantage that no simple means of controlling or measuring the air bled could be readily provided.

Impeller

All impeller modifications were applied to a V-1710-93 engine-stage impeller. This impeller has 15 blades and a diameter of $9\frac{1}{2}$ inches. The sharp bend in the channel at the downstream edge of the rotating inlet guide vanes, which is at approximately 30 percent of the assumed mean-flow-path length, from the leading edge of the rotating inlet guide vanes, was one of the most probable regions of flow separation. Properly designed slots should reduce this separation by supplying high-energy air from the high-pressure side of the impeller channel to the low-pressure side where separation was suspected. This method has been employed on various slotted airfoils (reference 3). A photograph of the impeller slotted at approximately 30 percent of the mean-flow-path length, which was the first impeller modification investigated (modification A), is presented in figure 2. Edge 1 of the rotating inlet guide vanes was rounded on the high-pressure side to an arbitrary profile. Edge 4 of the impeller blades was shaped to the same profile on the low-pressure side. When the modified impeller was assembled with the modified rotating inlet guide vanes, the desired slot was formed.

If separation occurs in the impeller passages, the effective area of the discharge flow will be less than the full area at the impeller discharge. In order to energize the boundary layer and thus increase the effective discharge area, a second set of slots (modification B) was provided in the impeller blades in the region where blade unloading was believed to take place. These slots were cut as close to the outer diameter of the impeller as stress considerations would permit. (See fig. 3.) These considerations located the slots at approximately 70 percent of the mean-flow-path length. The slots through the impeller blades had a 0.10-inch throat width and were designed to direct the energizing air at an angle of 30° to the blade walls. The cuts extended through the blade fillets to the bottom of the impeller channels and the lines generating the cylindrical surfaces of the cuts were perpendicular to the assumed mean flow path. Edge 5 (fig. 3) was rounded and edge 6 was sharp. Edge 7 had a 0.02-inch radius and edge 8 was contoured into the blade wall. All machine work was polished to a smooth finish.

APPARATUS AND METHODS

Instrumentation

Each modification was investigated in a variable-component supercharger rig in accordance with the recommendations of reference 4. Extensive internal instrumentation was installed in order to evaluate the performance of the separate components. For the series of runs with the boundary-layer removal by suction on the front shroud, the setup was the same as that in reference 1, but additional instrumentation was installed in the boundary-layer-removal system. The static pressure in the chamber beneath the sieve through which the boundary layer was removed was measured by two static-pressure taps at opposite sides of the chamber 90° from the manifold outlets. A submerged flat-plate orifice was installed in the 3-inch-diameter pipe to meter the amount of air bled. The orifice installation was made according to A.S.M.E. standards (reference 5). Air temperatures at the orifice were measured by two thermocouples installed 3 diameters ahead of the orifice. A gate valve was provided in the orifice line to regulate the flow of the air bled. The temperature of the air removed by external bleeding was measured by calibrated iron-constantan thermocouples, one in each of the two manifold outlets approximately 2 inches from the chamber exit. These thermocouples established the fact that the heat loss between the chamber exit and the air-measuring orifice was negligible.

In the investigation of the modified impellers with a standard eight-vaned diffuser, the setup and internal instrumentation were the same as those of reference 6. In the present investigation, however, the yaw tube immediately after the impeller discharge mentioned in the references was replaced by a one-hole total-pressure-survey tube. No attempt was made to measure the angle of flow at the impeller discharge.

Methods

With boundary-layer removal by external low-pressure exhaust, the supercharger was run at constant values of weight flow at the inlet orifice for a range of weight flows of the air bled from zero to maximum. The weight flows of the air bled are expressed as percentages of the inlet weight flow. The maximum weight of air bled was 13.7 percent of the inlet weight flow (0.255 lb/sec) at an actual tip speed of 1000 feet per second. As the tip speed increased, the amount of air that could be bled became a smaller percentage of the total flow until at an actual tip speed of 1200 feet per second, 9.6 percent of the inlet weight flow (0.250 lb/sec) was the maximum obtainable. This reduction in percentage of weight flow bled was due to the rapid increase in inlet weight flow with tip speed as compared with relatively constant peak weight flows bled, which were limited by the capacity of the bleeding system.

Runs were made at five inlet equivalent volume flows at an actual tip speed of 1000 feet per second and at nine inlet equivalent volume flows at 1200 feet per second. Runs were also made at actual tip speeds of 800 and 1300 feet per second but because the trends were repeated at actual tip speeds of 1000 and 1200 feet per second, which bracket the design operating speed, only the performance at 1000 and 1200 feet per second is presented.

When the boundary-layer control was effected by recirculation to the inlet pipe, no provision was made for metering the amount of air recirculated. Consequently, the runs were made at actual tip speeds of 800, 1000, 1200, and 1300 feet per second in the manner recommended in reference 7. Because the trends at 800 and 1300 feet per second were repeated at 1000 and 1200 feet per second, only the performance at 1000 and 1200 feet per second is presented.

The flow characteristics on the impeller front shroud and the front and rear diffuser walls for both external and recirculatory bleeding systems were visually studied by means of lampblack patterns at one flow condition. The flow condition selected for this

study corresponded to the point of peak over-all adiabatic efficiency at an actual tip speed of 1200 feet per second. For the pattern with external boundary-layer removal, 12 percent of the inlet weight flow was removed through the bleeding system.

Impeller modifications A and B were investigated with a standard vaned diffuser at actual tip speeds of 800, 1000, 1200, and 1300 feet per second, according to standard supercharger performance-testing procedure (reference 7). Equivalent tip speeds corresponding to the actual tip speeds used throughout the present and reference investigations are given in the following table:

Actual tip speed (ft/sec)	Equivalent tip speed, ft/sec					
	Modification A	Modification B	Standard impeller, vaned diffuser (a)	Modified front shroud		Standard impeller, vaneless diffuser (b)
				External bleeding	Recirculatory bleeding	
800	776	779	777	774	776	(c)
1000	972	963	972	972	966	(c)
1200	1162	1155	1157	1164	1157	1169
1300	1252	1247	1263	1261	1249	(c)

[a]Data from reference 6.
[b]Data from reference 1.
[c]Data not used.

Static pressures at the inlet measuring station were maintained at 22±0.2 inches of mercury absolute for all runs in order to approximate pressure conditions in actual operation of the supercharger at maximum power at an altitude of 29,000 feet and to duplicate the inlet pressure conditions of the runs in references 1 and 6. For runs with all modifications, inlet air was drawn from the room and the temperatures varied from 81° to 109° F. Altitude and atmospheric exhaust back pressures were used to operate the unit over the desired range of pressure ratios.

CALCULATIONS

Calculations and presentation of the performance are in accordance with the recommendations of references 7 and 8 whenever

applicable. The efficiencies to the impeller and the diffuser exits are based on an arithmetic average of the total-pressure readings. The total temperature was assumed to be constant from the impeller exit to the outlet measuring station because the supercharger rig was well insulated.

When the boundary-layer air was removed by means of an external low-pressure exhaust, appreciable percentages of the air delivered to the impeller inlet were completely removed before the impeller exit. Conventional representations of the flow based on inlet conditions must therefore be considered inadequate because they fail to account for the air removed and the subsequent reduced flow quantities through most of the supercharger. The performance of the supercharger is therefore represented for this series of experiments by an equivalent volume flow based on the quantity of air actually delivered by the impeller and available to the engine. The function selected is $Q_2/\sqrt{T_2}$, which is discussed in reference 9. The factor Q_2 was calculated from the weight of air delivered by the impeller and the total density at the measuring station in the outlet pipe; T_2 is the total temperature at the same station. The weight flow delivered by the impeller was obtained by subtracting the weight of air bled through the impeller front shroud from the total weight flow at the impeller inlet.

RESULTS AND DISCUSSION

Modified Front Shroud

The over-all and component performance characteristics of the supercharger with the modified front shroud with both external and recirculatory methods of bleeding is shown in figure 4. The results with the external-bleeding system indicated that the effectiveness of the unit generally increased slightly as the amount of air removed through the impeller front shroud increased. The peak over-all adiabatic efficiency at an actual tip speed of 1000 feet per second was 0.62 with 12 percent (maximum) of the inlet weight flow removed by bleeding. At the same speed, the peak efficiency without bleeding was 0.59. At an actual tip speed of 1200 feet per second, the peak efficiency was 0.595 with 4 percent of the air bled and 0.58 without bleeding. Peak pressure ratios ranged from 1.75 with 14 percent (maximum) of the inlet weight flow bled to 1.73 without bleeding at an actual tip speed of 1000 feet per second, and from 2.15 with 10 percent (maximum) bled to 2.12 without bleeding at 1200 feet per second.

Comparable performance data from reference 1 for the original vaneless diffuser with an unmodified front shroud at an actual tip speed of 1200 feet per second (not shown in fig. 4) indicate that the greatest variation in characteristics between the modified and unmodified units is in the efficiency at the impeller exit. Boundary-layer control by suction on the impeller front shroud resulted in an increase in the efficiency at the impeller exit of 0.02 to 0.06 and a corresponding increase in the over-all performance of about 0.03 in the range where the over-all adiabatic efficiencies are above 0.55. (See fig. 4(c).)

The performance of the unit with the external bleeding system was better than that of the recirculatory system (fig. 4), which is partly attributed to the greater weight flows removed through the shroud. Measured pressure differentials across the sieve for both methods of bleeding indicated that the recirculated weight flows were considerably less than those obtainable with the external bleeding system even though the pressure-equalizing gasket reduced the exhaust area of the external bleeding system.

The effect of the percentage of air externally bled on the over-all adiabatic efficiency for several supercharger operating conditions is shown in figure 5. For each operating condition, the inlet weight flow to the supercharger was held at a constant value and the weight of air bled was varied. The curves show maximum increases in efficiency on the order of 0.02 as the amount of bleeding was increased to the maximum obtainable, which demonstrates the small effect of the bleeding.

In order to determine the effect of the energy lost in the externally bled boundary-layer air, several over-all adiabatic efficiencies at an actual tip speed of 1200 feet per second were recalculated. The energy imparted to the air removed by bleeding was added to the work performed by the supercharger. The performance values were unaffected by this calculation beyond the margin of experimental error for the range of air bled in these runs; the supercharger work lost in the air bled has therefore been neglected.

The total-pressure profiles at the impeller discharge with and without boundary-layer removal are compared in figure 6. The increase in pressure from the front wall to the center of the channel became more abrupt as the tip speed increased. This condition was due in part to the large frontal clearance between the impeller and the shroud (0.060 in.), which was nearly twice the normal running clearance. Increasing the impeller frontal clearance tends to aggravate backflow along the face of the shroud,

which could account for steep gradients of the pressure in this region. The increased clearance was established to prevent possible contact between the impeller and the fragile perforated section of the shroud. The effect of the perforated shroud surface and the large frontal clearance is shown by the greatly reduced pressure at the front wall (negative pressure gradient) in the tests with the modified front shroud without boundary-layer removal as compared with the pressure obtained with the front shroud before modification.

The presence of backflow was established by a lampblack pattern made at an equivalent volume flow corresponding to the point of peak efficiency at 1200 feet per second with the maximum available bleeding. The pattern indicated backflow over the entire front shroud surface and over all but the outside edge of the front diffuser-wall surface. Separation of the air stream from the rear diffuser wall in the direction of impeller rotation was indicated to a radius of approximately one-half inch from the diffuser discharge, where the boundary flow reversed from an inward spiral to an outward spiral. Lampblack traces similar in detail to those obtained with the external bleeding were obtained for the recirculating system. Evidence of separation and backflow was observed on the diffuser front and rear walls, as well as on the impeller front shroud.

Modified Impellers

The over-all performance of the two impeller modifications is compared in figure 7 with the over-all performance of the standard unit obtained from reference 6. At all tip speeds and throughout the air-flow range, the performance of the unit with the modified impellers was below that with the standard impeller. The decrease in efficiency was on the order of 0.01 to 0.03 and the operating range of the unit was reduced approximately 10 percent in the lower speed range. The pressure ratios obtained with the modified impellers were as much as 6 percent less than those obtained with the standard unit, the greatest reduction occurring with modification B at the highest tip speed. The pressure ratio decreases probably because the air passing through the blade slots is allowed to discharge with a tangential-velocity component considerably less than the impeller tip speed.

The adiabatic efficiencies to the impeller and diffuser exits are shown for both modifications and the standard impeller in figure 8. These efficiencies were consistently less for both modifications than for the standard combination. The difference

between the efficiencies to the impeller discharge of the modified and the standard impellers decreased progressively as the tip speed was increased. This decrease in component-efficiency difference was also evident in the efficiencies at the diffuser exit and in the outlet pipe although the effect of the modified impellers was substantially tempered by the masking action of the vaned diffuser and the large collector case.

Total-pressure profiles across the diffuser channel at the impeller discharge are indicative of the impeller performance because they represent the useful energy in the air supplied to the diffuser by the impeller. Because this energy is in the form of velocity, flat symmetrical profiles over a wide range of tip speeds are an indication of low mixing losses in the diffuser. The impeller-exit total-pressure profiles obtained in tests of the standard impeller are compared in figure 9 with those of the modified impellers. These data were obtained at an actual tip speed of 1000 feet per second, which is close to the design operating tip speed of 1040 feet per second. The asymmetrical profiles show very slight changes in the general pattern, which indicates that the slotted blades had little effect on the large variation in total pressure across the channel. The higher pressure ratios of modification A as compared with modification B are reflected in the component efficiencies (fig. 8(b)). A direct comparison between the individual profile curves at any similar flow condition is impossible because the equivalent volume flows at which the curves were obtained varied slightly for each run.

The negative results obtained in these tests constitute no condemnation of the slotted-airfoil theory as applied to impeller blades. The modifications were somewhat arbitrarily designed on the basis of inadequate data and the location of the second set of blade slots at 70 percent of the mean-flow-path length was determined primarily by stress, rather than aerodynamic, considerations.

SUMMARY OF RESULTS

Four methods of boundary-layer control were investigated on a V-1710-93 engine-stage supercharger. The boundary-layer air was removed through the impeller front shroud by external suction and by recirculation to the inlet duct. The impeller blades were slotted at 30 percent and at 30 and 70 percent of the assumed mean-flow-path length. The front-shroud modifications were investigated with a $14\frac{1}{2}$-inch-diameter vaneless diffuser; the impeller

modifications were investigated with a standard vaned diffuser of the same diameter. Runs with these four modifications in a variable-component supercharger rig gave the following results:

1. Boundary-layer control by removing air through the impeller front shroud slightly improved the supercharger performance. In general, when other conditions were held constant, the adiabatic efficiency and the pressure ratio slightly improved as the percentage of weight flow bled was increased even though the excessive impeller frontal clearance maintained for this investigation, together with an exaggerated negative pressure gradient, apparently induced flow separation on the diffuser front and rear walls as well as on the impeller front shroud.

2. When the boundary-layer air was externally removed by low-pressure exhaust, the performance of the unit was improved in every respect over the useful operating range of the supercharger as compared with the performance of the unit when the boundary-layer air was recirculated to the inlet.

3. The addition of blade slots at 30 percent and at 30 and 70 percent of the mean flow path in the impeller resulted in decreased performance characteristics based on impeller-discharge, diffuser-discharge, and over-all measurements.

4. The asymmetrical total-pressure distribution at the impeller exit was only very slightly improved by the addition of slots in the impeller blades.

5. The empirical nature of the slot design together with the restrictions imposed by the impeller stress considerations permitted no general conclusions to be drawn concerning the merits of impeller-blade slotting.

Aircraft Engine Research Laboratory,
National Advisory Committee for Aeronautics,
Cleveland, Ohio.

Robert C. Kohl,
Mechanical Engineer.

Donald R. Diggs,
Mechanical Engineer.

Approved:
Robert O. Bullock,
Mechanical Engineer.

Oscar W. Schey,
Mechanical Engineer.

rl

REFERENCES

1. Douglas, John E., and Schwartz, Irving R.: Performance of the Modified V-1710-93 Engine-Stage Supercharger with a Constant-Area Vaneless Diffuser. NACA RM No. E6K22, Army Air Forces, 1946.

2. Ackeret, J.: Removing Boundary Layer by Suction. NACA TM No. 395, 1926.

3. Lachmann, C., Weiselsberger, C., Katzmayr, R., and Kirste, L.: Experiments with Slotted Wings. I - Slotted Wing Sections. II - Gottingen Tests of Handley Page Wings. III - Experiments with Slotted Wings. NACA TN No. 71, 1921.

4. Ellerbrock, Herman H., Jr., and Goldstein, Arthur W.: Principles and Methods of Rating and Testing Centrifugal Superchargers. NACA ARR, Feb. 1942.

5. Anon.: Flow Measurement by Means of Standardized Nozzles and Orifice Plates. Ch. 4, pt. 5 of A.S.M.E. Power Test Codes, 1940.

6. Klein, Harold, and Douglas, John E.: Performance of the Engine-Stage Impeller and Diffuser of the Allison V-1710-93 Engine. NACA MR No. E6B15, Army Air Forces, 1946.

7. NACA Subcommittee on Supercharger Compressors: Standard Procedures for Rating and Testing Centrifugal Compressors. NACA ARR No. E5F13, 1945.

8. NACA Subcommittee on Supercharger Compressors: Standard Method of Graphical Presentation of Centrifugal Compressor Performance. NACA ARR No. E5F13a, 1945.

9. Bullock, Robert O., Keetch, Robert C., and Moses, Jason J.: A Method of Matching the Performance of Compressor Systems with That of Aircraft Power Sections. NACA ARR No. E6D17, 1946.

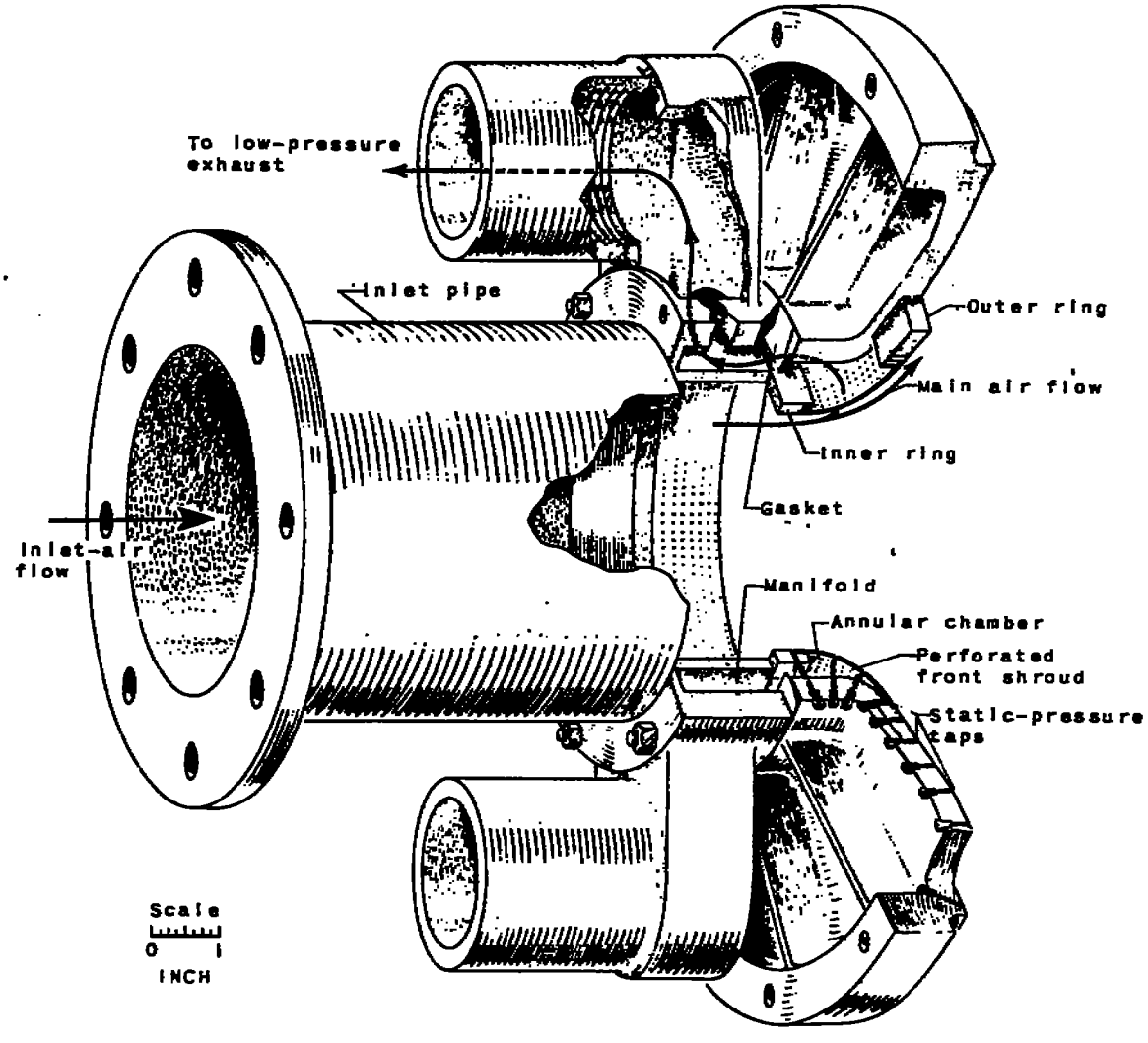

(a) External.

NATIONAL ADVISORY COMMITTEE FOR AERONAUTICS

Figure 1. - Bleeding apparatus used in tests of V-1710-93 engine-stage supercharger with boundary-layer control by suction on impeller front shroud.

256-580

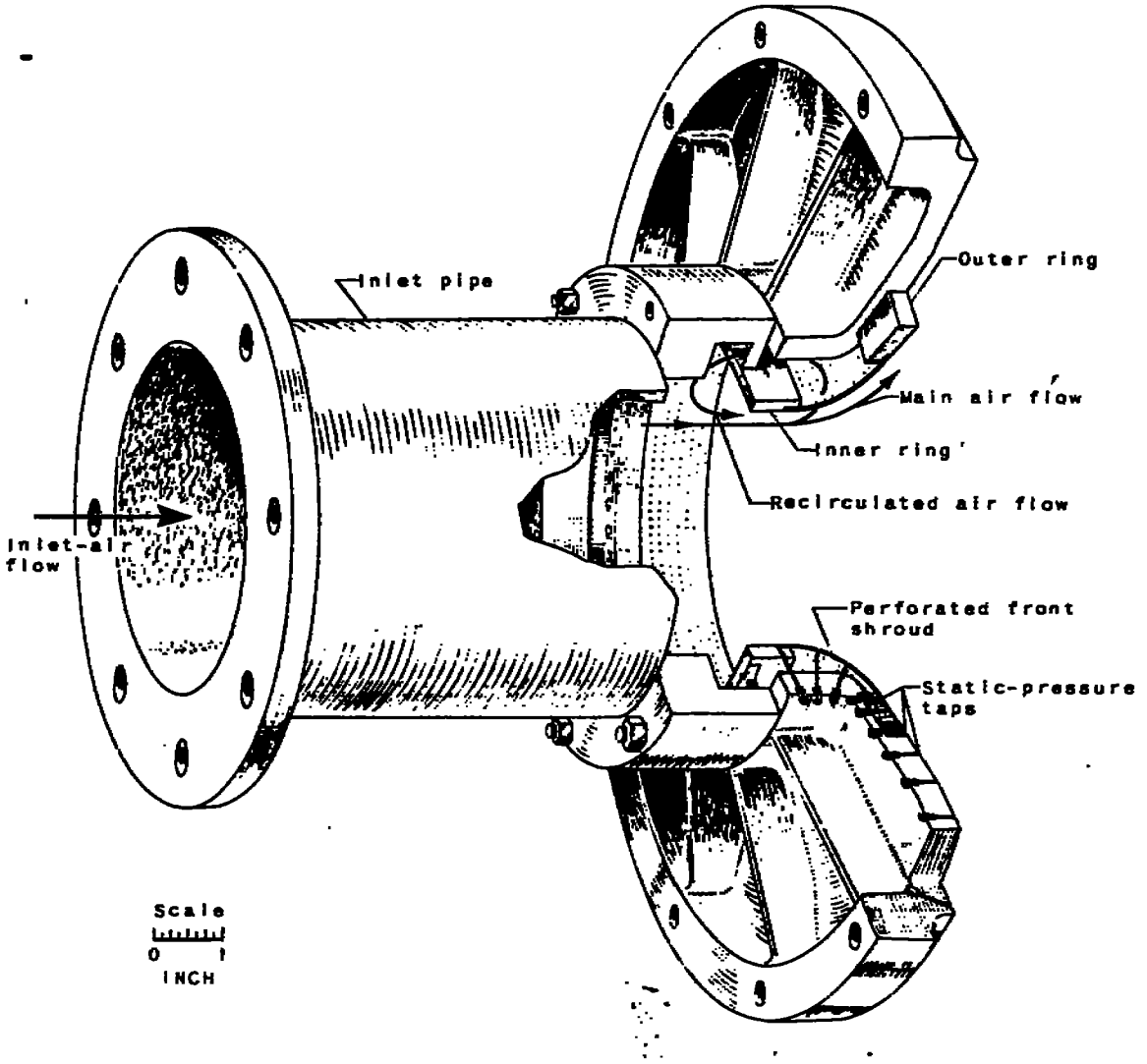

(b) Recirculatory.

NATIONAL ADVISORY COMMITTEE FOR AERONAUTICS

Figure 1. - Concluded. Bleeding apparatus used in tests of V-1710-93 engine-stage supercharger with boundary-layer control by suction on impeller front shroud.

256-579

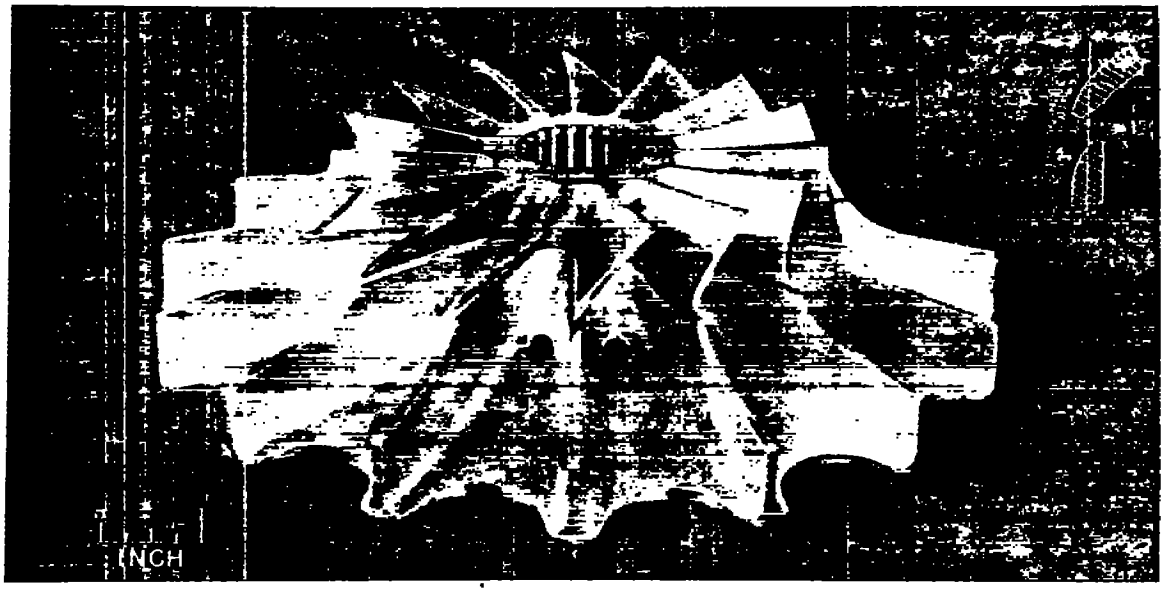

Figure 2. - Standard impeller of V-1710-93 engine-stage supercharger with slots cut at downstream edge of rotating inlet guide vanes (30 percent of mean-flow-path length) (modification A).

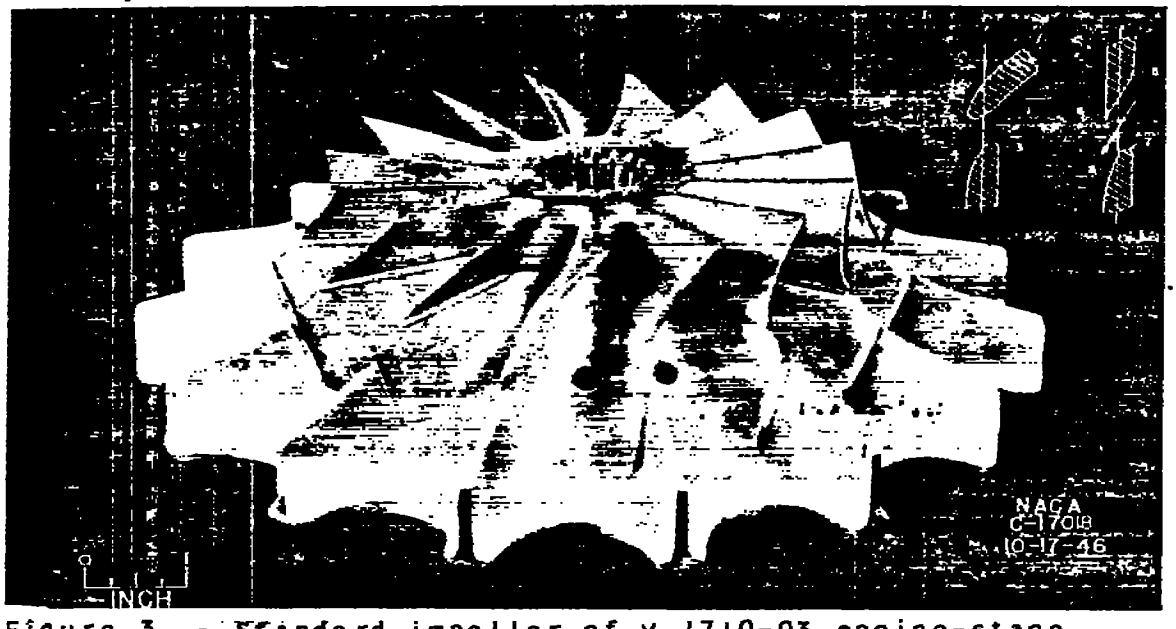

Figure 3. - Standard impeller of V-1710-93 engine-stage supercharger with slots cut at downstream edge of rotating inlet guide vanes (30 percent of mean-flow-path length) and through impeller blades (70 percent of mean-flow-path length) (modification B).

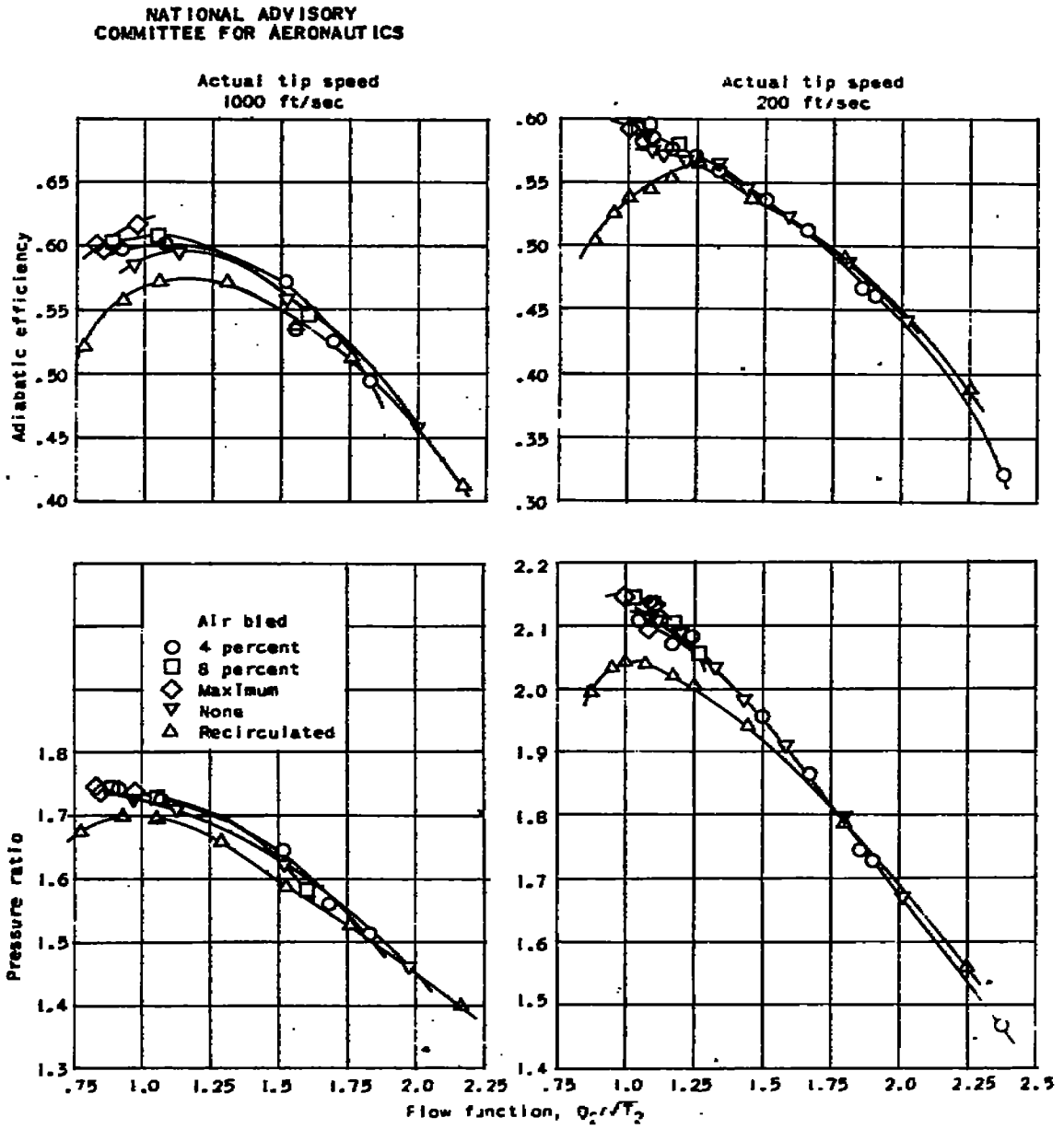

(a) Over-all performance characteristics.

Figure 4. - Over-all and component performance characteristics of standard V-1710-93 engine-stage impeller with vaneless diffuser and boundary-layer control on impeller front shroud and with internal instrumentation.

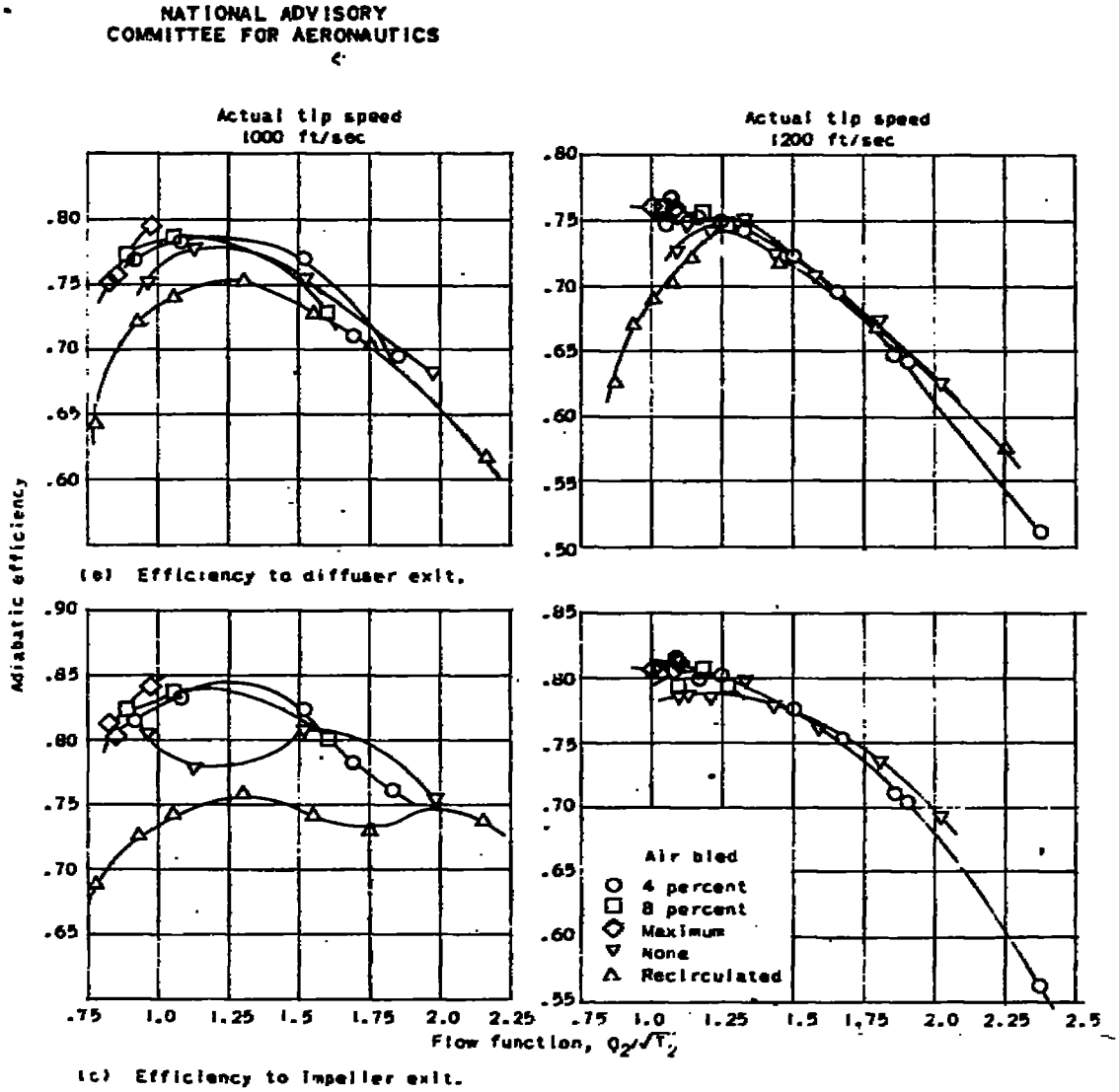

(c) Efficiency to impeller exit.

Figure 4. - Concluded. Over-all and component performance characteristics of standard V-1710-93 engine-stage impeller with vaneless diffuser and boundary-layer control on impeller front shroud and with internal instrumentation.

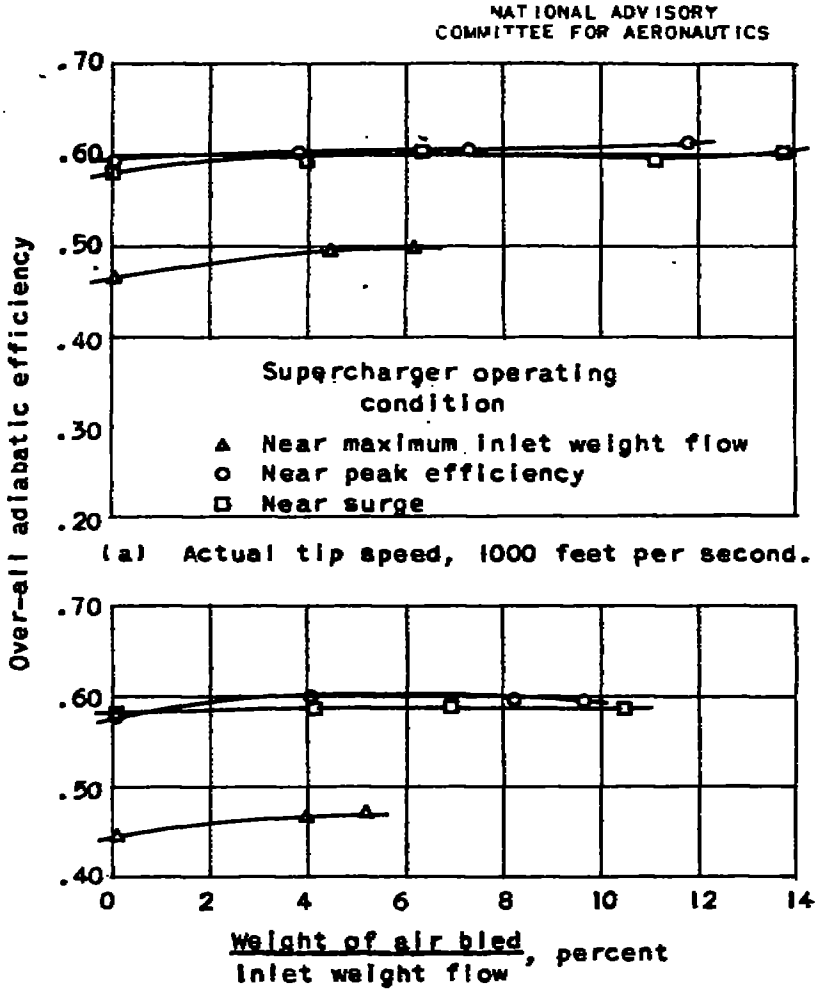

Figure 5. - Effect of boundary-layer removal for several operating conditions on over-all adiabatic efficiency of standard V-1710-93 engine-stage impeller with vaneless diffuser with internal instrumentation. (Inlet weight flow held constant.)

NATIONAL ADVISORY
COMMITTEE FOR AERONAUTICS

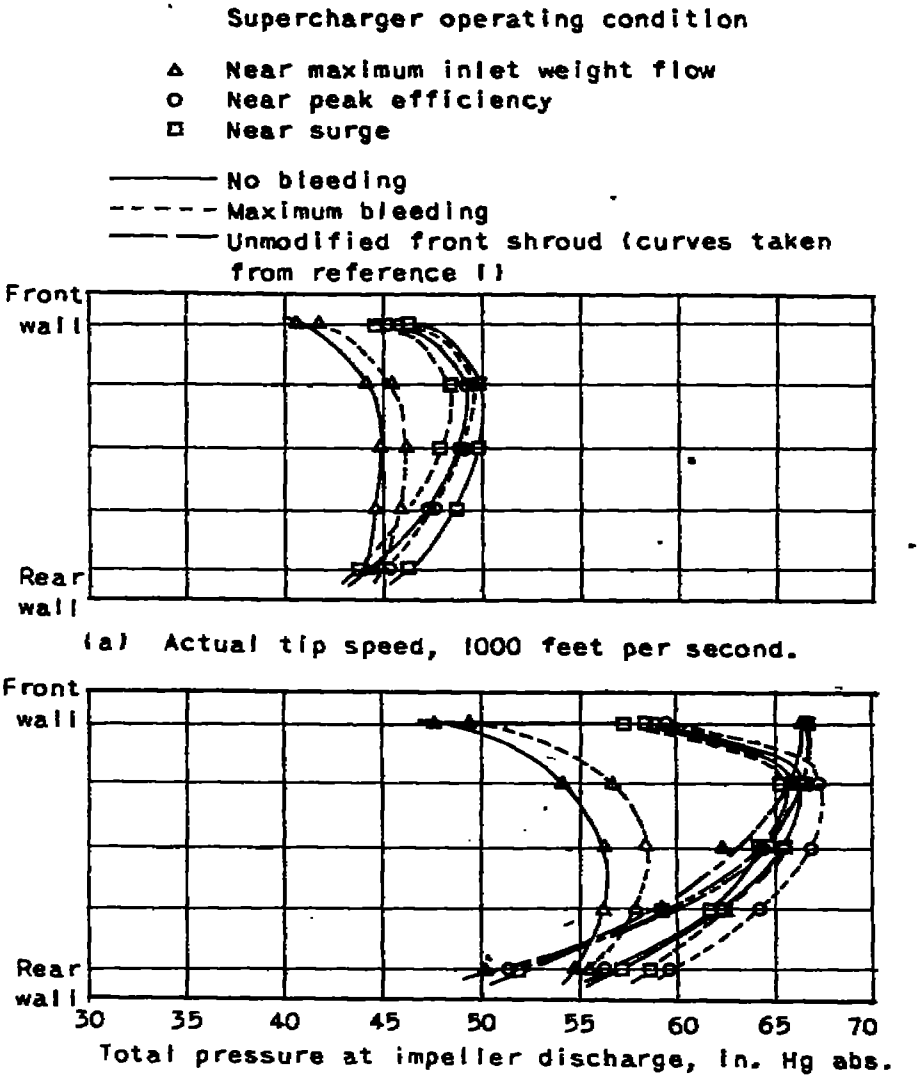

Figure 6. - Total-pressure profiles at impeller discharge of standard V-1710-93 engine-stage impeller with vaneless diffuser with and without boundary-layer control.

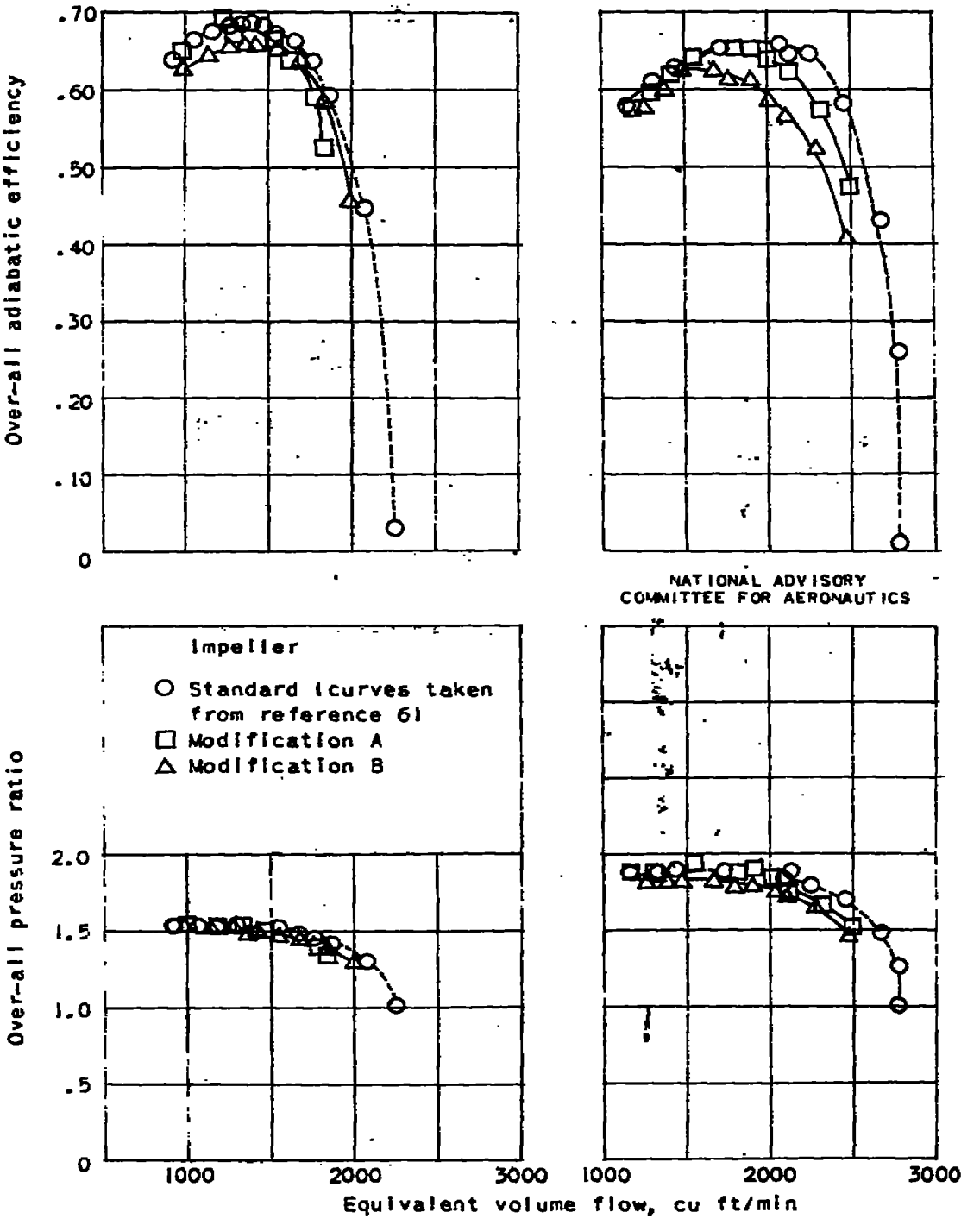

(a) Actual tip speed, 800 feet per second.

(b) Actual tip speed, 1000 feet per second.

Figure 7. - Over-all performance characteristics of standard and modified V-1710-93 engine-stage impellers with standard 8-vaned diffuser with internal instrumentation.

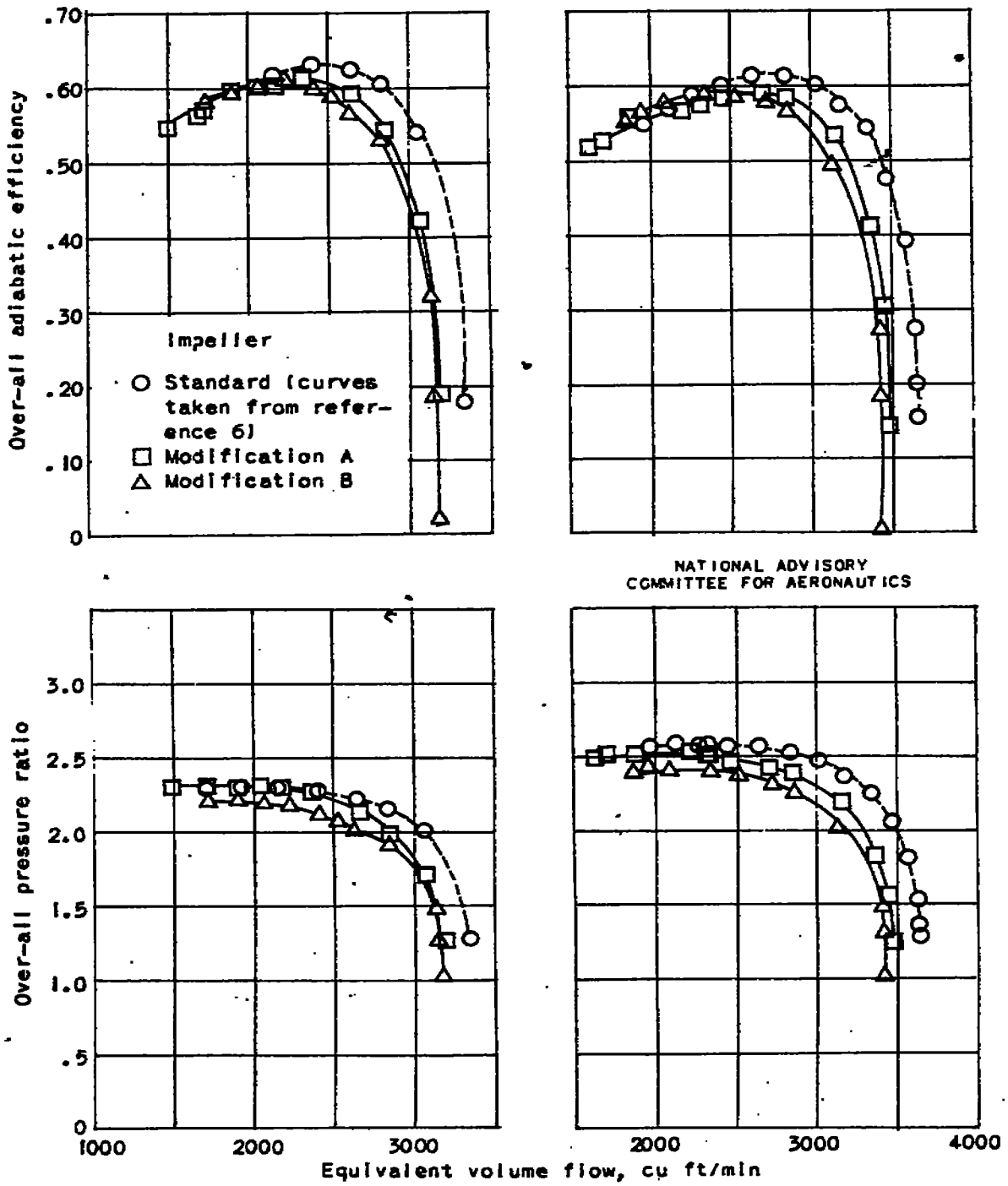

(c) Actual tip speed, 1200 feet per second.

(d) Actual tip speed, 1300 feet per second.

Figure 7. - Concluded. Over-all performance characteristics of standard and modified V-1710-93 engine-stage impellers with standard 8-vaned diffuser with internal instrumentation.

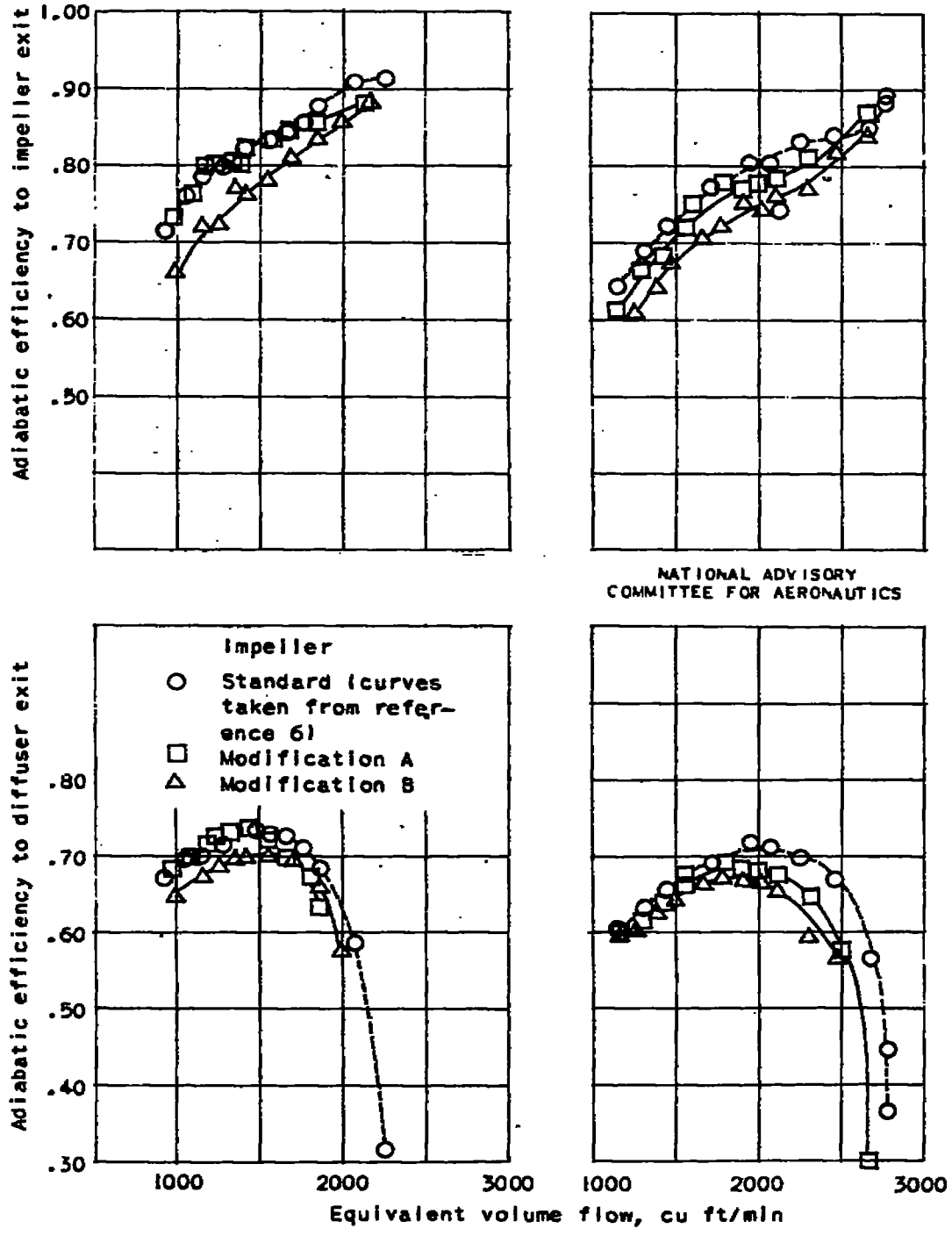

(a) Actual tip speed, 800 feet per second.

(b) Actual tip speed, 1000 feet per second.

Figure 8. - Component efficiencies of standard and modified V-1710-93 engine-stage impellers with standard 8-vaned diffuser with internal instrumentation.

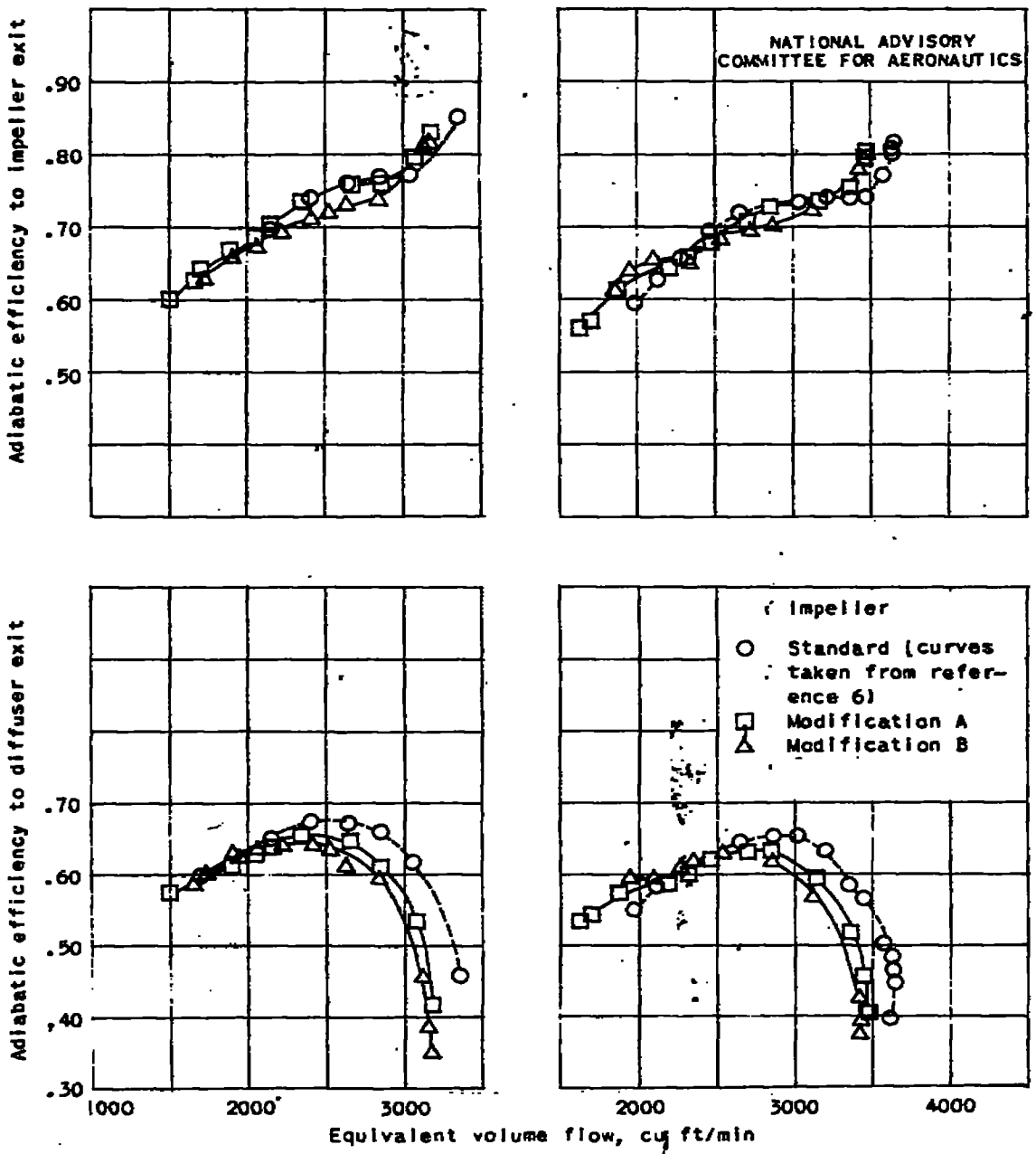

(c) Actual tip speed, 1200 feet per second.

(d) Actual tip speed, 1300 feet per second.

Figure 8. - Concluded. Component efficiencies of standard and modified V-1710-93 engine-stage impellers with standard 8-vaned diffuser with internal instrumentation.

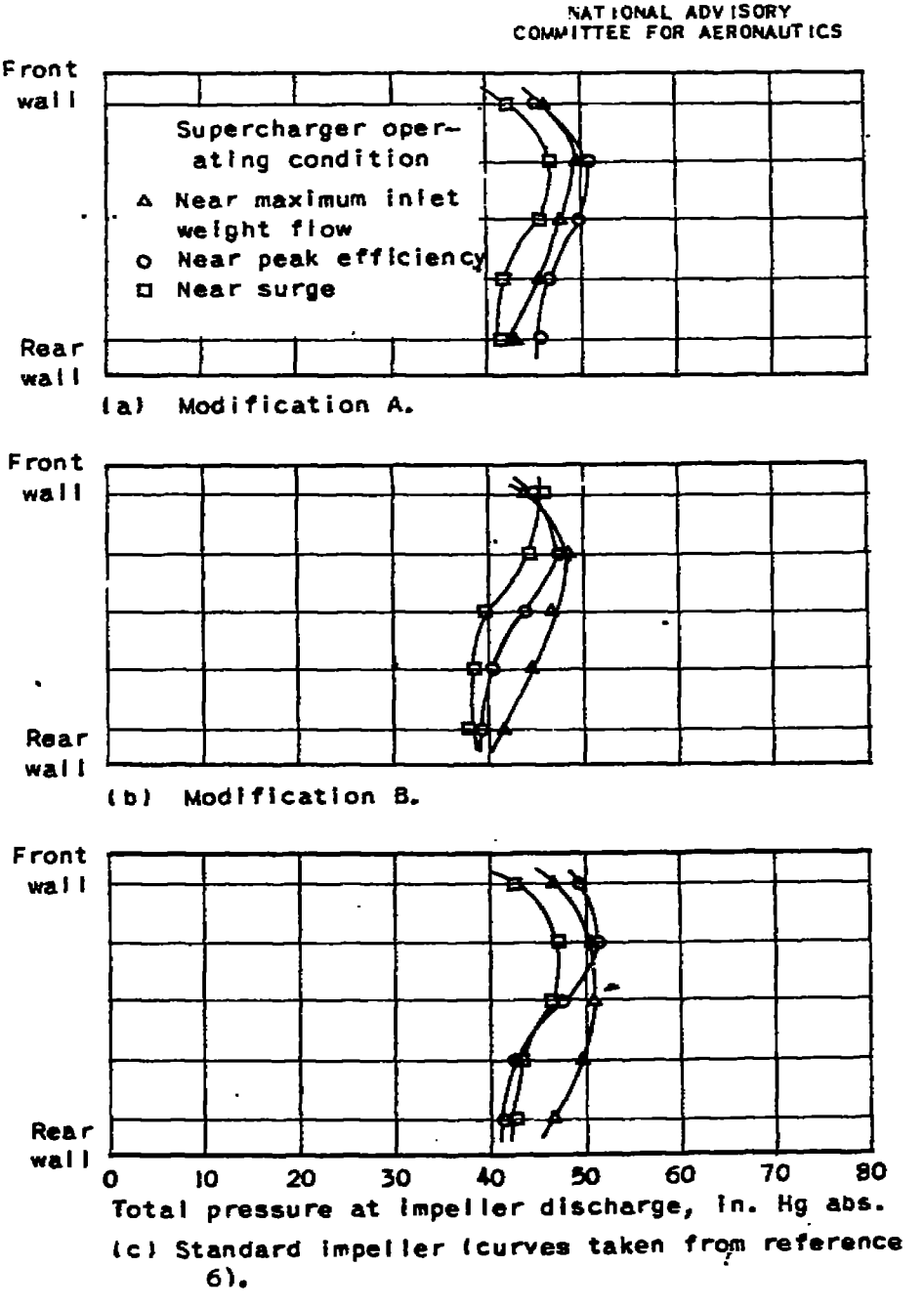

Figure 9. - Total-pressure profiles at impeller discharge for standard and modified V-1710-93 engine-stage impellers at actual tip speed of 1000 feet per second.

NASA Technical Library
3 1176 01435 0442

Author (2)
Flow - Impellers
Boundary layer - Impellers
Boundary layer removal - Impellers
Superchargers impellers
Air flow - Superchargers
Superchargers - Allen on V-1710-93
Boundary layer removal - Slot