CONFIDENTIAL

137
COPY NO.
RM No. E7G03

TECH LIBRARY KAFB, NM
0143462

NACA

RESEARCH MEMORANDUM

EXPERIMENTAL INVESTIGATION OF PERFORMANCE AND OPERATING CHARACTERISTICS OF A TAIL-PIPE BURNER FOR A TURBOJET ENGINE

By David S. Gabriel, E. Vincent Martinson
and Robert H. Essig

Flight Propulsion Research Laboratory
Cleveland, Ohio

CLASSIFIED DOCUMENT

[redacted] contains classified information [redacted] National Defense of the United States [redacted] meaning of the Espionage Act, USC [redacted] Its transmission or the revelation [redacted] in any manner to an unauthorized [redacted] prohibited by law. Information [redacted] may be imparted only to persons [redacted] and naval services of the United [redacted] Appropriate civilian officers and employees [redacted] Federal Government who have a [redacted] interest therein, and to United States citizens [redacted] loyalty and discretion who of necessity [redacted] informed thereof.

NATIONAL ADVISORY COMMITTEE
FOR AERONAUTICS

WASHINGTON
October 30, 1947

CONFIDENTIAL

TECH LIBRARY KAFB, NM
0143462

NATIONAL ADVISORY COMMITTEE FOR AERONAUTICS

RESEARCH MEMORANDUM

EXPERIMENTAL INVESTIGATION OF PERFORMANCE AND OPERATING CHARACTERISTICS OF A TAIL-PIPE BURNER FOR A TURBOJET ENGINE

By David S. Gabriel, E. Vincent Martinson
and Robert H. Essig

SUMMARY

An investigation has been conducted to obtain fundamental information required for the design of a satisfactory tail-pipe burner for augmenting the thrust of turbojet engines. The performance of 10 full-scale tail-pipe burners was investigated on a blower rig and a description and the operating characteristics of each are presented. Investigations were also conducted to determine the combustion and pressure-drop characteristics of the most satisfactory burner, to develop a method of controlling the burner-outlet temperature distribution, and to improve the burner ignition characteristics.

A tail-pipe burner was developed that operated satisfactorily over a range of fuel-air ratios with inlet conditions of gas temperature and velocity simulating those in a typical turbojet engine. The average burner-outlet temperature was limited to about 2110° F because of the limited air pressure drop available for burning. The performance of a similar tail-pipe burner, which incorporated the principles and design features developed, was investigated concurrently on a full-scale turbojet engine and operated satisfactorily up to nearly stoichiometric fuel-air ratio with an estimated outlet temperature of 3540° F.

INTRODUCTION

An investigation of various methods of thrust augmentation for turbojet engines to improve the performance of jet-propelled airplanes for take-off, climb, and combat conditions is being conducted at the NACA Cleveland laboratory. One method being investigated is the burning of additional fuel in the tail pipe of the engine in

order to obtain higher gas temperatures than can be tolerated by the turbine. These higher gas temperatures result in increased jet velocities and, consequently, increased thrust.

An analysis that develops the fundamental relations among the variables of the tail-pipe-burning cycle is given in reference 1. This analysis indicates that the amount of thrust augmentation produced by a tail-pipe burner is very sensitive to the pressure drop in the burner and that it is usually necessary to reduce the burner-inlet gas velocity in order to reduce these pressure losses; a reduction in burner-inlet velocity may also be necessary in order that stable combustion may be maintained.

The experimental development of a tail-pipe burner is primarily an investigation to obtain a satisfactory compromise between the requirements of providing turbulent low-velocity regions for flame seats and of holding the friction pressure losses to a minimum. An experimental program was therefore instituted to obtain fundamental information required for the design of a tail-pipe burner for thrust augmentation of turbojet engines.

For this investigation a full-scale blower rig, in which the turbine-discharge gas velocities and temperatures were simulated by means of a preheater and blowers, was used to avoid complication of an engine setup. The average burner-outlet temperature was limited to about 2110° F because of the limited air-pressure drop available for burning at the desired air flow.

The 10 various types of tail-pipe burner investigated and their operating characteristics are described. The results of extensive studies to determine the combustion performance and pressure-drop characteristics of the most satisfactory burner and the results of an investigation to control the burner-outlet temperature distribution and improve the ignition characteristics are also presented.

A concurrent experimental investigation conducted at sea-level conditions with zero ram on a turbojet engine with a tail-pipe burner, which was a modification of burners developed during the program reported herein, is reported in reference 2. Altitude-wind-tunnel investigations at various ram conditions of a turbojet engine using a different type burner are reported in reference 3.

INSTALLATION AND INSTRUMENTATION

Test setup. - A schematic diagram of the test setup, designed to simulate conditions in the TG-180 turbojet engine, is shown in

figure 1. Combustion air, supplied by a blower at a pressure of approximately 70 inches of water gage, was heated to about 1100° F by a preheater. The preheater was provided with an annular discharge section to simulate the turbine-discharge area of the engine. The hot gases then passed through an annular diffuser having an outlet-to-inlet area ratio of 1.5. This diffuser was formed by a central cone and an outer duct; the central cone was similar to the turbine-discharge cone of the engine except for slight modifications of the downstream tip. Following the diffuser was the tail-pipe burner section, which consisted of a straight length of pipe 6 feet long and $25\frac{3}{4}$ inches in diameter. The diffuser-area ratio, and hence the burner diameter, were chosen to provide a satisfactory compromise between pressure losses in the burner and the diffuser and an increase in size of the engine tail pipe based on the operating conditions of a TG-180 engine. The exhaust gases were subsequently discharged through a nozzle and a straight pipe section (containing water sprays for cooling the hot gases) into an outlet diffuser, which was used to decrease the burner-outlet pressure and thereby increase the available pressure drop across the burner.

Instrumentation. - Gas temperatures (up to 2400° F) were measured by triple-shielded chromel-alumel thermocouples, 16 each at the simulated turbine-discharge annulus (section A-A), the burner inlet (section B-B), and the burner outlet (section C-C), as shown in the sectional views of figure 1. The thermocouples at the burner inlet and outlet were so arranged in three concentric circles that both radial and circumferential temperature distribution could be determined. Burner-shell temperatures were measured along the duct by chromel-alumel thermocouples spot-welded to the outside wall. Temperatures were indicated on a self-balancing potentiometer.

Static pressures were measured at each of the three sections by means of four equally spaced static wall taps connected to a piezometer ring. Fuel flows and combustion-air flows were measured with a rotameter and a calibrated thin-plate orifice, respectively.

DESCRIPTION AND OPERATING CHARACTERISTICS OF VARIOUS TYPES OF TAIL-PIPE BURNER

A series of eight burner configurations were investigated on the blower rig during the initial research program and progressive changes in design were made to determine the most satisfactory burner. Two additional configurations were subsequently investigated in an effort to improve the performance of the most promising burner. For

the investigation of each burner, the preheater was first ignited and the simulated turbine-discharge temperature was set at about 1100° F. Various combinations of burner fuel-air ratios and inlet velocities were then tried until a method of igniting each burner had been found. The burners were then operated with increased fuel-air ratios and inlet-air velocities until a limiting condition such as extreme cycling, blow-out, hot spots, or limiting air-supply pressure occurred.

The fuel nozzles in all burners investigated were of an atomizing type and were flow-rated at an inlet fuel pressure of 100 pounds per square inch. In still air, these fuel nozzles produced a hollow-cone spray of finely atomized fuel at all fuel pressures greater than about 10 pounds per square inch. The fuel used during these runs was AN-F-22.

Each burner is designated by a number denoting its order in the process of development. A brief description of each burner investigated during the initial research program and its operating characteristics are presented.

Burner 1. - Burner 1 (fig. 2(a)) incorporated eight pivoted diffuser vanes that were installed in the annular turbine-discharge diffuser near the end of the turbine-discharge cone. These radial vanes were set parallel to the direction of air flow for the non-burning condition (to reduce drag) and adjacent vanes were rotated 10° toward each other to form four diffusing and four contracting sections for burning. A spray bar containing three 30-gallon-per-hour fuel nozzles, directed downstream, was located in each of the four diffusing sections. A spark plug was located in one of the diffusing sections 6 inches downstream of the spray bar. This burner was successfully ignited but burned with an extremely hot region along the bottom of the duct probably because of poor mixing of the air and the fuel.

Burner 2. - On burner 2 (fig. 2(b)) a pilot was installed in the tip of the turbine-discharge inner cone to provide a flame for igniting and maintaining combustion of the principal fuel supply. The end of the turbine inner cone was replaced with a vaporizing cone perforated around the base with 48 vapor escape holes of 0.081-inch diameter. Fuel for the vaporizing cone was supplied by a 37-gallon-per-hour fuel nozzle located inside the cone. The principal fuel for the burner was supplied by 12 fuel nozzles (30 gal/hr) submerged in streamline struts and arranged circumferentially around the outer wall of the turbine-discharge diffuser near the end of the turbine-discharge cone and directed toward the center line of the burner. The spray nozzles were arranged to protrude $2\frac{1}{2}$ inches into the air stream to

provide penetration of the fuel into the air stream. The fuel was introduced in this manner in order to mix well with the air and was expected to burn on contact with the flame from the pilot burner. Two spark plugs were located just downstream of the pilot vapor-escape holes for ignition of the pilot flame. The burner was successfully ignited but combustion was accompanied by violent cycling, which prevented the recording of performance data.

Burner 3. - In an attempt to provide more uniform fuel distribution and better mixing of the fuel and air in burner 3 (fig. 2(c)), alternate spray nozzles of burner 2 were replaced by spray bars extending across the annulus, each spray bar containing three 10.5-gallon-per-hour fuel nozzles directed downstream. This modified burner also cycled at all attempted operating conditions, although the cycling was not as violent as that of the previous burner. The combustion efficiency was about 35 percent indicating that most of the fuel failed to burn.

Burner 4. - In order to improve further mixing of the fuel and air in burner 4 (fig. 2(d)), the spray nozzles and bars (24 fuel-spray nozzles) were removed from the outlet end of the turbine-discharge diffuser and 20 nozzles (21.5 gal/hr) were installed circumferentially around the inner wall at the inlet to the annular turbine-discharge diffuser. The nozzle tips extended about 1/8 inch into the air stream perpendicular to the surface of the turbine-discharge inner cone. The pilot and spark plugs were unchanged. Stable combustion up to a fuel-air ratio of 0.010 and a maximum average temperature rise of about 500° F were obtained. Violent cycling was encountered, however, during operation at fuel-air ratios greater than 0.010. The combustion efficiency was about 80 percent for the range of operating conditions. The fuel flow varied erratically throughout the runs because of partial vaporization of the fuel in the supply lines and the fuel nozzles inside the burner. Observation of the combustion during operation through a quartz sight glass revealed that most of the fuel was blown along the surface of the turbine-discharge inner cone by the air stream and then burned in the wake of the turbine-discharge inner cone.

Burner 5. - An attempt to eliminate cycling was made in burner 5 (fig. 2(e)) by changing the pilot from a vaporizing type to a direct spray-injection type and by changing the location of the main fuel nozzles. The revised pilot consisted of a cylindrically shaped opening at the tip of the turbine-discharge cone within which was installed a 37-gallon-per-hour fuel nozzle. The only change to the shape of the turbine-discharge cone was to cut off the downstream tip, which had formed the vaporizing cone. The principal fuel supply was provided by a ring of 30 fuel nozzles (10.5 gal/hr) arranged around the outer wall of the turbine-discharge annulus and directed

toward the burner center line. Each nozzle projected into the gas stream about 2 inches and was individually connected to an exterior fuel-supply manifold. A spark plug was located 3 inches downstream of the turbine-discharge cone. The burner was successfully ignited but cycling was so violent that testing had to be discontinued.

Burner 6. - In a further effort to eliminate cycling, a circular flame holder was installed in burner 6 (fig. 2(f)) $5\frac{3}{4}$ inches downstream of the end of the turbine-discharge cone to provide a seat for the flame. The flame holder was semitoroidal, consisting of one-half of a 2-inch diameter tube rolled into a 15-inch diameter ring with an annular flat plate welded to the open side. It was installed with the flat side facing downstream and supported by four 1-inch diameter tubular struts connected to the burner wall. Two spark plugs located 3 inches downstream of the flame holder were used in addition to the one used for the pilot. Although no cycling occurred for burner 6 over a wide range of fuel-air ratios, the combustion efficiency was only 25 to 30 percent.

Observation of the combustion showed no flame seated upon the flame holder. It was concluded that the fuel introduced upstream of the flame holder either failed to reach the flame holder at all or that the local fuel-air ratio in the region of the sheltered zone was too lean for ignition.

Burner 7. - The fuel nozzles were removed from the turbine-discharge annulus and replaced in burner 7 (fig. 2(g)) by a ring of 30 nozzles (10.5 gal/hr) directed upstream and mounted on a 15-inch diameter fuel manifold (equal in diameter to the flame holder) located about 4 inches upstream of the end of the turbine-discharge cone. The flame holder was relocated about 18 inches downstream of the end of the turbine-discharge inner cone. Two short spark plugs were installed in addition to the spark plug for the pilot burner. One spark plug was located 3 inches downstream and the other 9 inches upstream of the flame holder. Observation of the flame showed good combustion with a flame seated upon the downstream face of the flame holder. Fuel vaporization in the fuel manifold and nozzles, however, limited fuel flow to very low rates with attendant erratic surges. This prevaporization also occurred with the fuel-spray nozzles directed downstream. The observed good combustion was considered to be confirmation that the richer fuel-air mixture in the flame-holder sheltered region improved combustion over that of burner 6.

Burner 8. - In order to eliminate prevaporization of the fuel in the manifold, the fuel-nozzle manifold ring was replaced in burner 8 (fig. 2(h)) by 12 fuel nozzles (30 gal/hr) arranged in a

15-inch diameter circle and individually connected to an exterior fuel manifold. The fuel nozzles were directed downstream and the flame holder was located about 10 inches downstream of the nozzle tips. Two short spark plugs were used in addition to the spark plug for the pilot burner, one located $1\frac{1}{2}$ inches downstream of the fuel-spray-nozzle tips and one located 3 inches downstream of the flame holder. This burner maintained steady combustion over the entire range of operating conditions. A preliminary investigation indicated high temperature rise and good combustion efficiencies. Visual observation of the burning revealed a steady flame seated upon the downstream face of the flame holder. These results indicated that burner 8 was a promising configuration and a more extensive test program was conducted to investigate its performance.

Summary of burner operating characteristics. - The following table briefly summarizes the general results of the initial development program for the various burner configurations:

Burner	Maximum combustion efficiency (percent)	Maximum temperature rise (°F)	Remarks
1	-------	-------	Extreme hot region along bottom of burner prevented taking data
2	-------	-------	Violent cycling prevented taking data
3	35	160	Cycling less pronounced than in burner 2
4	80	504	Cycling encountered at temperature rise of 500° F prevented further testing at higher temperature rises
5	-------	-------	Violent cycling prevented taking data; no flame seated upon flame holder
6	25	140	Combustion downstream of pilot but no flame seated upon flame holder
7	-------	-------	Good flame seated on flame holder but prevaporization of fuel limited fuel flow and caused erratic surges in fuel flow
8	(a)	(a)	Good flame seated upon flame holder; combustion and fuel flow steady

[a]Performance given in subsequent sections.

PROCEDURE

Investigations were made of the combustion characteristics of burner 8 with AN-F-22 and kerosene fuels. Ignition characteristics of this burner were investigated with two spark-plug configurations. Modifications to improve the outlet temperature distribution were made to burner 8 to form burners 9 and 10.

Combustion studies of burner 8 with gasoline. - The performance of burner 8 was extensively investigated to determine the friction-pressure-drop losses and combustion characteristics. Because of blower limitations, air flows and pressures typical of a TG-180 turbojet engine at maximum rated speed at sea level (about 73 lb/sec and $26\frac{1}{2}$ lb/sq in. absolute, respectively) could not be obtained at the turbine-discharge section of the test setup. Typical turbine-discharge gas velocity (650 ft/sec) and temperature (1100° F) were, however, simulated with an air flow of 40 pounds per second at a pressure of about 15.5 pounds per square inch absolute. These conditions correspond to various combinations of operating conditions of a TG-180 engine one of which is an altitude of 30,000 feet, rated speed, and a ram-pressure ratio of 1.7.

The friction-pressure drop was measured for the condition of no burning in the tail pipe (isothermal condition) over a range of burner-inlet gas velocities from 320 to 440 feet per second and inlet-gas temperatures from 550° to 1100° F.

Combustion characteristics of the burner were determined over the following range of conditions:

Air flow (lb/sec)	Simulated turbine-discharge axial velocity (ft/sec)	Burner-inlet gas velocity (ft/sec)	Burner-inlet gas temperature (°F)	Burner fuel-air ratio
30	480	320	1100	0.0044-0.013
35	560	370	1100	.0044- .013
40	650	440	1100	.0044- .015

Most of the runs were made at a burner-inlet gas velocity of 440 feet per second.

Because burning fuel in the tail-pipe burner caused a pressure drop, it was therefore necessary to increase the inlet pressure as the

fuel-air ratio was increased. The blower characteristics at the desired air flow (40 lb/sec) limited the pressure rise, and hence the fuel-air ratio, to the values listed in the previous table.

For the combustion studies of the tail-pipe burner, the preheater was ignited at a low air flow (20 to 25 lb/sec) and, after conditions had stabilized, the tail-pipe burner was ignited. The air flow was then increased to the desired value and the preheater fuel flow adjusted to provide an outlet temperature of 1100° F. With these conditions held constant, the tail-pipe-burner fuel-air ratio was set at the desired value and data readings were taken after equilibrium was established.

Combustion studies of burner 8 with kerosene. - Because turbojet engines normally use kerosene for the main engine fuel, it was considered desirable to investigate the performance of burner 8 using JP-1 fuel. A series of runs were made at various fuel-air ratios from 0.008 to 0.014 and inlet-air velocities from 350 to 440 feet per second using kerosene (JP-1) fuel. The general procedure was the same as that previously discussed for the combustion studies of burner 8. For this investigation both 30-gallon-per-hour and 21.5-gallon-per-hour fuel nozzles were used. The 21.5-gallon-per-hour nozzles were used in the fuel ring downstream of the inner cone for all subsequent investigations.

Investigation of ignition characteristics of burner 8. - An effective tail-pipe burner for augmenting the thrust of military aircraft must be capable of ignition with little time delay at the conditions of inlet velocity and temperature imposed upon the burner by the engine operating at maximum speed. Burner 8 was therefore investigated to determine the time required to ignite the burner at an inlet temperature of about 1100° F and with an inlet gas velocity of 400 feet per second. The runs were made with both two and five spark plugs located 3 inches downstream of the flame holder and with the electrodes extending within $7\frac{1}{2}$ inches of the burner center line. The spark plug for the pilot burner was in the location shown in figure 2(h) and remained unchanged throughout the tests. Ignition time lag, defined as the elapsed time from the opening of a fuel valve located at the inlet of the fuel manifold (fig. 2(h)) until steady combustion was established, was determined for the range of fuel-air ratio from 0.007 to 0.014. JP-1 fuel was used during these runs.

Improvement in temperature distribution at burner outlet; burner 9. - The gas temperatures at the center of the outlet of burner 8 were lower than the average outlet temperature and therefore

an attempt was made to improve the temperature distribution. Because burner 4 provided higher temperatures in the center of the burner duct, a modification of this burner was added to burner 8 to form burner 9. Four 40-gallon-per-hour fuel-spray nozzles were installed around the turbine-discharge inner cone approximately 1 foot upstream of the tip. Three arrangements of the group of four nozzles (hereinafter called the inner fuel nozzles) were investigated: (1) The nozzles were directed downstream and parallel to the burner center line; (2) the nozzles were directed inward at an angle of 90° to the burner center line; and (3) the nozzles were directed downstream and inward at an angle of 45° to the burner center line. A sketch of burner 9 with the final nozzle arrangement is shown in figure 3. With the fuel nozzles in each position, a series of runs was made for a burner-inlet gas temperature of about 1000° F and a burner-inlet gas velocity of 400 feet per second. The runs were made at various fuel-air ratios from 0.008 to 0.016 with the fuel flow to the inside fuel ring varying from 0 to 60 percent of the total fuel flow to the tail-pipe burner. JP-1 fuel was used during these runs.

Improvement in operating range; burner 10. - In order to increase the operating range of burner 9, a small perforated basket was added to the tip of the turbine-discharge inner cone to form burner 10 (fig. 4) and additional runs were made over a range of fuel-air ratios at an inlet-air velocity of 400 feet per second. The fuel-nozzle arrangement was unchanged. The fuel used during the runs was JP-1.

PERFORMANCE OF TAIL-PIPE BURNERS 8 TO 10

Symbols

The following symbols are used in this report:

f/a fuel-air ratio for tail-pipe burner

q_B burner-inlet velocity pressure, (lb)/(sq ft)

T total temperature, (°F)

Δp_f friction-static-pressure drop, (lb)/(sq ft)

Δp_m momentum-pressure drop equal to measured static-pressure drop between stations B-B and C-C minus friction-pressure drop, (lb)/(sq ft)

ρ density, (slug)/(cu ft)

Subscripts:

B burner inlet (fig. 1)

C burner outlet (fig. 1)

Burner 8

Combustion studies with gasoline. - The variation of tail-pipe-burner temperature rise with fuel-air ratio for burner 8 at several inlet gas velocities is shown in figure 5. The dashed line is the theoretical temperature rise obtained from the charts of reference 4. In the calculation of theoretical temperature rise, the gas at the burner inlet was assumed to have the properties of air at the burner-inlet temperature. Because the preheater efficiency was very high, no correction to the tail-pipe burner fuel-air ratio was made for unburned fuel from the preheater. The measured temperature rises are approximately equal to the theoretical values except for an experimental scatter of about 10 percent. The values of temperature rise plotted in figure 5 may not be representative of the true average temperature rise because the readings of only 16 thermocouples in an irregular temperature field at the burner outlet (fig. 1, section C-C) were averaged to obtain these temperatures and also because of the errors attendant with measuring high gas temperatures with thermocouples immersed in a flame.

At high fuel-air ratios, a few of the thermocouples at the burner outlet indicated temperatures in excess of 2400° F (the limit of the potentiometer scale). Values for these temperatures were obtained by plotting the thermocouple reading at lower values of outlet temperature against the fuel-air ratio and extrapolating the curve to temperatures above 2400° F. Because the errors in temperature measurement are believed to be small compared to the temperature rise, the close agreement of the measured average temperature rise with the theoretical temperature rise indicates that the burner efficiency is high.

Because of the limited pressure available from the blower, the investigation was limited to a burner temperature rise of 1010° F, corresponding to a burner-outlet temperature of 2110° F. This temperature rise was obtained for a fuel-air ratio of 0.015 at a burner-inlet gas velocity of 440 feet per second. Stable and satisfactory combustion was maintained over the entire range of operating conditions. The range of operation of a similar tail-pipe burner was more completely investigated on the engine setup of reference 2. The burner used for the investigation of reference 2

was essentially a combination of burners 4 and 8 and is illustrated in figure 6. Runs were made with this burner at rated engine speed with zero ram, sea-level inlet conditions up to a nearly stoichiometric fuel-air ratio of 0.043, and an estimated burner-outlet temperature of 3540° F; stable and efficient combustion was obtained throughout the range of operation. The tail-pipe-burner inlet pressure for this engine investigation was about 26 pounds per square inch absolute as compared to about 15.5 pounds per square inch for the runs in the blower rig.

A typical outlet-temperature-distribution curve for burner 8 is shown in figure 7, (inlet gas velocity, 440 ft/sec; fuel-air ratio, 0.0089). The numerical average outlet temperature (1700° F) is indicated by the dashed line. The radial temperature variation is approximately 600° F with the highest temperatures occurring near the flame-holder radius ($7\frac{1}{2}$ in.) and the lower temperatures near the center and walls of the burner. The cool layer of air near the walls of the burner was considered to be desirable for simplicity and lightness, because the necessity for external cooling of the burner walls was eliminated. Some sacrifice in thrust augmentation must be made at fuel-air ratios near stoichiometric, however, because of the unburned portion of the air.

The isothermal friction-pressure-drop coefficient, which is defined as the ratio $\Delta p_f/q_B$, is plotted against burner-inlet velocity pressure q_B in figure 8 for various inlet-gas temperatures. The friction-pressure-drop coefficient has a constant value of 0.33 over the entire range of experimental conditions.

The ratio of the momentum-pressure drop to the inlet velocity pressure $\Delta p_m/q_B$ is plotted against the ratio of inlet to outlet gas density for various burner-inlet gas velocities in figure 9. It is apparent that the measured momentum-pressure drop is less than the theoretical pressure drop shown by the dashed line.

The measured momentum-pressure drop and the fundamental equation for ideal momentum-pressure drop may be used to calculate a burner temperature rise. The ratio of the calculated temperature rise to the theoretical temperature rise corresponding to the measured fuel-air ratio is a combustion efficiency. A calculation of this combustion efficiency from the data of figure 9 resulted in a value of approximately 80 percent. Because the average measured temperature rise (fig. 5) is probably high due to the arrangement of the small number of thermocouples in the irregular temperature field at the burner outlet, the combustion efficiency of about 100 percent obtained from the measured temperatures is probably higher than the

true value. The true value of combustion efficiency probably lies between the values obtained from the momentum-pressure-drop data and from the temperature-rise data, or between 80 and 100 percent.

Combustion studies with kerosene. - When burner 8 was operated with kerosene (JP-1) and the 30-gallon-per-hour fuel nozzles, ignition was very difficult and required considerable manipulation of the fuel and air flow. Ignition occurred more easily and quickly, however, when the 30-gallon-per-hour fuel nozzles were replaced with 21.5-gallon-per-hour nozzles. This difference in ignition characteristics was attributed to improved atomization of the kerosene by the attendant higher fuel pressures required for the same fuel flows.

A comparison of the results of the combustion studies of burner 8 using AN-F-22 fuel and 30-gallon-per-hour fuel nozzles with the results of the combustion studies of the same burner using 21.5 gallon-per-hour fuel nozzles and JP-1 fuel revealed no significant difference in combustion efficiency nor stability.

Ignition characteristics. - The results of the ignition tests of burner 8 are shown in figure 10 in which the ignition time lag is plotted as a function of fuel-air ratio for two spark-plug configurations. Although the fuel flow could be set at the desired value almost instantaneously, a short time interval, which is included in the ignition time lag, is required for the fuel to fill the manifold and for pressure to build up in the fuel nozzle. Because this interval will probably also be necessary in an aircraft application, the present results are representative of the ignition time expected for an actual engine installation. The ignition time lag decreased as the fuel-air ratio increased and when five spark plugs were used it reached a value of about 4 seconds at a fuel-air ratio of 0.0125. When the number of spark plugs was decreased from five to two the ignition time lag increased about 9 seconds.

Runs made with both continuous spark and with the spark used only for starting indicated that no effect on combustion resulted from turning off the spark after ignition.

Burner 9

No improvement in temperature distribution over that of burner 8 was obtained when the fuel nozzles were directed either parallel or at an angle of 90° to the burner center line. The results of the runs with the fuel nozzles directed downstream at 45° to the burner center line showed a considerable increase in the temperatures at the

center of the burner. Visual observation through a sight glass showed that the fuel burned in the turbulent wake of the turbine-discharge cone, which acted as a flame holder in the center of the burner. The radial temperature gradients obtained for various percentages of the total fuel flow to the inner fuel nozzles are shown in figure 11. In this figure, the ratio of the average outlet gas temperature at a constant radius to the average inlet-gas temperature is plotted against the distance of the thermocouple rings from the burner center line. These curves show that the temperature distribution can be controlled by varying the proportion of the total fuel flow injected through the inner fuel nozzles. With all the fuel going to the outer nozzles, a distribution similar to that of figure 7 is obtained and as the proportion of fuel to the inner nozzles is increased, the temperatures at the center of the burner increase. With about one-third of the fuel being injected through the inner nozzles, the temperatures at the center of the burner are about equal to those at the flame-holder radius. For each condition shown, the temperatures near the wall of the duct remained relatively low compared to the interior gas temperatures, thus eliminating the need for external cooling of the burner shell.

Although the arrangement of fuel-injection nozzles and the sheltered flame-holder regions permitted control of the temperature distribution at the burner outlet, the range of control was limited by blow-out of the flame from the fuel injected through the inner fuel nozzles. In repeated attempts to operate with an over-all fuel-air ratio of 0.010, an inlet gas velocity of about 400 feet per second and, an inlet temperature of about 1000° F, the flame from the inner fuel nozzles blew out when the fuel flowing to the inner fuel nozzles was increased to 60 percent of the total fuel quantity.

Burner 10

By the addition of the perforated basket in burner 10, it was possible to increase the percentage of fuel flow to the inner fuel ring to about 65 percent with a total over-all fuel-air ratio of 0.010 and an inlet gas velocity of about 400 feet per second before blow-out occurred. No changes in combustion efficiency based on the measured temperature rise between burners 9 and 10 could be detected within the accuracy of the data. The temperature distribution at the burner outlet was the same as that of burner 9.

The results of the investigation of reference 2 indicated that approximately the same limitations in percentage of total fuel flow to the inner fuel-nozzle ring existed at a fuel-air ratio of 0.043. Although the fuel nozzles installed in the inner cone near the turbine

discharge are on a larger diameter than those arranged downstream of the inner cone, they are considered to be the inner fuel-nozzle ring because the fuel injected from them remained near the surface of the inner cone and burned in the center of the duct.

SUMMARY OF RESULTS

An investigation on a full-scale blower rig of 10 tail-pipe burners has resulted in the design of a tail-pipe burner that incorporates a simple semitoroidal flame holder and atomizing type fuel nozzles so arranged that they provide rich fuel-air ratios in the sheltered flame-holder zones. Combustion studies of this burner showed that stable combustion with a high combustion efficiency (80 percent or more) is obtained at an inlet velocity of 440 feet per second, a nominal inlet pressure of 15.5 pounds per square inch, and an inlet gas temperature of 1100° F over a range of fuel-air ratios from 0.0044 to 0.015.

The isothermal friction-pressure-drop coefficient, defined as the ratio of friction pressure drop to inlet velocity pressure, was 0.33. The runs on the blower rig were limited to a burner-inlet gas temperature of 2110° F by the pressure of the available air supply; the performance of a similar type burner, which incorporated the principles and design features developed herein, was, however, concurrently investigated on a full-scale turbojet engine up to nearly stoichiometric fuel-air ratio (an estimated outlet temperature of 3540° F) with stable combustion over the entire range. The gas temperatures near the walls of the burner were relatively low, which eliminated the necessity for external cooling of the burner shell. The temperature distribution at the burner outlet could be controlled by appropriate grouping of the fuel nozzles and flame-holder-sheltered zones and by varying the percentage of fuel injected in the various sheltered zones.

The burner combustion characteristics over the limited range investigated were the same for kerosene and gasoline. Tests with various numbers of spark plugs located downstream of the flame holder showed that ignition could be accomplished at a burner-inlet velocity of 400 feet per second and an inlet temperature of 1100° F. The ignition time lag, defined as the length of time required from the opening of a fuel valve until combustion had been established,

decreased as both the fuel-air ratio and the number of spark plugs was increased and, when five spark plugs were used, reached a value of about 4 seconds at a fuel-air ratio of 0.0125.

Flight Propulsion Research Laboratory,
National Advisory Committee for Aeronautics,
Cleveland, Ohio.

REFERENCES

1. Bohanon, H. R., and Wilcox, E. C.: Theoretical Investigation of Thrust Augmentation of Turbojet Engines by Tail-Pipe Burning. NACA RM No. E6L02, 1947.

2. Lundin, Bruce T., Dowman, Harry W., and Gabriel, David S.: Experimental Investigation of Thrust Augmentation of a Turbojet Engine at Zero Ram by Means of Tail-pipe Burning. NACA RM No. E6J21, 1946.

3. Fleming, W. A., and Dietz, R. O.: Altitude-Wind-Tunnel Investigations of Thrust Augmentation of a Turbojet Engine. I - Performance with Tail-Pipe Burning. NACA RM No. E6I20, 1946.

4. Turner, L. Richard, and Lord, Albert M.: Thermodynamic Charts for the Computation of Combustion and Mixture Temperatures at Constant Pressure. NACA TN No. 1086, 1946.

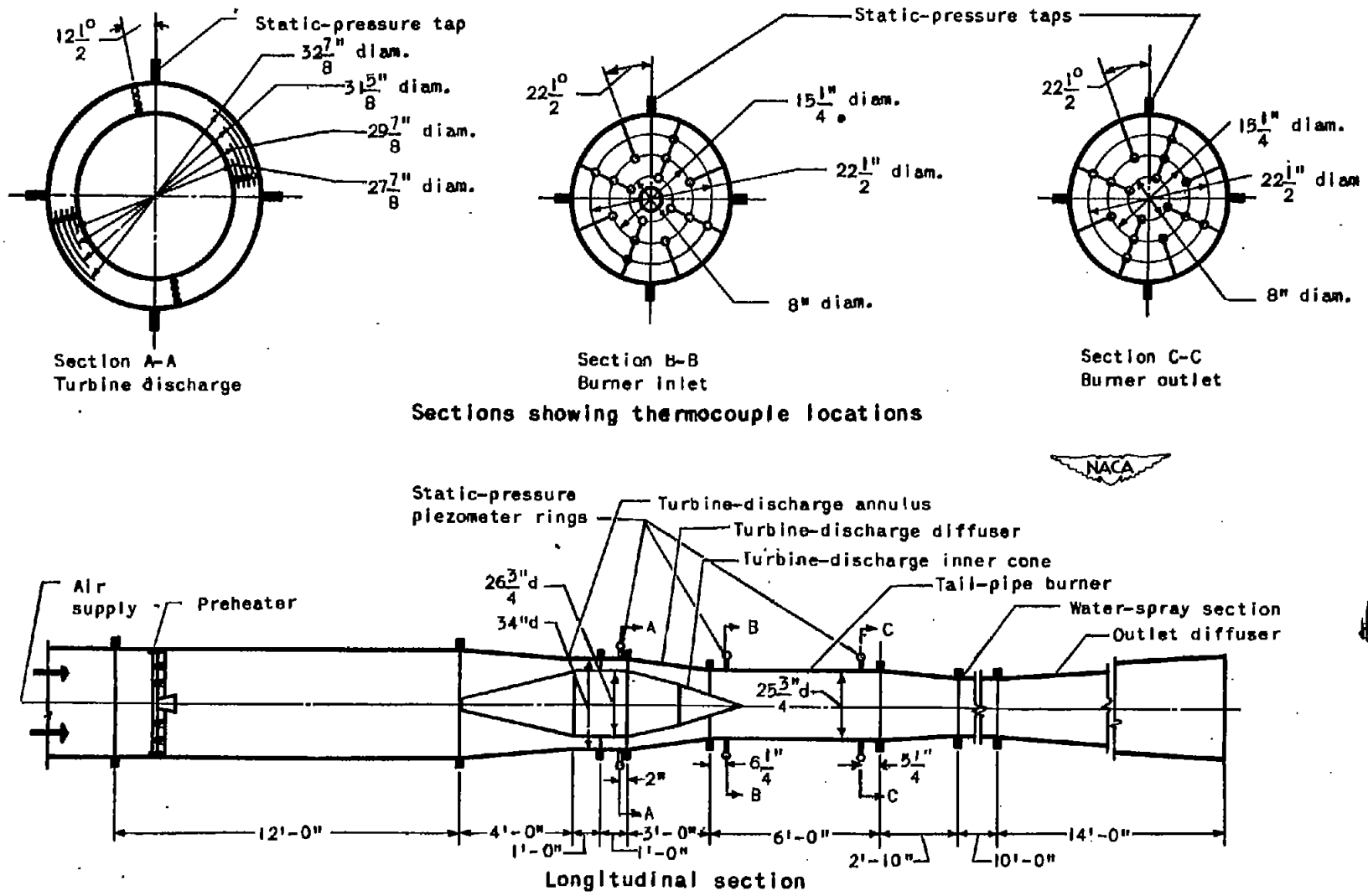

Figure 1. - Schematic diagram of setup for tail-pipe-burner investigations.

CONFIDENTIAL

CONFIDENTIAL

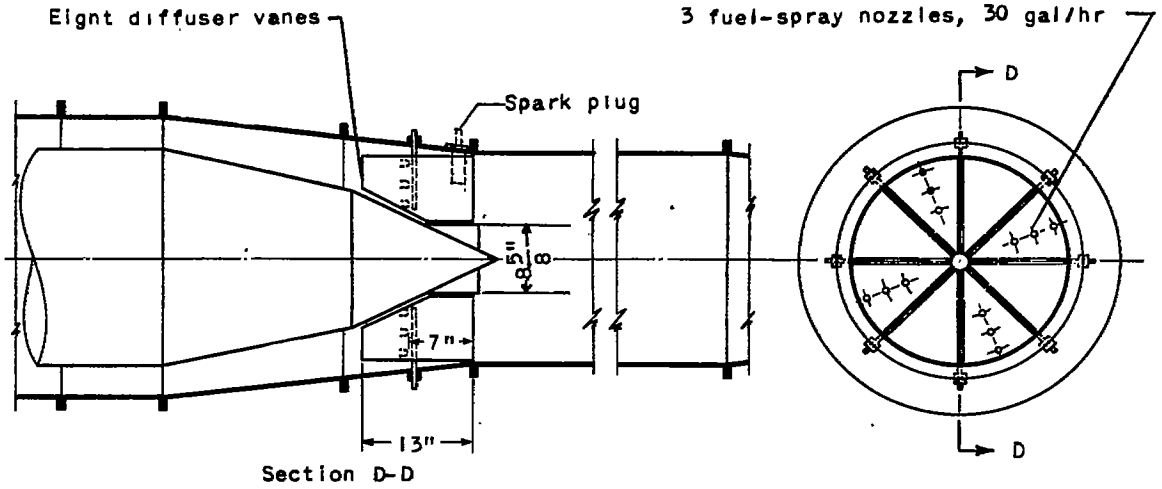

(a) Burner 1.

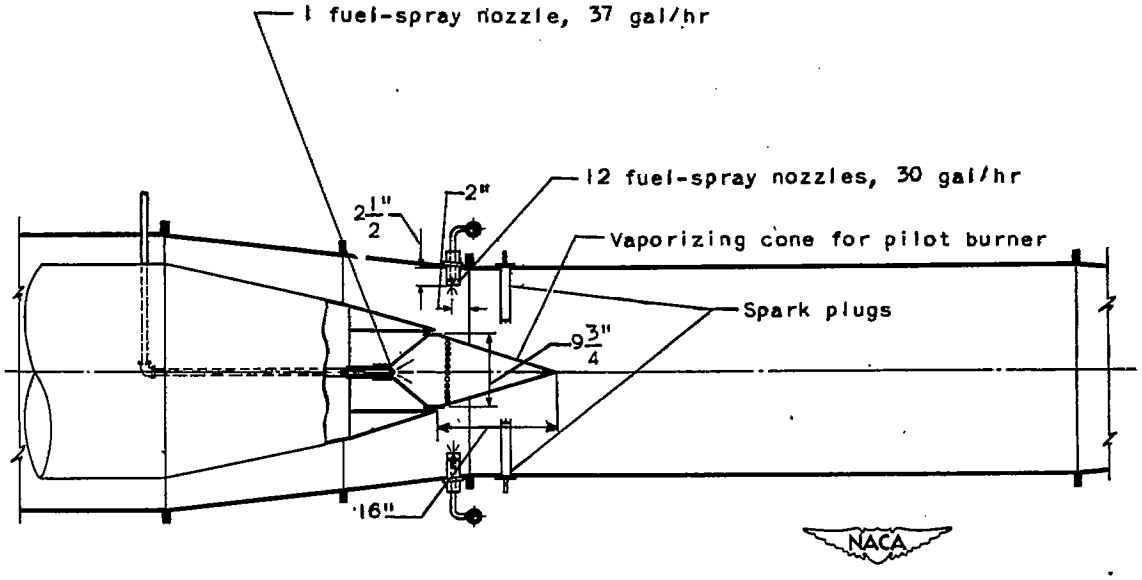

(b) Burner 2.

Figure 2. - Schematic diagrams of burner configurations 1 to 8.

294+846+845

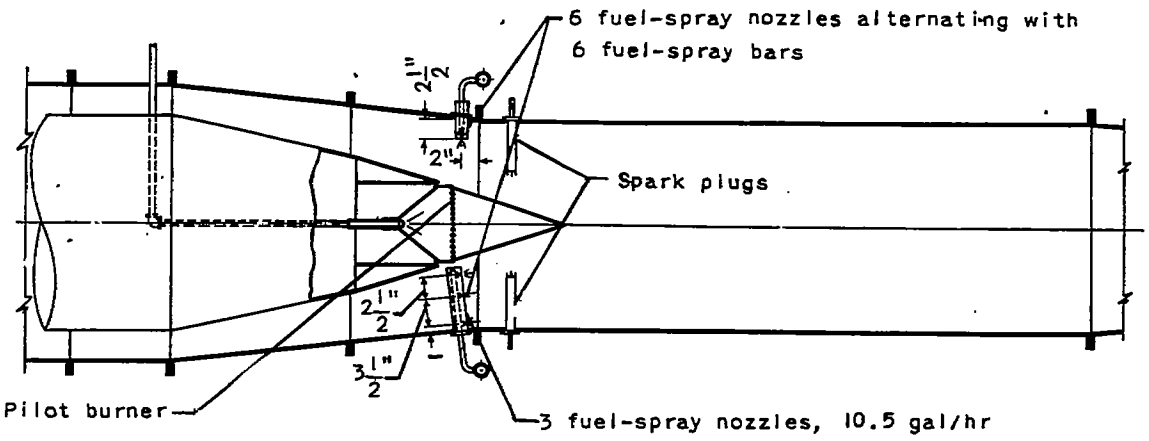

(c) Burner 3.

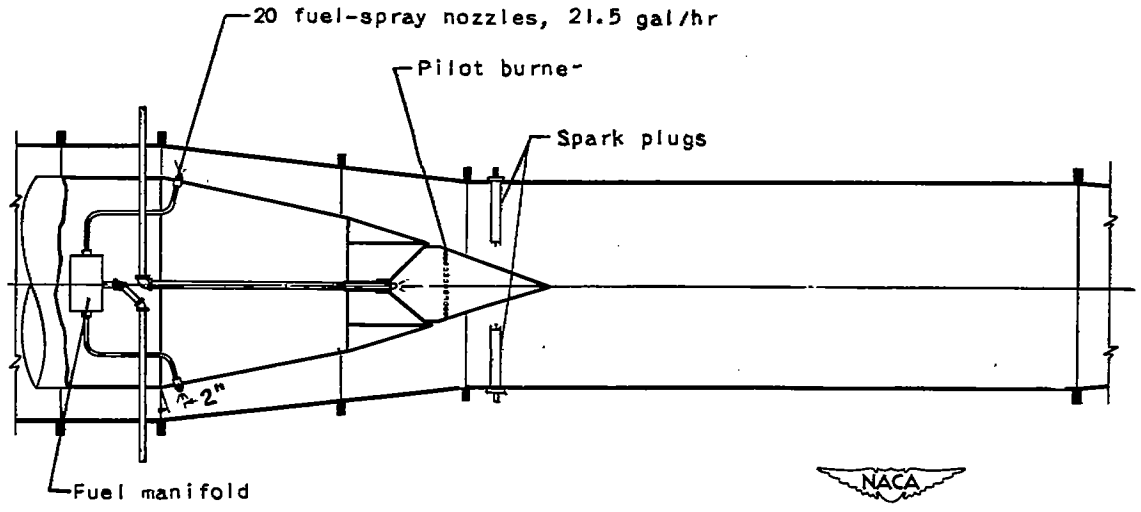

(d) Burner 4.

Figure 2. - Continued. Schematic diagrams of burner configurations 1 to 8.

294+847+846

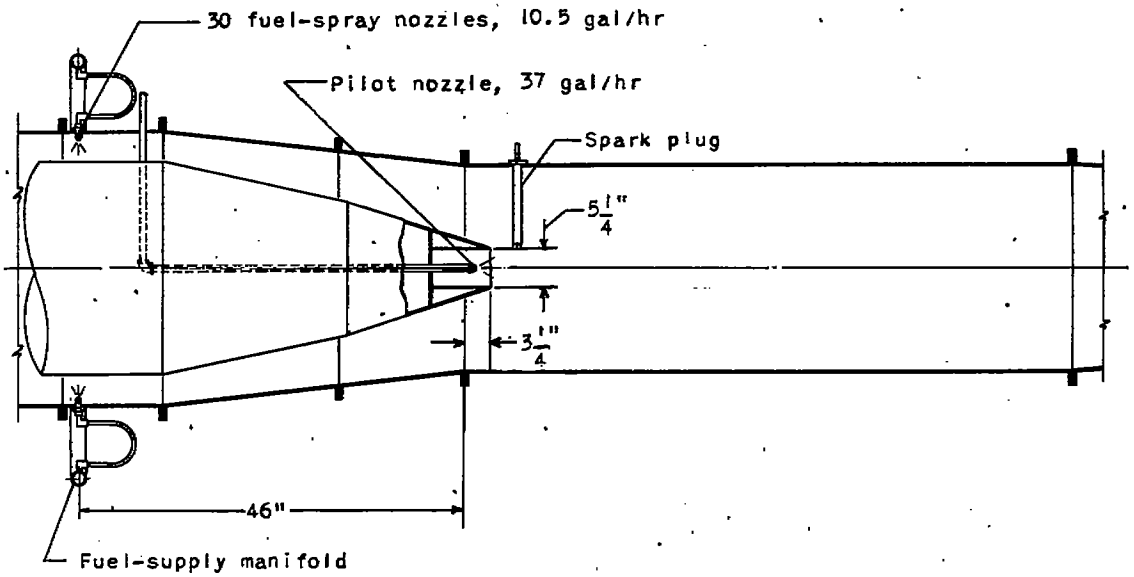

(e) Burner 5.

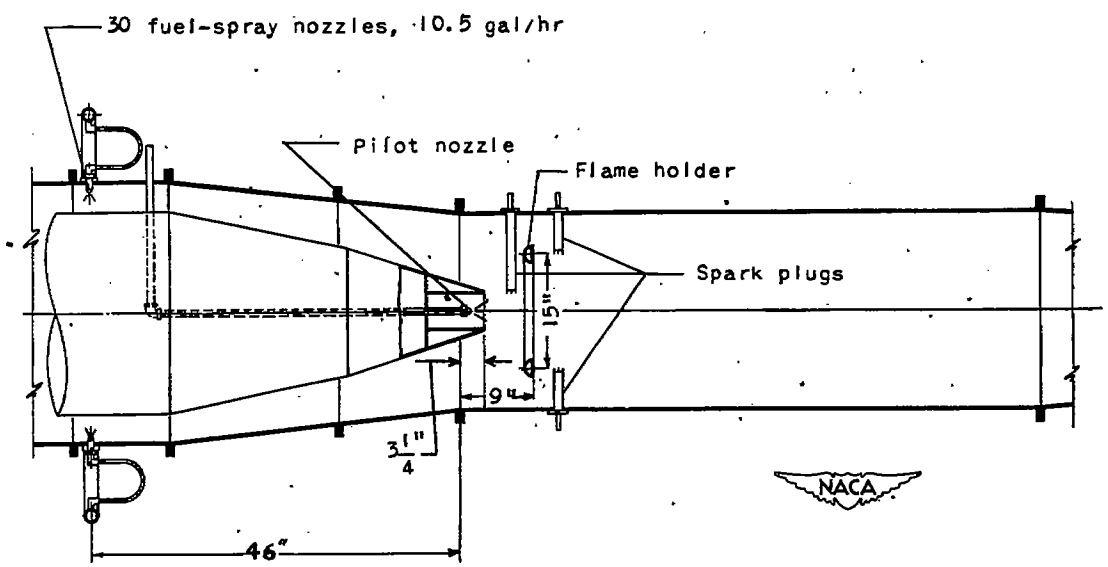

(f) Burner 6.

Figure 2. - Continued. Schematic diagrams of burner configurations 1 to 8.

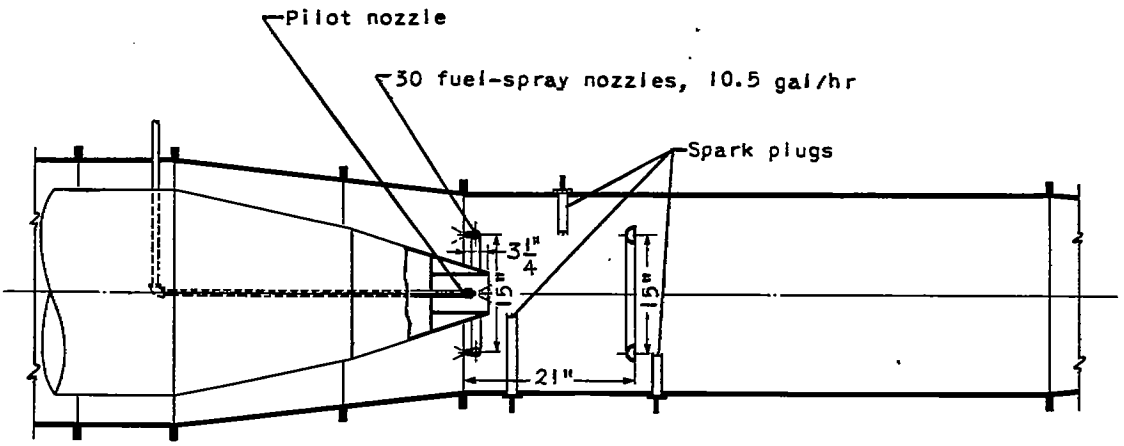

(g) Burner 7.

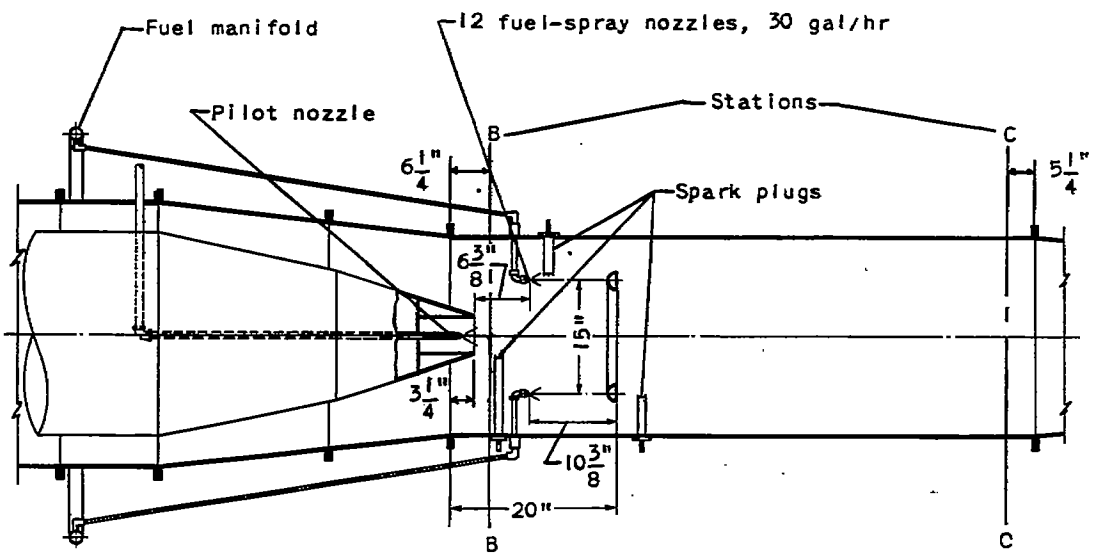

(h) Burner 8.

Figure 2. - Concluded. Schematic diagrams of burner configurations 1 to 8.

2948+949+948

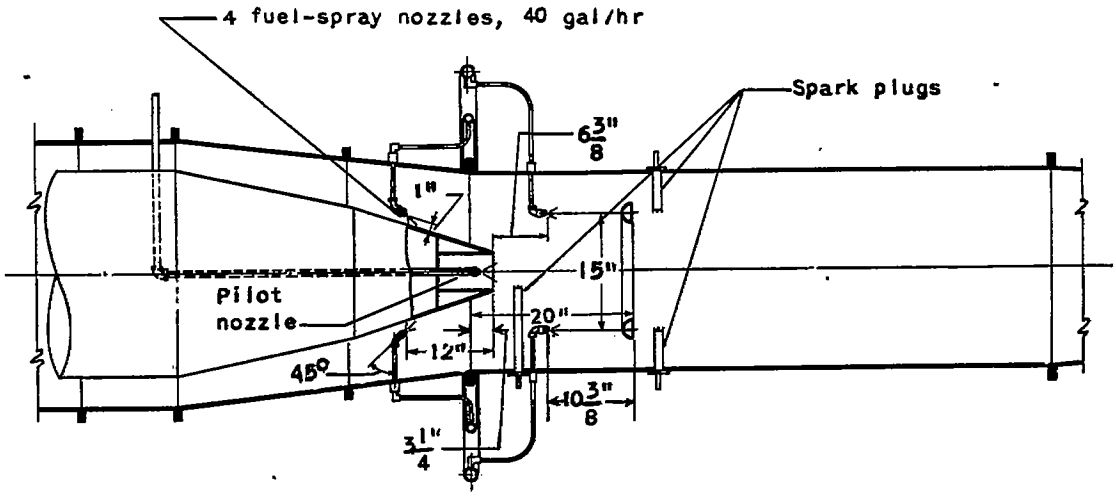

Figure 3. - Burner 9 incorporating fuel-spray nozzles around turbine-discharge inner cone.

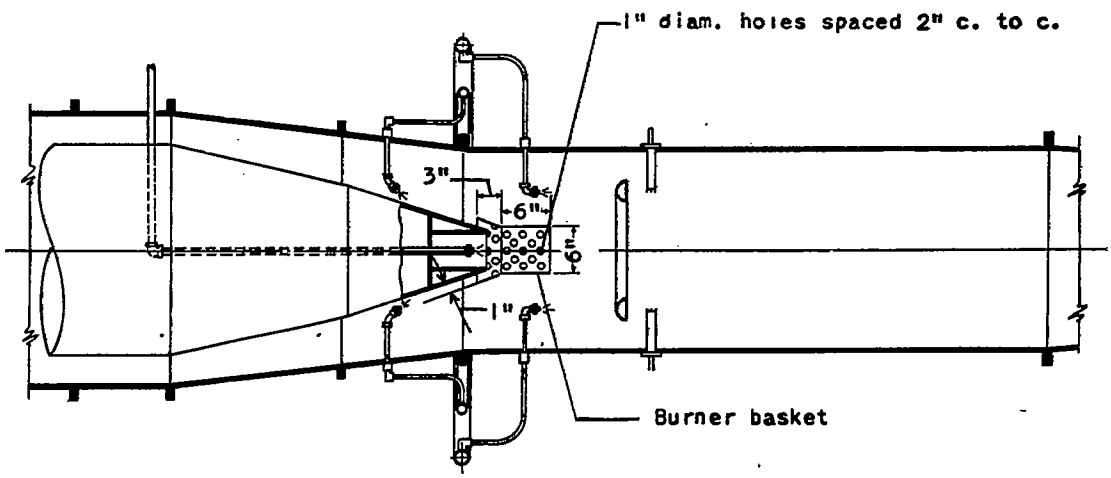

Figure 4. - Sketch of burner 10 showing perforated basket for inner cone.

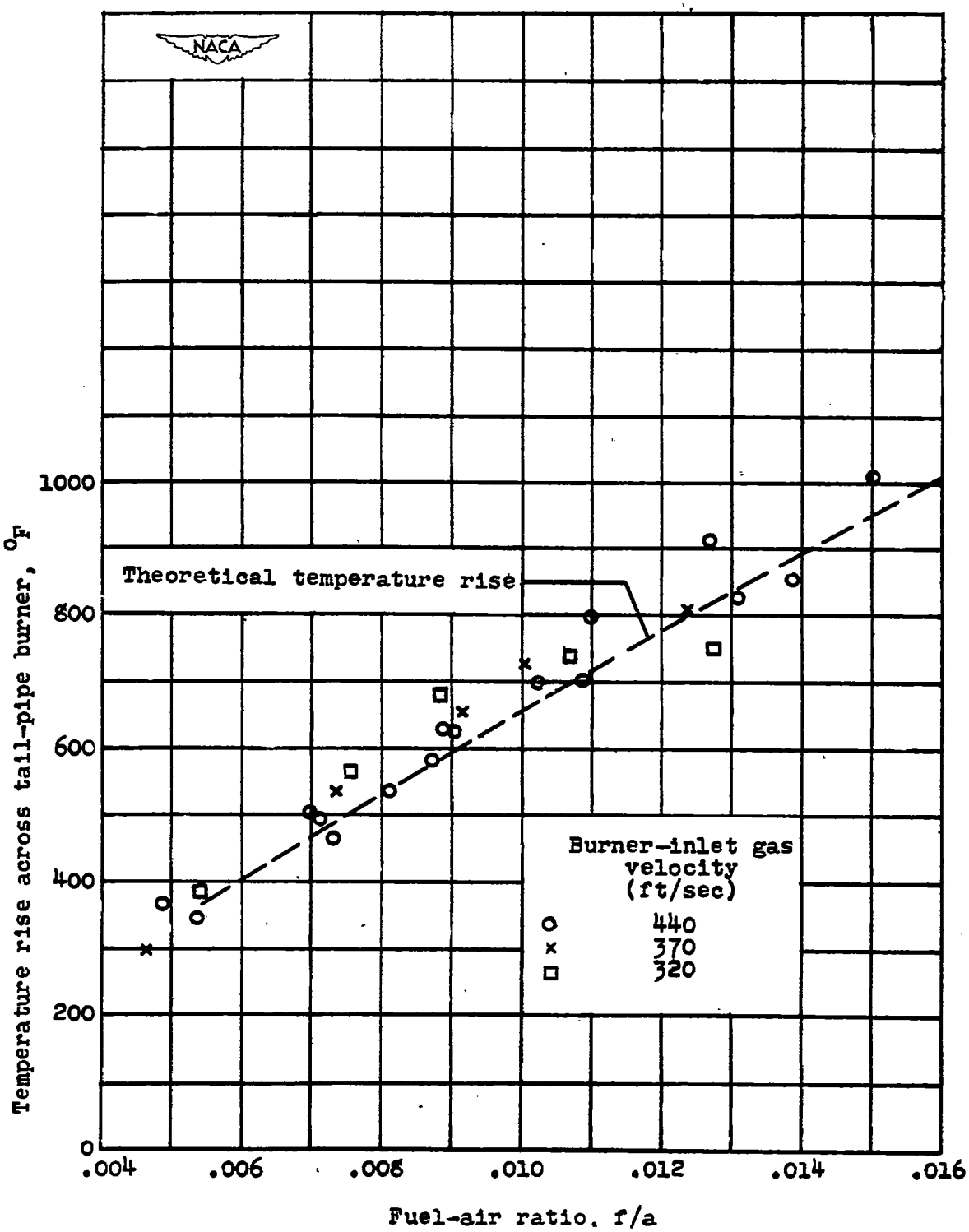

Figure 5. - Variation of temperature rise with fuel-air ratio at various burner-inlet gas velocities for tail-pipe burner 8. Fuel, AN-F-22.

CONFIDENTIAL

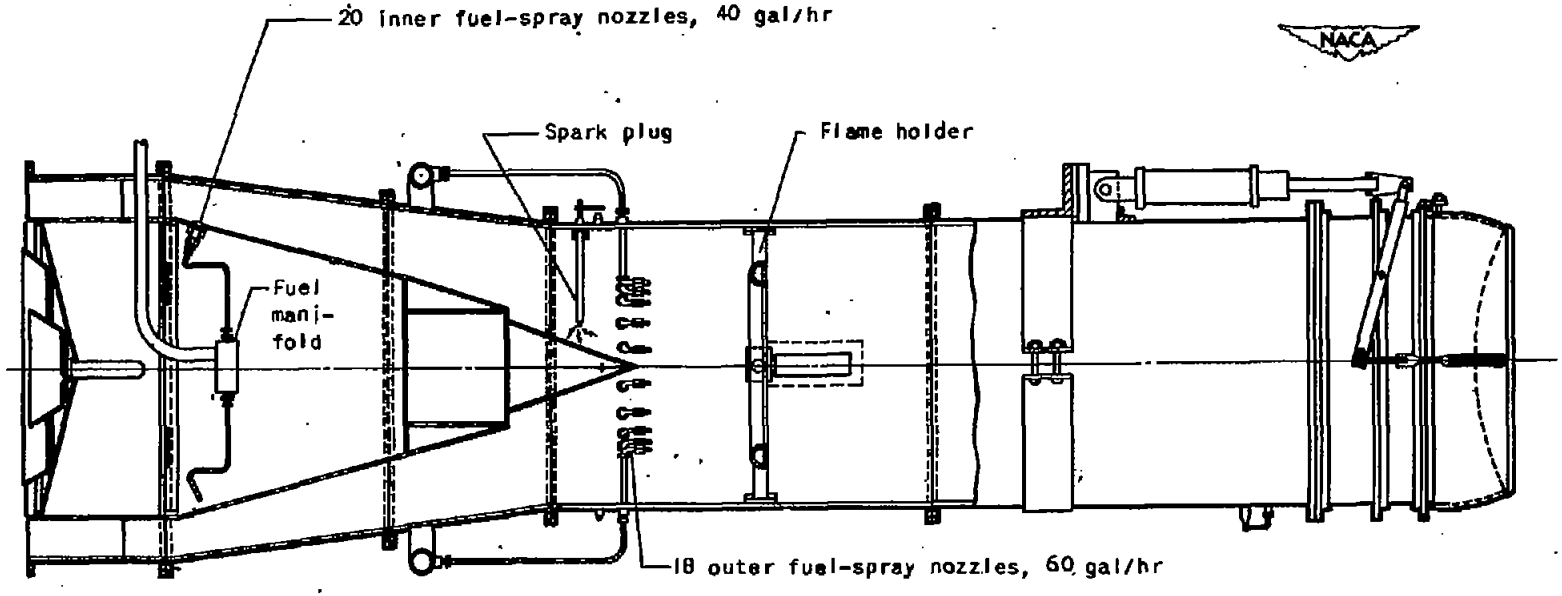

Figure 6. - Sketch of burner used in engine investigation reported in reference 2.

CONFIDENTIAL

081-917

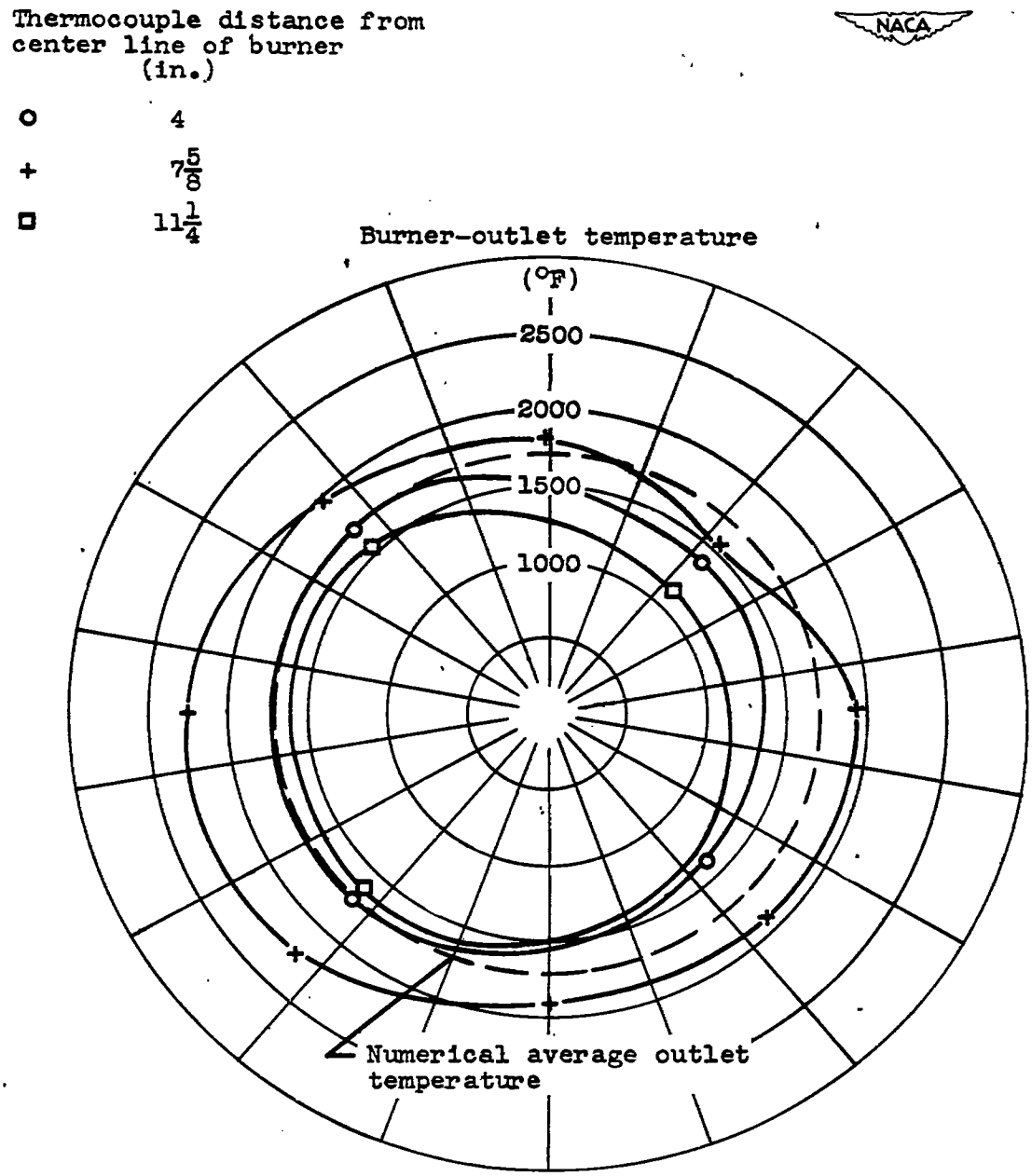

Figure 7.-Temperature distribution at outlet of tail-pipe burner 8. Inlet velocity, 440 feet per second; fuel-air ratio, 0.0089; fuel, AN-F-22.

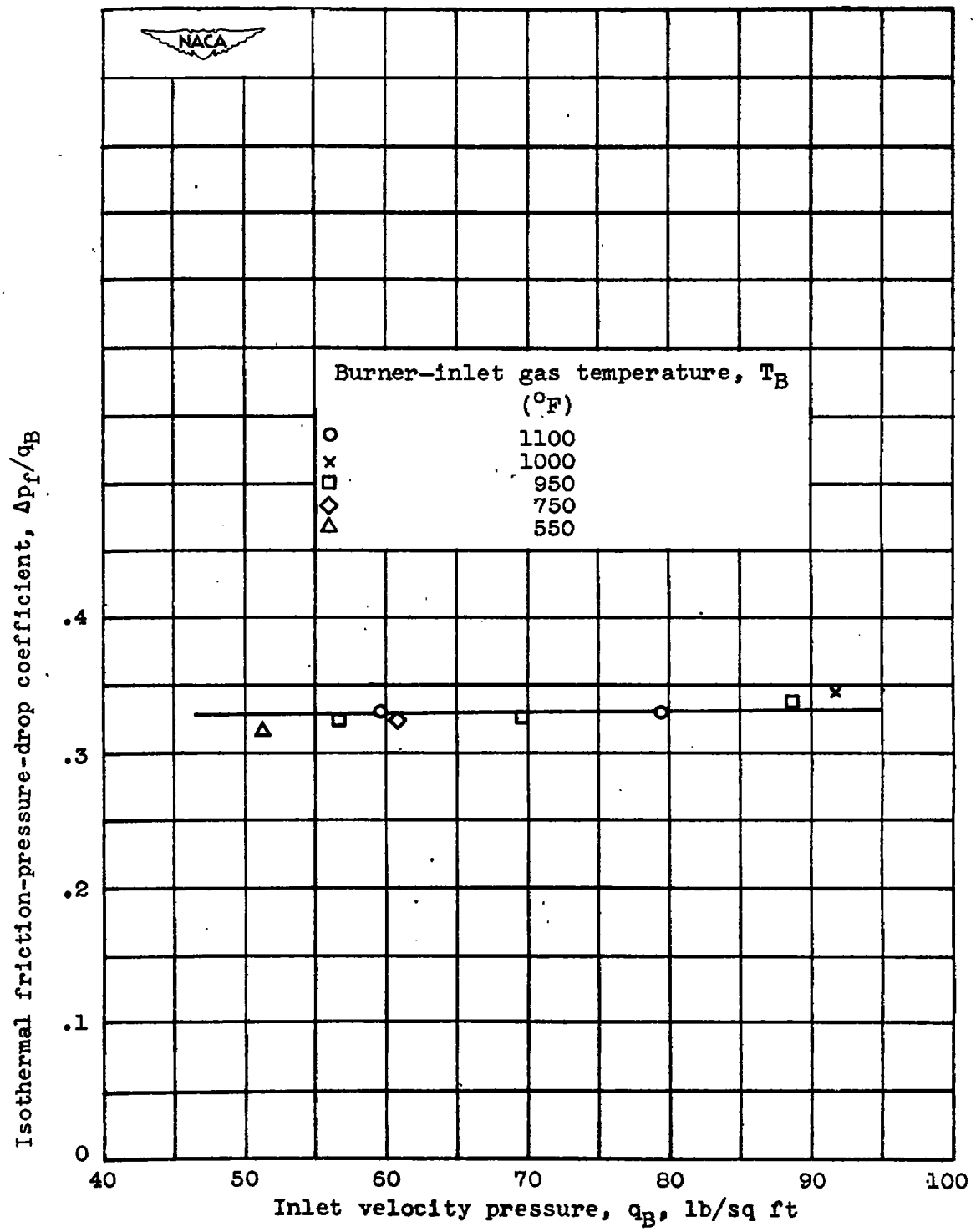

Figure 8.-Variation of isothermal friction-pressure-drop coefficient with inlet-velocity pressure at several burner-inlet gas temperatures for tail-pipe burner 8.

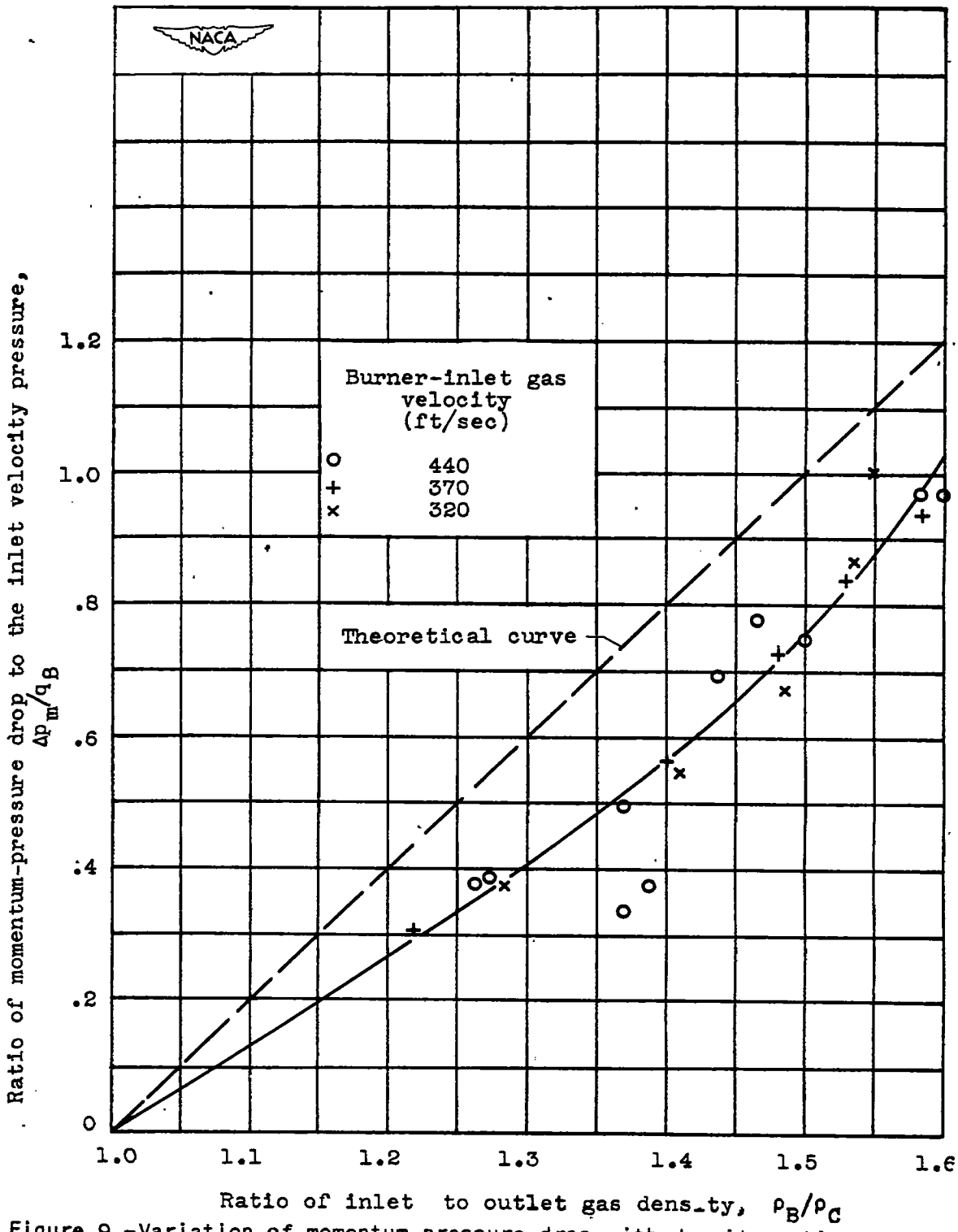

Figure 9.-Variation of momentum pressure drop with density ratio across burner 8. Fuel, AN-F-22.

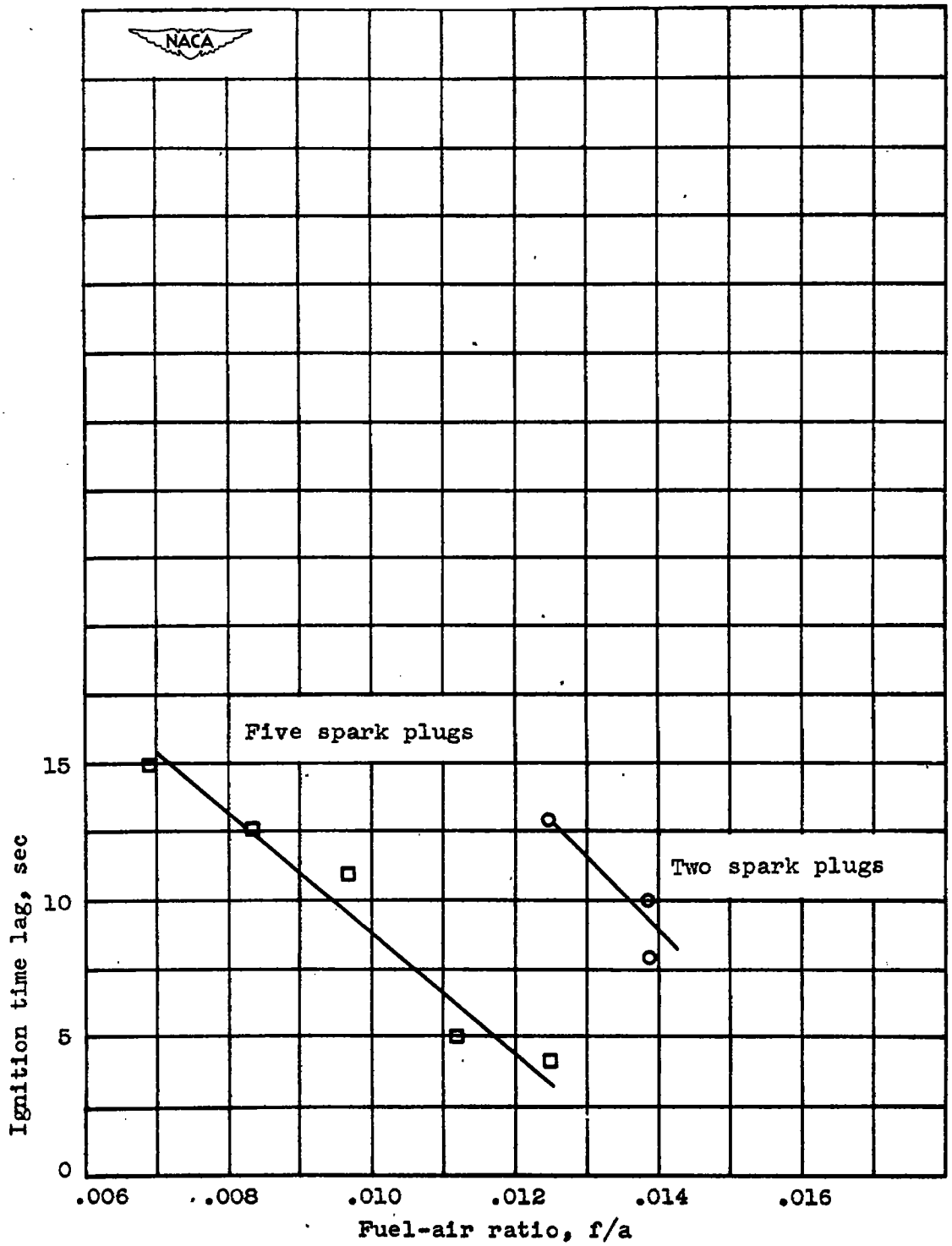

Figure 10.-Variation of ignition time lag with fuel-air ratio for two spark-plug configurations in burner 8. Inlet gas temperature, 1100° F; inlet-gas velocity, 400 feet per second; fuel, JP-1.

787

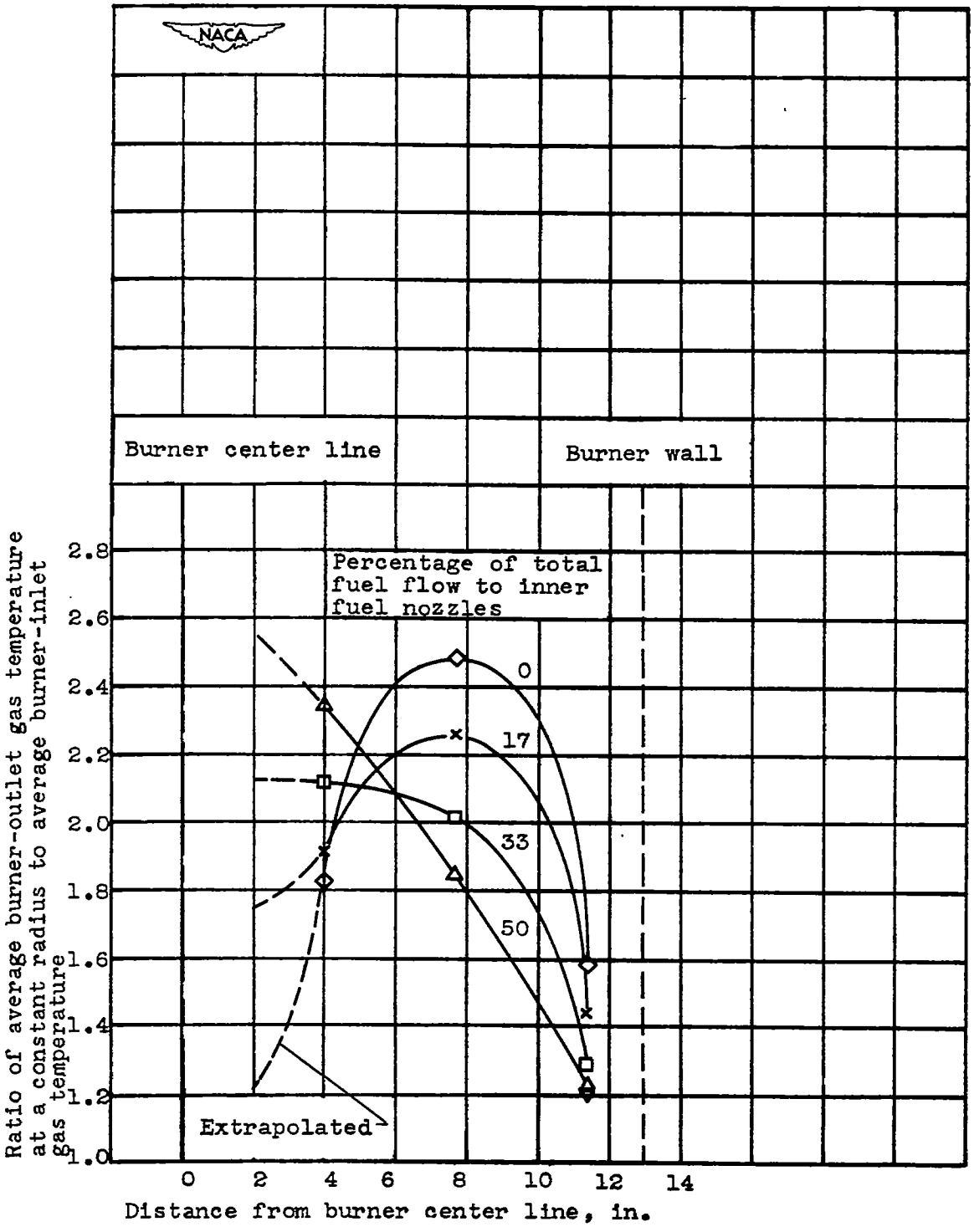

Figure 11.-Radial temperature distribution for various percentages of total fuel flow to inner fuel nozzles for burner 9. Burner-inlet gas velocity, 400 feet per second; burner total fuel-air ratio, 0.010; fuel, JP-1.