1355
8059

TECH LIBRARY KAFB, NM
0144626

NATIONAL ADVISORY COMMITTEE FOR AERONAUTICS

TECHNICAL NOTE

No. 1355

A STUDY OF METAL TRANSFER BETWEEN SLIDING SURFACES

By B. W. Sakmann, N. Grossman, and John W. Irvine, Jr.

Massachusetts Institute of Technology

Washington

September 1947

AFMDC
TECHNICAL LIBRARY
AFL 2811

3 17.98/41

TECH LIBRARY KAFB, NM
0144626

NATIONAL ADVISORY COMMITTEE FOR AERONAUTICS

TECHNICAL NOTE NO. 1355

A STUDY OF METAL TRANSFER BETWEEN SLIDING SURFACES

By B. W. Sakmann, N. Grossman, and John W. Irvine, Jr.

SUMMARY

This study is part of a program to determine the nature of the surfaces formed on hardened steel parts during rubbing, notably on piston rings and cylinders during run-in. The technique, previously developed in the Lubrication Laboratory, Massachusetts Institute of Technology, of measuring the extremely small amounts of material transferred from one rubbing surface to another by making one of the surfaces radioactive and observing the subsequent activity on the other one, is applied in these experiments to hardened steel surfaces, both nitrided and non-nitrided, and to chromium-plated steel.

Although the number of experiments was insufficient to separate definitely the effect on the amount of material transferred of the difference in hardness of the two surfaces from the difference in materials, it may tentatively be concluded that:

(a) Much more material was transferred from the softer steel to the harder than the reverse.

(b) From a softer steel surface much less material was transferred to chrome plate than to nitrided steel.

(c) Of the combinations studied, there was least mutual transfer between nitrided steel and chromium plate.

These results suggest that the vitreous layers on the surfaces of run-in piston rings observed by the NACA Flight Propulsion Research Laboratory are composed, at least in part, of material transferred from the cylinder wall. Therefore, any further investigation should compare carefully the layers on rings run against cylinder walls having different compositions. Furthermore, a possible pretreatment to obtain a desirable surface layer might consist in running rings in a special cylinder having walls of specially selected composition and controlled hardness to give surface layers of highly improved characteristics in a minimum length of time.

INTRODUCTION

It was the aim of this research to gain information about the wear properties of different materials used for piston rings and cylinders. Besides the general importance of this problem, the wear of piston rings is further complicated by the appearance of metallurgical transformations the nature of which has not yet been determined. The material transferred in the following combinations was measured:

From non-nitrided steel to { non-nitrided steel, nitrided steel, chromium-plated steel }

and

From nitrided steel to { nitrided steel, non-nitrided steel, chromium-plated steel }

In previous work it was shown that transfer of matter between sliding metals could be determined by radioactivation of one of the two surfaces. The surfaces were slid over each other, and the activity of the initially inert surface was measured. From these activity measurements the amount of metal transferred was determined. In most of these experiments riders of different materials and surface properties were slid over an activated copper-alloy surface; a few preliminary tests were also made with an activated surface of manganese steel. In both cases, the surfaces were activated by direct bombardment of deuterons from a cyclotron. Because of the low penetrating power of the deuterons, most of the activity was concentrated at the surface of the copper alloy; the bulk material a short distance from the surface was practically inactive. Since the material affected in the friction tests was near the surface and in the region of high specific activity, the sensitivity of the method was high. For the case of copper-alloy surfaces, the sensitivity was so great that on the order of 10^{-10} gram of metal could be detected. Although the method was extremely sensitive, its absolute accuracy left much to be desired. It was particularly difficult to compare measurements made with different activations of the copper-alloy surface; the dependence of the specific activity on the distance below the surface was the main reason for the limited accuracy.

In the present work, friction specimens were prepared which were uniformly radioactive throughout the bulk material. In this way, it was possible to eliminate the main source of error. The absolute accuracy of the measurements was greatly improved, and it was possible to compare measurements made with different activated specimens. The sensitivity of the tracer method with uniformly activated specimens was 1000 times less, however, than with the surface activation. One-tenth

of a microgram was the smallest amount of material that could be measured with certainty. A part of this decrease in sensitivity was due to the fact that only gamma rays were used for these activity measurements, while in the previous work all the radiation (beta rays and positrons, as well as gamma rays) had been utilized.

This investigation, conducted at the Massachusetts Institute of Technology, was sponsored by and conducted with the financial assistance of the National Advisory Committee for Aeronautics.

PREPARATION OF SPECIMENS

In previous experiments (reference 1) the surface of the friction specimen to be activated was directly exposed to the deuteron beam of a cyclotron, but because of the low penetrating power of the deuterons the activity decreased rapidly with the distance from the exposed surface. In the present tests, the radioactive manganese was added to the steel, and the two were melted together, thus ensuring that the radioactive manganese was uniformly distributed throughout the steel. The distribution of radioactivity throughout the resulting pellet was determined experimentally by fragmentation of the pellet and measurement of the specific activity of each fragment, that is, the activity per milligram of fragment.

All specimens (active, inactive, nitrided, non-nitrided, and chromium plated) were made of Nitralloy steel. (See reference 2.) The active specimens were made from a 1/4-inch Nitralloy rod, and the inactive specimens were prepared from a 2½- inch round bar of Nitralloy 135 Modified. The two pieces of stock had practically the same chemical composition, as follows:

	Rod	Nitralloy 135 Modified
Carbon	0.42	0.38 – 0.45
Manganese	.57	.40 – .70
Silicon	.35	.20 – .40
Chromium	.59	1.40 – 1.80
Aluminum	1.01	.85 – 1.20
Molybdenum	.35	.30 – .45
Phosphorus	.016	
Sulfur	.016	

Melting Procedure for Active Specimens

The main difficulty in the preparation of the active specimen was caused by the fact that the radioactive manganese was in the form of manganese oxide rather than metallic manganese. In order to make sure that the manganese oxide was reduced, two reduction methods were applied simultaneously: the thermite process and reduction in a hydrogen atmosphere. It was hoped that the aluminum oxide formed during the melting would be deposited on the outside of the melted pellet.

The radiomanganese was prepared in the M.I.T. cyclotron by deuteron bombardment of chromium. The nuclear reaction involved is

$$_{24}Cr^{52} + {}_{1}H^{2} \longrightarrow {}_{25}Mn^{52} + {}_{0}n^{1}$$

The manganese thus prepared has a half life of 6.5 days. Thirty-three percent of it decays by positron emission (0.582 MEV) and 67 percent by orbital electron capture. Either mode of disintegration leads to an excited state of $_{24}Cr^{52}$ which emits three gamma rays in cascade (0.734, 0.94, and 1.46 MEV). (See reference 3.)

A chromium-plated wiggler probe (reference 4) was bombarded with 14.5-MEV deuterons by the cyclotron. After bombardment the chromium was dissolved from the target with 12 molar HCl containing 5 milligrams of inactive manganese for a carrier. This acid solution was poured into an excess of cold 6 molar NaOH containing an excess of 30 percent H_2O_2; the chromium was thus oxidized to chromate, soluble, and the manganese took the form of hydrated MnO_2, insoluble. The colloidal precipitate was coagulated by heat and filtered from the solution. After being thoroughly washed, the MnO_2 was dissolved in a small amount of dilute HCl containing a trace of H_2O_2.

Precipitation of the hydrated oxide was repeated by use of 6 molar $NH_4OH + H_2O_2$. The second precipitation removed the last traces of chromium and copper in the filtrate. The precipitate was dissolved as before and an aliquot of the solution reserved for activity measurements. The manganese was precipitated a third time, again with $NH_4OH + H_2O_2$, and filtered out on ashless filter paper, washed thoroughly, and ignited in a porcelain crucible to Mn_3O_4.

The ignited oxide was wrapped in 0.00025-inch aluminum foil and introduced into a Nitralloy cup machined from a 1/4-inch length of rod

and weighing about 1 gram. The amount of aluminum was 50 percent greater than that needed to reduce completely the manganese oxide to the metallic state.

The steel cup and its contents were then placed in a beryllia crucible which was contained inside a graphite crucible of 1½- inch diameter and 2½- inch height. A graphite lid was fitted to this crucible, and the entire assembly was placed in an alundum crucible which was supported inside the coil of an induction furnace.

In order to ensure as far as possible the complete reduction of the manganese to the metallic state, it was necessary to replace the oxygen atmosphere with hydrogen. For this purpose, dry hydrogen gas was caused to flow into the interior of the graphite crucible through a hole in the lid. After the hydrogen had been flowing for 15 minutes and the steel cup was presumably surrounded by a hydrogen atmosphere, the induction furnace was started and the temperature raised slowly. The power was shut down after 5 minutes, and the crucible allowed to cool in air.

The smelting procedure finally adopted was the result of several preliminary experiments, by which the proper dimensions of the graphite crucible were determined, as well as the smelting time and other details. It is to be noted that the graphite crucible was heated by the induction current and the beryllia crucible and steel pellet were heated by radiation and conduction from the graphite. The steel mass was too small to be heated appreciably by current induced in it.

In order to see whether the manganese oxide was reduced in a satisfactory way, metallographic cross sections of different pellets were prepared. None of the sections revealed any manganese-oxide inclusions, thus showing that any manganese-oxide particles which might be present were of submicroscopic size.

For a check on the uniformity of the distribution of the radioactivity, several pellets were fragmented and the gamma-ray activity of the different fragments was measured. The following table gives a typical example of the activity measurements of a set of fragments:

Weight of fragment (mg)	Radio-activity (cpm)[1]	Specific activity (cpm/mg)
87.7	611	7.85
111.8	848	7.59
193.8	1372	7.08
76.3	542	8.21
73.0	522	8.26
210.8	1449	6.86
33.8	229	6.77
14.5	105	7.96
32.6	225	6.91
107.2	770	7.18
123.1	918	7.46
201.7	1429	7.00
72.5	532	7.33

[1] cpm counts per minute

Error calculations applied to the foregoing set of measurements show that the probable error of a single measurement of the specific activity equals 4 percent of the arithmetic mean. Measurements with smaller fragments the average weight of which was about 7 milligrams gave similar results. The conclusion to be drawn from these tests is that within the investigated range of the weight of the fragments the distribution of activity is uniform.

Hot Working, Heat Treatment, and Machining

In order to render the structure of the active specimen as nearly as possible like that of commercially used Nitralloy, the specimen was heated in cast-iron chips to 2100° F and then struck a couple of blows by an air hammer, which flattened it to a disk approximately 1/2 inch in diameter and 1/16 inch in thickness. The disk was then annealed by being heated to 1800° F and allowed to cool in the furnace for a 3-hour period. It was next reheated to 1700° F, kept at this temperature for 1 hour, and oil quenched. Finally, it was tempered at 1200° F.

A layer 0.01 inch thick was removed, in a surface grinder, from each side of the heat-treated disk in order to take off any decarburized material. The disk was then cut along two parallel chords. The central,

parallel-side piece, about 3/16 inch wide, was nitrided at 975° F for a 24-hour period, with 30-percent dissociation of the ammonia gas. A photomicrograph of part of this piece is shown in figure 1. The structure appears typical of a heat-treated nitriding steel.

The nitrided rider was made from a strip cut from the center of the nitrided piece, perpendicular to the long sides. The non-nitrided rider was cut from one of the segments of the disk. Each strip was soldered into an axial hole drilled in the end of a suitable steel bolt, and a short protruding portion of the strip ground to a diameter of approximately 1/32 inch. The bolt was then attached to the horizontal arm of the testing apparatus shown in figure 2.

Preparation of Inactive Specimens

All the inactive specimens, which were made from Nitralloy 135 Modified, were cylindrical in shape, approximately 2½ inches in diameter and 2 inches long. All were provided with countersunk holes to mount them in the lathe between centers, and with means for attachment of a driving dog.

The specimens to be plated were first ground and then plated with bright chromium to a thickness of approximately 0.001 inch.

The specimens to be nitrided were first heated to 1700° F, held for 1½ hours, and quenched in oil. They next were tempered at 1200° F and held at this temperature for 3 hours. In order to remove all decarburized material, a layer 1/16 inch thick was machined from the cylinders, after which they were nitrided in 30-percent dissociated ammonia gas for a 72-hour period.

All the specimens were ground by the same wheel (frequently redressed) and under the same conditions. The surface roughness, as measured by a profilometer parallel to the axis of the cylinders, was as follows:

Material	Roughness (rms microin.)
Non-nitrided Nitralloy	35 – 45
Nitrided Nitralloy, ground after nitriding	15 – 25
Chromium-plated Nitralloy, ground before plating	30 – 40

TEST PROCEDURE

A screw-cutting bench lathe formed the basis of the testing apparatus. The cylindrical inactive specimen was mounted between centers and driven by a dog. The small radioactive rider was carried on a horizontal arm hinged at one end to an upright clamped in the tool post of the lathe. The hinge was made from a piece of thin spring steel, so that there was no play laterally or in the direction of rotation of the cylinder. A weight, hanging from the free end of the arm, pressed the rider against the inactive specimen. The testing apparatus is shown in figure 2.

The inactive cylindrical specimen was mounted between centers in the lathe and finished by a small electric grinder mounted on the slide rest of the lathe. A strip of fine emery paper was then wrapped around the cylinder and the rider ground to conform to the curvature of the inactive surface, by being pressed against the moving paper, after which the rider was placed in contact with the cylinder under the desired load. The lathe was started and the rider moved over the cylinder in a helical path by the automatic carriage feed. The distance traveled by the carriage was approximately 1.75 inches.

A photomicrograph of the end of a used rider is shown in figure 3. The true area of contact is seen to approximate that of the rider end.

Different methods were tried, to remove the transferred material from the initially inactive specimens. At first, a non-nitrided cylinder was turned down on the lathe, and a chip 1/1000 inch in thickness was taken off. The chips were put on a mica sheet which was placed over the window of a Geiger-Muller counter; it was found that the activity of the chips was well above the background of the counter. Similar tests were made with nitrided inactive specimens, which were so hard that the transferred matter had to be ground off with a grinding attachment to the lathe. Despite the fact that there was ample activity in the chips or the grinding debris, measurement of activity was found to be both inaccurate and inconvenient. While some of the beta rays originating from the chips reached the counter, a portion was absorbed by the material of the chips. The fraction of the radiation absorbed depended not only on the geometry of the individual chips but also on their relative positions. The activity measured for a given assembly of chips changed if the chips were rearranged. It was, therefore, decided to try to etch off the transferred material. The method finally adopted was as follows:

In order to remove the material transferred to the cylinder during a run, the cylinder was placed in a beaker containing 60 ml of a nearly

boiling solution of 1-molar hydrochloric acid, to which had been added a small amount of hydrogen peroxide. After being etched for 15 minutes, the cylinder was removed and the solution in the beaker evaporated to dryness. The residue was dissolved in hydrochloric acid and the solution diluted so that it just filled a 10-ml glass vial. This etching procedure satisfactorily removed all the transferred material from the cylinder.

Measurements of the activity of the dissolved residue were made with a platinum-screen-wall gamma-ray counter and counting-rate meter. All measurements of transfer samples were compared with standard solutions containing known weights of the radioactive alloy. The standard solutions were prepared from the radioactive friction specimen. A few milligrams of the radioactive specimen were accurately weighed and dissolved in hydrochloric acid. The solution was diluted so that the activity of 10 ml was of the same order of magnitude as the solution of the etched-off material. From the degree of dilution and the weight of the dissolved chip could be determined the amount of active material contained in 10 ml. The comparison of standard solution and solution of transferred material was made under identical conditions of geometry and in such a short time interval that decay was negligible. The weight of metal transferred was determined by a simple ratio of counting rates of transfer sample to standard weight of original metal. The assumptions involved in this comparison are that the radioactive manganese is uniformly distributed in the active alloy and that the transferred material was representative of the active alloy. The first assumption was checked in the supplementary experiments described and the second is reasonable.

RESULTS OF TESTS

All tests were run under a normal load of 1000 grams. The surface velocity of the rotating cylinder was 55 feet per minute in nearly all runs; in a few cases it was 59 feet per minute. Preliminary tests had indicated that this slight change in speed did not affect the results. The pitch used in these experiments was 48 per inch, the diameter of the inactive specimens was $2\frac{7}{16}$ inches, and the length of travel $1\frac{3}{4}$ inches. The total distance of travel was 643 inches. The results are given in the following table:

To inactive specimen of –	Mass transfer (micrograms), from active specimen of –					
	Non-nitrided Nitralloy			Nitrided Nitralloy		
	m [1]	$\bar{m}$	$\sigma_{\bar{m}}$	m	$\bar{m}$	$\sigma_{\bar{m}}$
Non-nitrided Nitralloy	4.9 2.1 2.1 2.5	2.9	±0.7	0.8 .8 .4 .6 .8	0.7	±0.1
Chromium plate	39 97 29 21 53	48	±13	1.7 .9 1.8 1.4 4.5	2.1	±0.6
Nitrided Nitralloy	111 90 147 174	131	±19	1.2 2.5 .8 4.0 2.0 3.7	2.4	±0.5

[1]In this table:

m measured mass transfer in any one test, micrograms

$\bar{m}$ arithmetic mean value of m for n tests on any given combination of materials $\left(\frac{\sum_n m}{n}\right)$, micrograms

$\sigma_{\bar{m}}$ standard deviation of $\bar{m} = \sqrt{\frac{\sum_n (m-\bar{m})^2}{n(n-1)}}$, micrograms

It is seen from the preceding table that, in all cases, considerably more material was transferred from the non-nitrided active specimen than from the nitrided one. Furthermore, the transfer from either active specimen to non-nitrided steel was less than that to chromium plate or nitrided steel. The standard deviation of the mean varies from ±10 to ±29 percent, with an average value of roughly ±25 percent.

The different specimens involved in the tests had the following hardness values, expressed as Knoop hardness numbers, obtained in a Tukon hardness tester:

Active specimens	Inactive specimens
Non-nitrided Nitralloy rider.....480	Non-nitrided Nitralloy cylinder..327
Nitrided Nitralloy rider..350 to 770	Nitrided Nitralloy cylinder.....565
	Chromium-plated Nitralloy cylinder.....1614

The variation in hardness over the working end of the nitrided rider was due to its laminar or sandwichlike structure. Two sides of this end had been exposed to the ammonia gas during the nitriding process and were very hard. Between these two hard layers was a strip of softer material. The widths of all three layers were about the same, each being roughly one-third of the total. The Knoop hardness number varied linearly from 770 at either edge to 350 at the boundaries of the central strip. The hardness of this strip was practically uniform and equal to 350 Knoop. Hence while only approximately one-third of the area of the nitrided rider was harder than that of the non-nitrided active specimen, most of the load will be taken by the hardest area. It is believed therefore that for the purposes of these experiments the rider can be considered as having an average hardness of 600 to 700. Both riders were harder than the non-nitrided inactive Nitralloy.

SUMMARY OF RESULTS

The previous work (reference 1) had shown that the amount of material transferred between two metallic rubbing surfaces depended both on the relative hardness and on the materials of which they were composed. This work was done by rubbing a number of different surfaces, including hardened steel and glass, against a copper alloy.

The present experiments generally established the fact that the

radioactive method can also be applied to measurements of metal transfer when both surfaces are of hardened steel, and have therefore laid the foundation for further investigation.

The great uncertainty in the amount of transfer with different activations of one of the surfaces by direct exposure to a cyclotron beam was much reduced by adding the radioactive material as an alloying agent to a melt of the steel. In this way, the distribution of activity throughout the surface was made much more uniform.

Insofar as it is possible to dissociate the effects of relative hardness and of material in the present experiments, the following tentative conclusions may be reached:

(a) In the non-nitrided and nitrided Nitralloy combination, much more material is transferred from the softer material which is the non-nitrided one, to the harder, nitrided surface than the reverse.

(b) On comparing chromium plate and nitrided Nitralloy when both are harder than the non-nitrided rider, it was found that less material was transferred to the material of greater chemical difference, that is, the chromium.

(c) Since the nitrided Nitralloy running against the chromium plate was the best metal-pair combination tested with respect to minimum material transferred, according to (a) it is to be expected that even less than 2.1 ± 0.6 micrograms would be transferred from the harder chromium plate to the softer rider.

Massachusetts Institute of Technology,
Cambridge, Mass., July 9, 1946.

REFERENCES

1. Sakmann, B. W., Burwell, J. T., Jr., and Irvine, J. W., Jr.: Measurements of the Adhesion Component in Friction by Means of Radioactive Indicators. Jour. App. Phys., vol. 15, no. 6, June 1944, pp. 459-473.

2. Homerberg, V. O.: Nitralloy and the Nitriding Process. Nitralloy Corp. (New York, N. Y.), 1943.

3. Peacock, W. C., and Deutsch, M.: Disintegration Schemes of Radioactive Substances - IX. Mn^{52} and V^{48}. Phys. Rev., vol. 69, 1946, pp. 306-313.

4. Livingston, M. S.: The Cyclotron. Jour. App. Phys., vol. 15, Feb. 1944, pp. 128-147.

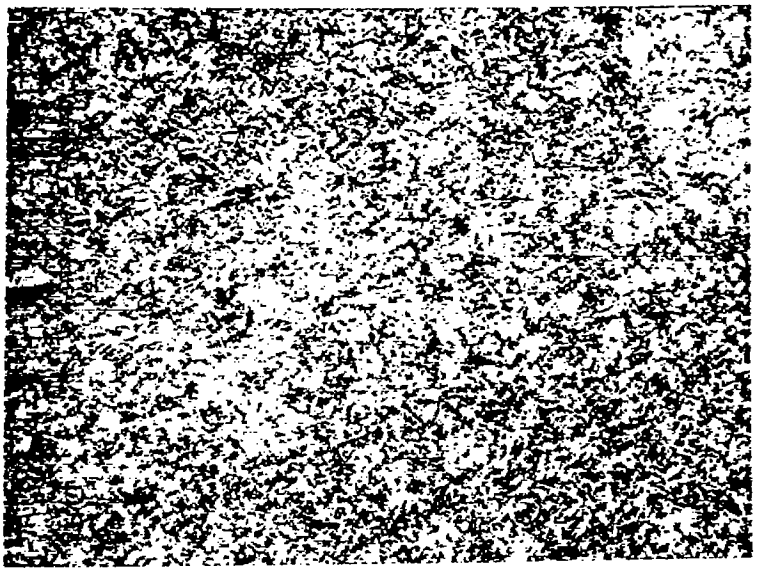

Figure 1.- Section of nitrided radioactive Nitralloy. Etched with nital. (250 X)

NATIONAL ADVISORY COMMITTEE
FOR AERONAUTICS

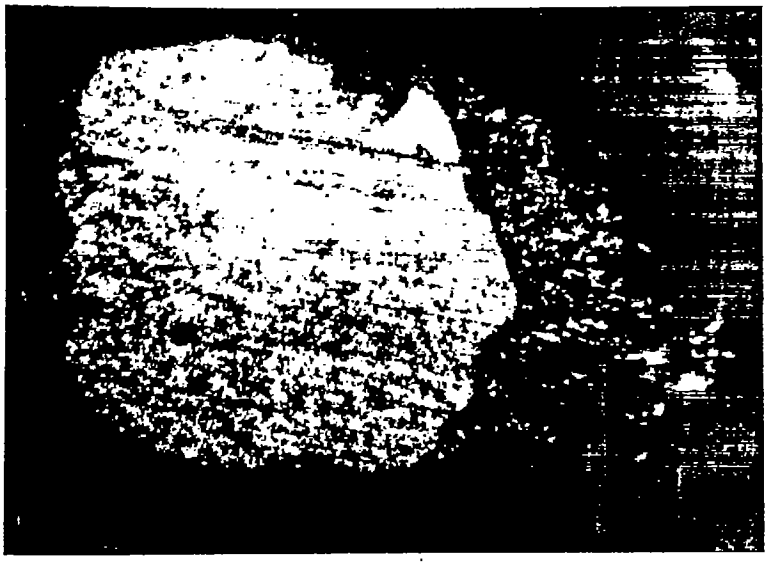

Figure 3.- Working end of nitrided rider after a friction test. (100 X)

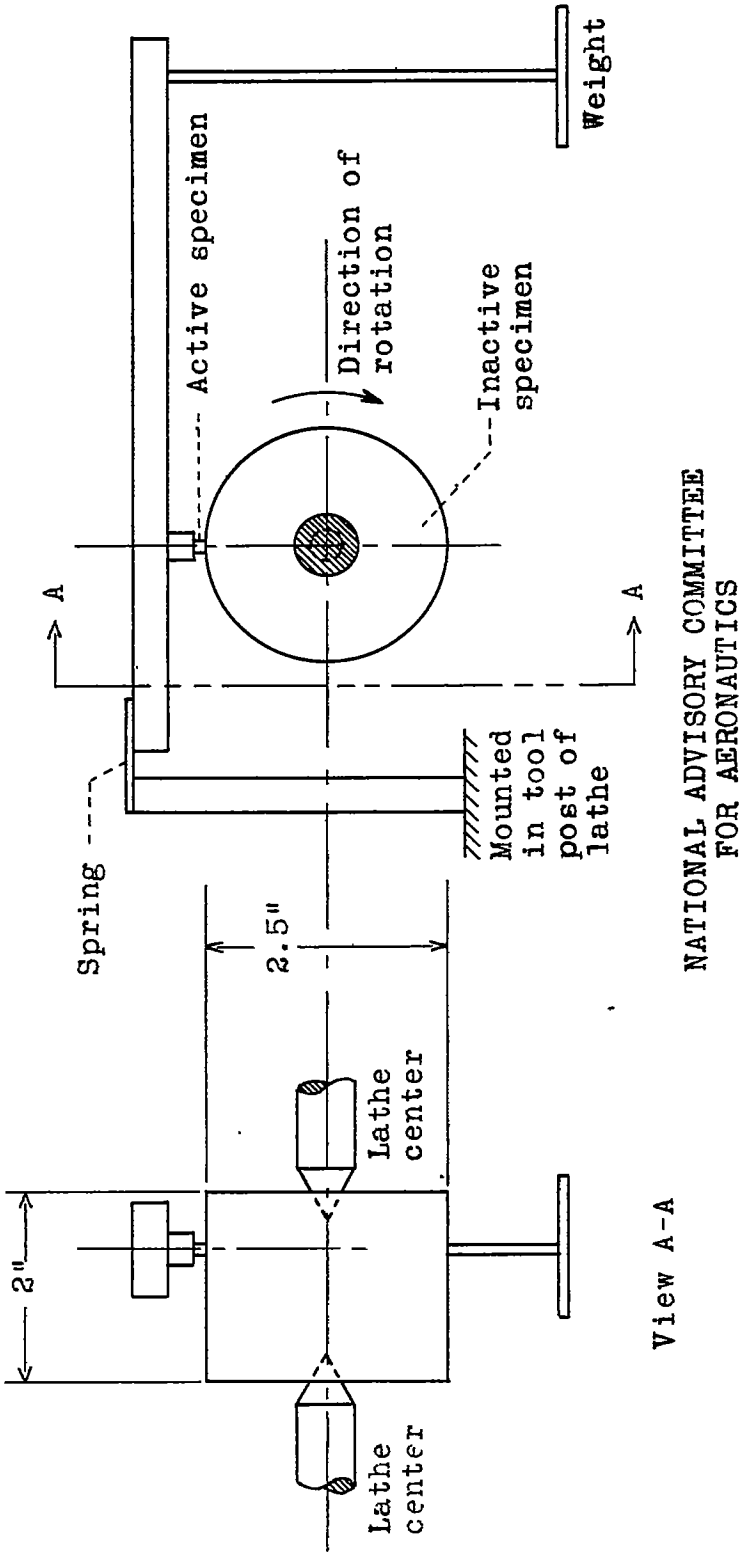

NATIONAL ADVISORY COMMITTEE FOR AERONAUTICS

Figure 2.- Diagram of apparatus.