No. 1361

NATIONAL ADVISORY COMMITTEE FOR AERONAUTICS

TECHNICAL NOTE

No. 1361

DEFORMATION ANALYSIS OF WING STRUCTURES

By Paul Kuhn

Langley Memorial Aeronautical Laboratory
Langley Field, Va.

LIBRARY COPY

APR 29 1993

LANGLEY RESEARCH CENTER
LIBRARY NASA
HAMPTON, VIRGINIA

Washington

July 1947

NATIONAL ADVISORY COMMITTEE FOR AERONAUTICS

TECHNICAL NOTE NO. 1361

DEFORMATION ANALYSIS OF WING STRUCTURES

By Paul Kuhn

SUMMARY

The elementary theories of bending and torsion often do not describe the stresses in aircraft shell structures with adequate accuracy; more refined stress theories have therefore been developed over a period of years. Theories of this nature are applied to the problem of calculating the deflections, particularly of wings. Bending as well as torsional deflections are discussed for wings without or with cut-outs. Whenever convenient, the formulas are given in such a form that they yield corrections to be added to the deflections calculated by means of the elementary theories. Examples show that the deflection corrections usually are quite small; very simple approximation formulas are therefore adequate for design purposes when conventional structures under a reasonably uniform loading are being considered.

INTRODUCTION

The elementary theories of bending and torsion are often not sufficiently accurate for determining the stresses in airplane wings. The bending stresses are modified by shear lag and the torsion stresses, by the so-called bending stresses due to torsion. While an appreciable amount of literature exists on these subjects, little attention has been given to the resulting effects on the bending or torsional deflections. This relative lack of attention was not accidental. The deviations of the stresses from those predicted by the elementary theories are local, and local disturbances are leveled off by the integration processes necessary to calculate deflections. The deviations of the deflections from those predicted by the elementary theories are therefore much smaller than the stress deviations, and this fact, together with the fact that deflections were only of subordinate interest in the past, accounts for the small amount of attention given to deflection calculations. However, the rapidly increasing importance of deflection calculations makes it desirable to give some discussion of the problems.

SYMBOLS

A uniform system of symbols is used herein to cover torsion as well as bending problems. Some of the symbols differ, therefore, from those used in the references. Particular attention is called to the fact that the symbol b denotes the full width of the box, whereas it denoted the half-width of the box in all the references dealing with shear lag.

a	length of bay
b	width of box beam
c	width of net section alongside cut-out (coaming stringer to corner flange)
d	half-length of cut-out; half-length of carry-through bay
f	fractions defined by equation (15)
h	depth of box beam
h_F	depth of front spar
h_R	depth of rear spar
k	torque-division factor (fraction of torque carried by shear webs in cut-out bay)
n	order number of any station or bay
p, q	coefficients used in torsion-bending analysis (appendix A)
r	order number of root station or bay
q	shear flow (shear force per inch run)
t	thickness of sheet (when used without subscript denotes thickness of cover sheet of box beam)
t_{bl}, t_{hl}, t_c	see figure 5
w	width of cut-out
w^T	coefficient used in torsion-bending analysis (appendix A)

x, y, z	coordinates (see figs. 1 and 2)
A	area of corner flange in cross section of box as simplified for torsion analysis
A_{CF}	cross-sectional area of actual corner flange
A_F	area of corner flange in cross section of box as simplified for shear-lag analysis
A_L	area of longitudinal in cross-section of beam as simplified for shear-lag analysis $\left(= \frac{1}{2}A_{ST} \text{ except at cut-out}\right)$
A_{ST}	total cross-sectional area of all stringers on one cover of box beam, including effective widths of sheet
A_T	$A_F + A_L$
A_o	area enclosed by cross-section of torsion box
A_1, A_2, A_3	see figure 5
E	Young's modulus
G	shear modulus
I	moment of inertia
J	torsion constant
K	torsion-bending parameter (equation (12)) or shear-lag parameter (equation (26))
L	length of box beam (root to tip)
M	bending moment
P	force or load
R	radius of curvature of elastic line
S_W	shear force in shear web (equals external shear force minus vertical component of flange force)

T	torque
X_n	correction force in corner flange at station n
$\tilde{\delta}$	bending deflection of box beam calculated by elementary theory $\left(\frac{M}{EI}\text{ deflection}\right)$
δ_1	additional bending deflection caused by shear lag in cover
δ_2	additional bending deflection caused by shear deformation of shear web
η	structural parameter defined by equation (11)
σ	direct stress
τ	shear stress
φ	angle of twist of torsion box

Subscripts:

b	pertaining to horizontal wall of box beam
c	pertaining to net section alongside cut-out
e	effective
h	pertaining to vertical wall of box beam
r	root
co	cut-out, cut-out bay
ct	carry-through bay
fb	full bay
L	pertaining to longitudinals (stringers)
S	substitute

Sub-subscripts:

B	bottom
F	front

R rear

T top

Superscripts:

T caused by torque

X caused by X-force group

A tilde (~) denotes quantities calculated by elementary theory of bending or torsion.

PREPARATORY DISCUSSION

Elementary theories.- According to the elementary theory of torsion, a torque T applied to a wing section such as shown in figure 1 produces a shear flow

$$\tilde{q} = \frac{T}{2A_o} \tag{1}$$

in the skin and an angle of twist between two sections a distance dx apart

$$d\tilde{\varphi} = \frac{T\,dx}{GJ} \tag{2}$$

The tilde (~) is used throughout the present paper to indicate stresses or deflections calculated by the elementary theory.

According to the elementary theory of bending, a vertical bending moment M applied to the section shown in figure 1 produces bending stresses

$$\tilde{\sigma} = \frac{Mz}{I} \tag{3}$$

(provided that principal axes are used) and the bending deflection $\tilde{\delta}$ is obtained by integrating the familiar relation between the curvature of the elastic line and the bending moment

$$\frac{1}{R_1} = \frac{d^2\delta}{dx^2} = \frac{M}{EI} \tag{4}$$

The bending deflection δ is increased by the so-called shear deflection δ_2 arising from the shear strains in the vertical webs. The method of calculating this deflection is well known and requires no comments here.

Advanced theories and their application to deflection calculations.- The elementary theories of torsion and bending are based on assumptions which are usually violated in actual wing structures. The elementary torsion theory is valid only for a shell of constant section, subjected to a torque at each end in the form of a shear flow that is distributed along the perimeter in accordance with the theory and that leaves the end sections free to warp out of their original planes. An actual wing has a variable section and is subjected to distributed torque loads; as a result, the tendency to warp differs from section to section, and secondary stresses are set up by the resulting interference effects. Similarly, the elementary bending theory is strictly valid only if the applied load is a pure bending moment. In actual wing structures, the bending moments are produced by transverse loads, and the shear strains in the covers produced by these loads violate the assumption that plane cross sections remain plane. As in the torsion case, interference effects between adjacent sections produce secondary stresses.

Stress theories that take these interference effects into account are unavoidably more complex and less general than the elementary stress theories. They necessarily make use of simplifying and restrictive assumptions, particularly regarding the cross sections, in order to keep the mathematical complexity within bounds. The effect of these assumptions on the accuracy of the calculations can be minimized (except in the regions around large cut-outs) by the following procedure:

(1) The elementary stresses are calculated for the actual cross sections.

(2) The secondary stresses produced by the interference effects are calculated using cross sections simplified as much as necessary or desirable.

In conventional wing structures with reasonably uniform loading (constant sign of bending or torsional moment along span), adequate accuracy can often be obtained even when highly simplified cross sections are used. This remark applies to stress calculations and even more forcefully to deflection calculations, because any stipulated accuracy of the deflections can be achieved with a lower order of accuracy in the stresses. Although this fact is quite well known it will be demonstrated later by means of an example for the torsion case as well as for the bending case.

Advanced stress theories of torsion and bending in shells have been developed by a number of authors, striking different compromises between accuracy, complexity, and generality. The stress theories selected in the present paper as basis for calculating the deflections are those of references 1 and 2. In references 3 and 4, these theories have been shown to be reasonably adequate for stress analysis, and consequently they are amply accurate for the deflection analysis of conventional structures.

TORSION ANALYSIS

Discussion of fundamental case.- The structure that will be discussed as fundamental example is a box of doubly symmetrical rectangular cross section as shown in figure 2(a), with infinitely closely spaced rigid bulkheads, built-in rigidly at one end and subjected to a torque T at the free end. (See fig. 2(b).) The cross section is an idealized one, that is, the walls are assumed to carry only shear stresses.

According to the elementary theory, the shear stresses in this box would be

$$\tilde{\tau}_b = \frac{T}{2bht_b} \tag{5}$$

and

$$\tilde{\tau}_h = \frac{T}{2bht_h} \tag{6}$$

and the angle of twist would be

$$\tilde{\varphi} = \frac{Tx}{GJ} \tag{7}$$

where

$$J = \frac{2b^2h^2}{\frac{b}{t_b} + \frac{h}{t_h}} \tag{8}$$

According to the theory of torsion bending (reference 1), the largest deviations from the elementary theory are found at the root because warping is prevented entirely at this station. The shear stresses at the root can be written in the form

$$\tau_b = \tilde{\tau}_b(1 - \eta) \tag{9}$$

$$\tau_h = \tilde{\tau}_h(1 + \eta) \tag{10}$$

where

$$\eta = \frac{\frac{b}{t_b} - \frac{h}{t_h}}{\frac{b}{t_b} + \frac{h}{t_h}} \tag{11}$$

The terms $\tilde{\tau}_b\eta$ (or $\tilde{\tau}_h\eta$) represent correction terms that must be added to the stresses $\tilde{\tau}_b$ (or $\tilde{\tau}_h$) computed by the elementary theory in order to obtain the true stresses. In wing boxes, h/t_h is usually much smaller than b/t_b, and η is consequently only little less than unity. The correction terms are therefore nearly as large as the stresses calculated by the elementary theory and are thus obviously important.

The fundamental relations given in reference 1 permit the derivation of a differential equation for the angle of twist, which appears as a function of the torsion-bending parameter

$$K = \sqrt{\frac{8G}{AE\left(\frac{b}{t_b} + \frac{h}{t_h}\right)}} \tag{12}$$

Boxes approximating the proportions found in wings have a length L such that it is permissible to set

$$\tanh KL \approx 1$$

For such proportions, the solution of the differential equation takes the form

$$\varphi = \tilde{\varphi}\left[1 - \frac{\eta^2}{Kx}\left(1 - e^{-Kx}\right)\right] \tag{13}$$

The angle of twist is plotted in figure 3, with η taken as unity for simplicity. It is apparent that the correction to the elementary theory, in regions not close to the root, is approximately a constant. At the tip, with $e^{-Kx} \approx 0$,

$$\varphi_{tip} = \tilde{\varphi}_{tip}\left(1 - \frac{\eta^2}{KL}\right) \tag{14}$$

For conventional wings, KL is of the order of 10, and the correction term that must be added to the tip twist calculated by the elementary theory would therefore amount to about 10 percent if the wing were of constant section and if the torque were applied at the tip. Actual wings are tapered and carry a distributed torque, but these two deviations from the simple case tend to offset each other in their influence on the twist curve; the calculation just made may therefore serve as a rough indication of the order of magnitude of the twist correction. A stipulated maximum error of 2 percent in the tip twist - which is about the best that can be reasonably expected - can therefore be achieved with a permissible error of about 20 percent in the twist correction. The use of highly simplified cross sections for the calculation of the twist correction is thus justified in general.

Simplification of cross sections.- The simplified cross section (fig. 2) corresponding to an actual cross section such as shown in figure 1 is obtained as follows:

(1) The thicknesses of the top and bottom cover t_{b_T} and t_{b_B}, respectively, are averaged by the formula

$$\frac{1}{t_b} = \frac{1}{2}\left(\frac{1}{t_{b_T}} + \frac{1}{t_{b_B}}\right)$$

This method of averaging is indicated by the consideration that a unit length dx of the two covers of thickness t_b should absorb

the same amount of internal work as a unit length of the two actual covers with the thicknesses t_{b_T} and t_{b_B}, respectively, or

$$2\frac{q^2}{t_b}b\ dx = \frac{q^2}{t_{b_T}}b\ dx + \frac{q^2}{t_{b_B}}b\ dx$$

In the same manner, average values of t_h, h, A_{ST}, and A_{CF} are obtained.

(2) The cross-sectional area A of the idealized corner flange is obtained by the formula

$$A = A_{CF} + f_1 h t_h + f_2 A_{ST} \tag{15}$$

On the basis of the usual assumption that the chordwise distribution of the bending (normal) stresses due to torsion is linear,

$$f_1 = f_2 = \frac{1}{6}$$

Shear-lag effects produce deviations from the linear stress distributions and reduce the factors below the value of one-sixth. The theory of these effects is inadequate at present, and experimental data are scarce. In particular, little information exists on the effects of taper, which appear to be powerful. On the basis of such experimental data as exist, it is tentatively suggested that the following values be used:

$$\left.\begin{aligned} f_1 &= \frac{1}{6} \\ f_2 &= 0.066 + 0.01 \times 2\alpha \qquad (2\alpha < 10^\circ) \\ f_2 &= 0.166 \qquad\qquad\qquad\quad (2\alpha \geqq 10^\circ) \end{aligned}\right\} \tag{15a}$$

where 2α is the total taper angle of the cover in degrees. Formulas (15a) are probably always sufficiently accurate for deformation analysis, but may be inadequate sometimes for stress analysis.

Calculation of twist correction.- After simplification of the cross sections, the torsion box appears in the form shown in figure 4(a). Within each bay, the cross section is assumed to be constant, and the torques are assumed to be applied at the bulkheads. The bulkheads considered are those that have an effective shear stiffness $G_e t$ of the same order of magnitude as that of the cover sheet.

Each cell of the box is subjected to a known torque and to constraining forces arising from the two adjacent cells. The constraining forces form self-equilibrated groups of four forces X (fig. 4(b)). The magnitudes of the X-forces at the (bulkhead) stations are calculated from a set of equations as explained in reference 1 and summarized for convenience in appendix A.

Cell n is subjected to the action of group X_{n-1} at the outboard end and group X_n at the inboard end. By the method of internal work, it can readily be shown (reference 5) that these two groups of forces twist the outboard bulkhead $n-1$ with respect to the inboard bulkhead n through an angle

$$\Delta\varphi_n = -\frac{1}{2bhG}\left(\frac{b}{t_b} - \frac{h}{t_h}\right)\left(X_n - X_{n-1}\right) \tag{16}$$

The quantity $\Delta\varphi_n$ is the twist correction for cell n; it is negative, that is, it reduces the twist calculated by the elementary theory, when $X_n > X_{n-1}$, which is the normal case. The final angle of twist of bulkhead n with respect to the root bulkhead r is

$$\varphi_n = \int_r^n d\tilde{\varphi} + \sum_{n=r}^{n=n+1} \Delta\varphi_n \tag{17}$$

In a wing having no cut-outs and carrying no large concentrated torques, the only X-group of appreciable magnitude appears at the root station. If all other groups are assumed to be zero, the system of equations for determining them (appendix A) degenerates into the single equation

$$\left(p_r + \frac{d}{A_c t E}\right)X_r = w_r^T \tag{18}$$

from which X_r can be found, and the twist correction for the root cell is

$$\Delta\varphi_r = -\frac{1}{2bhG}\left(\frac{b}{t_b} - \frac{h}{t_h}\right)X_r \tag{19}$$

The solution of equation (18) and the evaluation of expression (19) is often all that is necessary to obtain an adequate estimate of the twist correction for wings without large discontinuities of loading or cross section.

Cut-outs in torsion boxes.- A large cut-out in a torsion box is normally closed off by a bulkhead at each end. The cut-out bay considered as an independent structure can carry only a negligible torque, being an open section. However, when the cut-out bay is supplemented by at least one full bay at each end as indicated in figure 5(a), it can carry torques because each of the walls can then act as a beam bent in its own plane, the adjacent full bays furnishing the "foundations" for these beams.

By means of suitable simplifying assumptions, the problem of analyzing the three-bay structure of figure 5(a) can be reduced to one with a single statical redundancy as shown in reference 6. The redundancy chosen in this reference is a fraction k ("torque-division factor") that gives the part of the total torque carried by the vertical walls of the cut-out bay. The fraction lies between the limits $k = \frac{1}{2}$ (no cut-out) and $k = 1$ (full-width cut-out); for convenience, the formula for k given in reference 6 is reproduced in appendix B. The following formulas given herein can be deduced readily from the results given in the reference.

The magnitude of the X-group acting on each adjacent full bay at the junction with the cut-out bay is given by

$$X = \frac{Td}{bh}(2k - 1) \tag{20}$$

and consequently, by formula (16), each of these bays has a twist correction

$$\Delta\varphi_{fb} = \frac{Td}{2b^2h^2G}\left(\frac{b}{t_b} - \frac{h}{t_h}\right)(2k - 1) \tag{21}$$

where the subscript fb denotes full bay. It should be noted that the correction is positive, that is, the twist of a full bay is increased by an adjacent cut-out bay.

The relative twist between the end bulkheads of the cut-out bay can be written in the same form as that for full bays

$$\varphi_{co} = \tilde{\varphi}_{co} + \Delta\varphi_{co} \tag{22}$$

where the subscripts co denote cut-out bay. The "elementary" twist $\tilde{\varphi}_{co}$ is the twist that results from the deformations of the members of the cut-out bay when the end bulkheads are prevented from warping out of their planes; the walls then act as beams restrained by end moments in such a manner that the tangents to the elastic curve at the two ends of each beam remain parallel. The twist correction $\Delta\varphi_{co}$ is the twist that would result if the members of the cut-out bay were rigid and the end bulkheads were warped out of their planes, the amount of warping being determined by the torque T and the X-group acting between the cut-out bay and the adjacent full bay.

Application of the method of internal work to the stresses given in reference 6 yields for the elementary twist

$$\tilde{\varphi}_{co} = \frac{T}{bh}\left\{\frac{2(1 - k)^2 d}{Gt_{bl}h} + \frac{4k^2 d}{Gt_{hl}b} + \frac{(1 - k)^2 bd}{Gt_c hc}\right.$$

$$\left. + \frac{(1 - k)^2 bd^3}{3EA_1 hc^2} + \frac{d^3}{3EA_2 bh}\left[2k - \frac{b}{c}(1 - k)\right]^2 + \frac{4(2k - 1)^2 d^3}{3EA_3 bh}\right\} \tag{23}$$

For a full-width cut-out, $k = 1$, and all the terms containing $(1 - k)$ disappear.

From the geometry of the structure, the twist correction for one-half of the cut-out bay (from the midpoint to a bulkhead) is

$$\frac{1}{2}\Delta\varphi_{co} = \frac{4d}{bh}\left(w^T + w^X\right)$$

which may be written

$$\frac{1}{2}\Delta\varphi_{co} = \frac{1}{2}\Delta\varphi_{co}^{T} + \frac{1}{2}\Delta\varphi_{co}^{X}$$

By Maxwell's reciprocal theorem, or by direct comparison of the formulas, and by use of formula (A3) of appendix A, it can be seen that

$$\frac{1}{2}\Delta\varphi_{co}^{T} = \Delta\varphi_{fb}$$

By definition

$$w^{X} = pX$$

where p is the coefficient given by formula (A1) of appendix A, and X is given by formula (20). The twist correction for the entire length of the cut-out bay can therefore be written in the form

$$\Delta\varphi_{co} = 2\Delta\varphi_{fb} + \frac{8d}{bh}pX \tag{24}$$

In order to be consistent with all assumptions made, the torque used in evaluating formulas (22) to (24) should be the torque acting in the cut-out bay. The values of T for the two adjacent full bays, however, should be calculated for the torques actually acting in these bays.

When the cut-out is small, no closing bulkheads are provided in general. In this case, the changes in stress distribution will be confined to the cover area surrounding the cut-out (fig. 6). For purposes of calculating deflections, the stress distribution may be approximated by assuming that the shear flow in the regions with double cross-hatching is equal to zero, while the shear flow in cross-hatched regions is twice the shear flow that would exist if there were no cut-out. The angle of twist between the end stations B can then be calculated by equating the external work done by the applied torque to the internal work. The following equivalent procedure is convenient for practical application.

The actual sheet thickness t_b in the regions B-A and A-B of figure 6 is replaced by an effective thickness t_{b_e}, and the actual sheet of thickness t_c in the region A-A is replaced by an effective sheet having a thickness t_{c_e} and extending unbroken over the full width of the section from the front shear web to the rear one. The "effective sheet" carries a uniform shear flow because it contains no cut-out. The effective thicknesses are calculated from the condition that the internal work absorbed by the fictitious sheet carrying the uniform shear flow q must be equal to the internal work absorbed by the actual sheet carrying the nonuniform shear flow described in the preceding paragraph. For the region A-A of the cut-out, the condition is

$$\frac{q^2}{t_{c_e}}bd = \frac{q^2}{t_c}(2c - w)\ d + \frac{4q^2}{t_c}wd$$

which yields the relation

$$\frac{t_{c_e}}{t_c} = \frac{1}{1 + \frac{2w}{b}} \tag{25}$$

For the regions B-A and A-B, an identical relation results

$$\frac{t_{b_e}}{t_b} = \frac{1}{1 + \frac{2w}{b}}$$

The torsion constant J of the box with cut-out can be calculated by the standard formula for a box without cut-out, using the thickness t_{c_e} in the region A-A and the thickness t_{b_e} in the regions B-A and A-B.

The method described for small cut-outs can probably be applied without serious error as long as neither the width nor the length of the cut-out exceeds one-half the width of the box.

Numerical examples for boxes with and without cut-outs are given in appendix C.

BENDING ANALYSIS

Discussion of fundamental case.- When a wing section such as that shown in figure 1 is subjected to vertical loads producing bending, shear stresses will arise in the cover sheets. The elementary bending theory neglects the strains produced by these shear stresses; the so-called shear-lag theories are refined theories of bending in which the effects of these strains are taken into account. The engineering theory of shear lag developed in reference 4 is based on the use of simplified cross sections such as that shown in figure 7. A beam with such a cross section may be used, therefore, as example to illustrate the relative importance of shear-lag effects on stresses and on deflections. In order to keep the formulas as simple as possible, the discussion will be confined to a cantilever beam of constant section, fixed to a rigid abutment and subjected to a vertical load P at the tip of each shear web.

Reference 7 shows that the analytical solution of the stress problem for such a beam is characterized by the shear-lag parameter

$$K = \sqrt{\frac{Gt}{Eb_s}\left(\frac{1}{A_F} + \frac{1}{A_L}\right)} \tag{26}$$

which plays a similar role in the advanced bending theory as the torsion-bending parameter K given by expression (12) in the advanced torsion theory. The analytical formulas for the stresses in the flange, in the central stringer, and in the cover sheet are, respectively,

$$\sigma_F = \tilde{\sigma}\left(1 + \frac{A_L \sinh Kx}{A_F Kx \cosh KL}\right) \tag{27}$$

$$\sigma_L = \tilde{\sigma}\left(1 - \frac{\sinh Kx}{Kx \cosh KL}\right) \tag{28}$$

$$\tau = \tilde{\tau}\left(1 - \frac{\cosh Kx}{\cosh KL}\right) \tag{29}$$

with

$$\tilde{\sigma} = \frac{Mc}{I} = \frac{M}{hA_T} \tag{30}$$

$$\tilde{\tau} = \frac{PQ}{It} = \frac{PA_L}{htA_T} \tag{31}$$

where t is the thickness of the cover sheet and $A_T = A_F + A_L$.

For conventional wing structures $\tanh KL \approx 1$ and with this simplification the stresses at the root of the beam can be written in the form

$$\sigma_F = \tilde{\sigma}\left(1 + \frac{A_L}{A_F KL}\right) \tag{32}$$

$$\sigma_L = \tilde{\sigma}\left(1 - \frac{1}{KL}\right) \tag{33}$$

$$\tau = 0$$

The deflection at the tip can be calculated from the work equation

$$\frac{1}{2}P\delta = \int_0^L \frac{\sigma_F^2}{2E} A_F \, dx + \int_0^L \frac{\sigma_L^2}{2E} A_L \, dx + \int_0^L \frac{\tau^2}{2G} b_S t \, dx \tag{34}$$

If σ_F as well as σ_L are assumed to have the value given by the elementary theory, and the modulus G is assumed to be infinite, consistent with the basic assumption of the elementary theory that plane sections remain plane, the integration of equation (34) yields the familiar formula

$$\tilde{\delta} = \frac{PL^3}{3EI} = \frac{2PL^3}{3Eh^2A_T} \tag{35}$$

If the values of σ_F, σ_L, and τ given by formulas (27), (28), and (29), respectively, are substituted into equation (34), the result of the integration is

$$\delta = \frac{PL^3}{3EI}\left[1 + \frac{3A_L}{A_F(KL)^2}\left(1 - \frac{\tanh KL}{KL}\right)\right] \tag{36}$$

This expression shows that the shear-lag correction to the elementary deflection contains terms in $\left(\frac{1}{KL}\right)^2$ and $\left(\frac{1}{KL}\right)^3$, whereas the stress corrections to σ_F and σ_L contain only terms in $\frac{1}{KL}$. The deflection correction is therefore of the next higher order in $\frac{1}{KL}$ than the stress correction, a fact that justifies the use of less accurate stress formulas for deflection analysis than are necessary for stress analysis.

This conclusion can be corroborated by the following calculation. If σ_F and σ_L are taken to have the elementary value $\tilde{\sigma}$, τ the elementary value $\tilde{\tau}$, and the modulus G is assumed to have its actual finite value (although this is strictly speaking inconsistent with the basic assumption of the elementary theory), the integration of equation (34) yields the result

$$\delta = \frac{PL^3}{3EI}\left(1 + \frac{3A_L}{A_F(KL)^2}\right) \tag{37}$$

This expression differs from the "exact" expression (36) only by a term in $\left(\frac{1}{KL}\right)^3$, or in other words, the work equation (34) will give the deflection correctly up to terms in $\left(\frac{1}{KL}\right)^2$ if the stresses used are those of the elementary theory instead of those of the shear-lag theory, provided that shear strain energy is not neglected as is done in the elementary theory.

For conventional wing structures, KL is of the order of 10. If $\frac{A_F}{A_L} = 1$, the shear-lag correction to the elementary tip deflection is then very nearly 3 percent as shown by formula (36). For a

uniformly distributed load, the correction would be twice as large, or 6 percent. If $A_F > A_L$ (heavy spar caps, light stringers), the correction is small and may be practically negligible; however, if the spar caps are light $(A_F < A_L)$, the correction is of some practical importance.

Simplification of cross sections.- In wing structures, shear-lag action is appreciable only for vertical loads; consequently, the discussion will be confined to vertical loads.

According to the shear-lag theory given in references 2 and 4, the cross sections are simplified to the form indicated in figure 7. Only one cover is analyzed at a time; this fact is indicated symbolically in figure 7 by omitting the cover not being analyzed at the time (lower cover). The cross-sectional areas A_F and A_L in figure 7 are defined by

$$A_F = A_{CF} + \frac{1}{6}ht_h$$

$$A_L = \frac{1}{2}A_{ST}$$

The width b_S is taken as one-fourth of the actual width b between spars. (Note that in references 2, 4, and 7, the symbol b denoted the half-width between spars.) The cross section is made symmetrical about the vertical centerline by using average values of h and A_F.

Calculation of deflection corrections in wings without cut-outs.- The box is divided into bays numbered as shown in figure 4(a). Within each bay, the cross section is assumed to be constant, and the loads are assumed to be applied at the stations dividing the bays. The bulkheads play no role in the shear-lag problem, and the bays may therefore be chosen in any convenient manner; it is usually advantageous to use short bays in the regions near the root and near large discontinuities of loading or cross section, and long bays in the remaining part of the box. On account of symmetry, only half-sections are considered as indicated by the full lines in figure 7.

As a result of interaction between bays, self-equilibrated groups of X-forces appear (fig. 8). The method of calculating these forces is similar to that shown in appendix A for the torsion-bending forces and is summarized in reference 2.

The X-forces applied to the corner flanges cause stresses

$$\Delta\sigma_F = \frac{X}{A_F} \tag{38}$$

which constitute the shear-lag stress corrections to the elementary stresses. At any given station, the stress $\Delta\sigma_F$ causes a curvature of the elastic line

$$\frac{1}{R_2} = \frac{\Delta\sigma_F}{Eh} \tag{39}$$

which must be added to the curvature $1/R_1$ caused by the elementary stresses $\tilde{\sigma}$ that is given by formula (4).

One possible procedure for deflection analysis is, therefore, to plot the spanwise curves of $\frac{\Delta\sigma_F}{Eh}$ for the upper and the lower cover, add these two curves to the M/EI curve, and integrate in the familiar manner to obtain the total deflections $(\tilde{\delta} + \delta_1)$. In practice, it may be preferable to plot only the sum of $\frac{\Delta\sigma_F}{Eh}$ for the upper and lower cover and to integrate the resultant curve in order to obtain separately the excess deflection δ_1 caused by shear lag; these deflections can then be added to those calculated by the elementary theory. As previously mentioned, the deflections δ_2 caused by shear strain of the webs can be calculated independently and added as additional corrections when necessary.

In shell wings having no large discontinuities of cross section or loading, the shear-lag effect is concentrated in the region of the root and depends chiefly on the characteristics of the cross section and the loading in the root bay. Simple approximations can then be used for the stress corrections in the root region, and the corresponding formulas for the deflection corrections may be used for the purpose of making a quick estimate. In conventional wing structures, the estimate will generally show the deflection corrections to be so small that a more elaborate calculation is not warranted.

A cross section at $x = \frac{b}{2}$ from the root may be considered as representative of the root region, and the shear-lag parameter K is computed for this section by formula (26). If $KL > 6$, a condition

which will be fulfilled in practically all conventional wings, and if the loading is reasonably uniform, the stress correction can be written in the form

$$\Delta\sigma_F \approx \frac{S_W A_L e^{-Kx}}{h A_T A_F K(1 + Kd)} \tag{40}$$

where d is the half-length of the carry-through bay and all quantities appearing in the fraction (except x) are measured at the "representative" station. The factor e^{-Kx} gives the decrease of the correction with increasing distance from the root $(x = 0)$; within the carry-through bay, the correction may be assumed to have a constant value equal to the root value. Application of formula (39) and approximate integration consistent with the order of accuracy of formula (40) gives the deflection correction for the tip of the beam

$$\delta_1 = \frac{S_W A_L L\left(1 + Kd - \frac{1}{KL}\right)}{h^2 E A_T A_F K^2 (1 + Kd)} \tag{41}$$

Because the correction is small, it will be sufficiently accurate to assume that it decreases linearly to zero at the station lying at a distance $1/K$ from the root. It should be noted that formula (41) gives the correction caused by shear-lag action only for one cover of the box. Also, A_F, K, and so forth, characterize the <u>half</u>-section; therefore, S_W must be taken as the shear force in <u>one</u> web.

If the stringers do not carry through at the root, the root section must be considered as a full-width cut-out, and the method described in the next section is applicable.

<u>Calculation of deflections for wings with cut-outs</u>.- The stress in a stringer interrupted by a cut-out drops to nearly zero at the edge of the cut-out (fig. 9) unless the cut-out is very small and extremely heavily reinforced. It is common practice to compute the stringer stresses near a cut-out by applying the ordinary bending theory to the cross section of the box after multiplying the cross-sectional areas of the stringers by an effectiveness factor. The procedure is simple and is well adapted to computing effective moments of inertia that are adequate in most cases for a deflection analysis by the standard procedure of integrating the M/EI curve.

The most severe type of cut-out is the full-width cut-out at the root of the wing, which is frequently encountered in practice in the form of a zero-length cut-out (stringers broken at the root joint) or in the form of a finite-length cut-out (wheel well or gas tank bay). Figure 10(a) shows a free-body diagram of the section of the cover between the outboard edge of the cut-out and a section A-A some distance farther out. Shear-lag calculations on typical wings show that the stringer stresses at the section A-A are reasonably close to those given by the elementary theory when the distance between the section A-A and the root is a rather small fraction of the semispan. Under these circumstances, the problem can be simplified by removing the edge shears and increasing the total force M/h at the section A-A to equal the force M/h at the root. The beam problem is thus reduced to the problem of the axially loaded panel (fig. 10(b)).

By definition, if the effective stringer area A_{L_e} were attached directly to the spar caps, the stress in the flange would be the same as in the actual structure. The equation defining A_{L_e} is therefore

$$\sigma_F A_{L_e} = \sigma_L A_L$$

or

$$\frac{A_{L_e}}{A_L} = \frac{\sigma_L}{\sigma_F} \tag{42}$$

By the shear-lag theory of reference 4, the values of σ_F and σ_L are computed for a substitute panel as shown in figure 11 $\left(\text{with } b_S = \frac{b}{4}\right)$. The formulas for such a panel are given in reference 7. Because the panel is assumed to be long enough to have a reasonably uniform chordwise distribution of stress at station A-A (fig. 10(b)), or $\sigma_F \approx \sigma_L$ at the corresponding station A-A of the substitute panel (fig. 11), the formulas may be simplified by assuming that the panel is very long. The formula for the stringer effectiveness then becomes

$$\frac{A_{L_e}}{A_L} = \frac{\sigma_L}{\sigma_F} = \frac{1 - e^{-Kx}}{1 + \frac{A_{L_e}}{A_F} e^{-Kx}} \tag{43}$$

where K is the shear-lag parameter defined by expression (26).

The effectiveness factor is plotted in figure 12 against the parameter

$$x' = \frac{x}{b}\sqrt{\frac{bt}{2A_L}\,\frac{G/E}{0.375}} = \frac{x}{b}\sqrt{\frac{bt}{A_{ST}}\,\frac{G/E}{0.375}}$$

In such a plot, the effectiveness factor depends only on the ratio A_F/A_L, and inspection of the figure shows that variation of this ratio changes the effectiveness appreciably only when A_F/A_L drops well below unity. This circumstance is fortunate, because it indicates that only small errors will result if the factor is applied to panels in which A_F varies rapidly or is not accurately known. The first contingency arises in practice in the structure under consideration here. The second contingency arises in the analysis of partial-width cut-outs, which will be discussed later.

At the end where the load is applied the edge member must carry the entire load. With increasing distance from the end, however, the load carried by the edge member decreases rapidly because the stringers take their share of the load. An edge member of constant section would therefore be inefficient, and in practice the member is strongly tapered. For the ideally tapered member (σ_F = constant), the ratio A_{L_e}/A_L is identical with that shown in figure 12 for $A_F/A_L \rightarrow \infty$. In an actual structure, the taper would probably be only an approximation to the ideal taper, but because the stringer effectiveness is evidently very insensitive to changes in the ratio A_F/A_L, the curve of A_{L_e}/A_L for $A_F/A_L \rightarrow \infty$ given in figure 12 is recommended for general use. The formula from which the curve is derived is

$$\frac{A_{L_e}}{A_L} = 1 - e^{-Kx}$$

where

$$K = \sqrt{\frac{Gt}{Eb_S A_L}} = \sqrt{\frac{8Gt}{EbA_{ST}}} \tag{43a}$$

If a cut-out is nearly full width, it is obviously permissible to consider all material that is continuous over the net section as being part of the corner flange; that is, shear-lag effects within

this region are neglected. Formula (43) can therefore be applied with the understanding that A_F means the cross-sectional area of all material not interrupted by the cut-out (upper part of fig. 13), A_L means the cross-sectional area of the material interrupted by the cut-out, and the substitute width b_S used to calculate K by formula (26) is taken as $w/4$. Alternatively, formula (43a) may be used to eliminate any consideration of A_F. The effective area A_{L_e} is assumed to be attached to the coaming stringer bordering the cut-out (lower part of fig. 13) for the purpose of computing the effective moment of inertia. As the cut-out becomes smaller and the net section wider, the assumption that shear lag in the continuous material may be neglected becomes more questionable. However, experimental results on axially loaded panels have shown (reference 8) that this assumption gives tolerable accuracy, even for stress analysis, except in very small cut-outs; it should, therefore, be adequate for deflection analysis in all cases, because the effect of a very small cut-out on the deflections is negligible.

A theoretical difficulty arises when the cut-out is so close to the root that there is appreciable interference between the stress disturbance produced by the cut-out and the disturbance caused by the root. This condition may be said to exist when the distance x between the root and the inboard edge of the cut-out is such that $Kx < 0.4$, where K is the shear-lag parameter defined by formula (24) for a section halfway between the root and the edge of the cut-out. For such cases, the following approximate procedure is suggested:

(1) Make allowance for the effect of the cut-out by determining the effective area A_{L_e} of the cut stringers as described in the preceding paragraph.

(2) If the stringers are continuous over the root joint, calculate the deflection correction for root effect on the assumption that no cut-out exists by one of the methods given for wings without cut-outs. In view of the uncertainty produced by the interference between cut-out effect and root effect, an estimate by means of formula (41) should be adequate. Multiply this deflection correction by the factor $\left(1 - \frac{w}{b}\right)$ to obtain the final correction.

If the stringers are broken at the root joint, apply the method given for a full-width cut-out to the substitute structure shown in the lower part of figure 13. This structure consists

of the actual spar flanges, the actual continuous stringers (including the coaming stringers), and the equivalent coaming stringers that replace the actual cut stringers. The total width of the net section $(b - w)$ is substituted for b in formula (43a), or in the expression for x' when figure 12 is used.

Fuselage analysis.- In fuselages, the root effects on bending or torsional deflections are probably always negligible. The effect of rectangular cut-outs may be dealt with by the same methods as those for wings if the cut-outs are reasonably small (windows or hatches). Special considerations may be necessary if the cut-outs are very large, particularly in the case of cargo doors in the side of the fuselage which increase primarily the deflection δ_2 of the shear web, and thus constitute a problem not treated herein.

Langley Memorial Aeronautical Laboratory
National Advisory Committee for Aeronautics
Langley Field, Va., May 15, 1947

APPENDIX A

Summary of General Procedure for Torsion-Bending Analysis of Wing

The wing is divided into bays by the main bulkheads, a main bulkhead being defined as one which has a shear stiffness Gt of the same order of magnitude as the top or bottom cover. The torque is assumed to be applied at the bulkheads. The bays are numbered as shown in figure 4(a).

Compute for each bay the coefficients

$$p_n = \frac{a}{3AE} + \frac{1}{8Ga}\left(\frac{b}{t_b} + \frac{h}{t_h}\right) \tag{A1}$$

$$q_n = -\frac{a}{6AE} + \frac{1}{8Ga}\left(\frac{b}{t_b} + \frac{h}{t_h}\right) \tag{A2}$$

$$w_n^T = \frac{T}{8Gbh}\left(\frac{b}{t_b} - \frac{h}{t_h}\right) \tag{A3}$$

In these expressions, a is the length of bay n, T is the (accumulated) torque in the bay, and the remaining dimensional terms are defined by figure 2.

The flange forces X (fig. 4(b)) produced by the interaction between adjacent bays are calculated from the set of equations

$$\left.\begin{array}{l}
-(p_1 + p_2)X_1 + q_2X_2 = -w_1^T + w_2^T \\
q_2X_1 - (p_2 + p_3)X_2 + q_3X_3 = -w_2^T + w_3^T \\
\cdots\cdots\cdots\cdots\cdots\cdots\cdots\cdots \\
q_nX_{n-1} - (p_n + p_{n+1})X_n + q_{n+1}X_{n+1} = -w_n^T + w_{n+1}^T \\
\cdots\cdots\cdots\cdots\cdots\cdots\cdots\cdots \\
q_rX_{r-1} - \left(p_r + \frac{d}{A_ctE}\right)X_r = -w_r^T
\end{array}\right\} \tag{A4}$$

The positive directions of T and X are defined by the arrows in figure 4(b).

APPENDIX B

Determination of Constant k for Torsion Box with Cut-Out

The constant k appearing in equations (20) to (22), which determines the division of the torque between the vertical walls and the horizontal walls, is determined by the formula

$$k = \frac{\sum_{1}^{10} c_n'}{\sum_{1}^{10} c_n} \tag{A5}$$

where

$$c_1 = \frac{4h}{t_{h1}} \qquad c_1' = 0$$

$$c_2 = \frac{2b}{t_{b1}} \qquad c_2' = c_2$$

$$c_3 = \frac{b^2}{ct_c} \qquad c_3' = c_3$$

$$c_4 = \frac{4bd}{at_{b2}} \qquad c_4' = \frac{1}{2}\left(1 + \frac{a}{d}\right)c_4$$

$$c_5 = \frac{4hd}{at_{h2}} \qquad c_5' = \frac{1}{2}\left(1 + \frac{a}{d}\right)c_5$$

$$c_6 = \frac{2bh}{dt_B}\left(1 + \frac{d}{a}\right)^2 \qquad c_6' = \frac{1}{2}c_6$$

$$c_7 = \frac{G}{3E}\frac{b^2d^2}{A_1c^2} \qquad c_7' = c_7$$

$$c_8 = \frac{G}{3E}\frac{d^2}{A_2}\left(2 + \frac{b}{c}\right)^2 \qquad c_8' = c_8\frac{b}{b + 2c}$$

$$c_9 = \frac{16G}{3E}\frac{d^2}{A_3} \qquad c_9' = c_9$$

$$c_{10} = \frac{32G}{3E}\frac{ad}{A_4} \qquad c_{10}' = \frac{1}{2}c_{10}$$

The dimensions appearing in these expressions are defined in figure 5. When the net section is very narrow, the

terms C_7 and C_8, C_7' and C_8' are replaced for greater convenience of computation by the terms

$$C_{7a} = \frac{Gb^2d^2}{3EI} \qquad C_{7a}' = C_{7a}$$

$$C_{8a} = \frac{4Gd^2}{3EA_2}\left(\frac{b + c}{c}\right) \qquad C_{8a}' = \frac{2G}{3E}\,\frac{bd^2}{A_2c}$$

where I is the moment of inertia of the net section (including the spar cap) considered as a beam being bent in the plane of the cover. When the coefficients C_7, C_8, C_7', and C_8' are used, an approximate allowance for the stringers in the net section should be made by adding one-sixth of their total area to the area of the coaming stringer as well as to the area of the spar cap in the cut-out bay.

APPENDIX C

Numerical Examples

The numerical examples will be based on the box shown in figure 14. In the calculations, G/E will be taken as 0.385 and G will be taken as 4×10^6 psi.

Example 1.- The box is loaded with a uniformly distributed torque of 400 pound-inches per inch. Find the angle of twist of the box.

The distributed torque loading is replaced by a series of concentrated torques, applied at the bulkheads and of such magnitude that the torque in each bay is equal to that produced in the middle of the bay by the distributed loading. The elementary twist $\tilde{\varphi}$ is computed by means of formulas (7) and (8) and is plotted in figure 15.

By formulas (15) and (15a)

$$A = 2.468 + \frac{1}{6} \times 10 \times 0.080 + 0.066\left(0.040 + \frac{0.15}{4}\right)60 = 2.908 \text{ sq in.}$$

Next, the coefficients p, q, and w^T are computed by formulas (A1), (A2), and (A3), respectively. In order to simplify the numbers, all coefficients are multiplied by G. Because $\left(T_{n+1} - T_n\right)$ is constant, only the difference $\left(w_{n+1}^T - w_n^T\right)$ need be computed in addition to the last coefficient w_r^T

$$p_n = \frac{0.385 \times 60}{3 \times 2.908} + \frac{1}{8 \times 60}\left(\frac{60}{0.040} + \frac{10}{0.080}\right) = 6.033$$

$$q_n = -\frac{0.385 \times 60}{6 \times 2.908} + \frac{1}{8 \times 60}\left(\frac{60}{0.040} + \frac{10}{0.080}\right) = 2.061$$

$$w_{n+1}^T - w_n^T = \frac{400 \times 60}{8 \times 60 \times 10}\left(\frac{60}{0.040} - \frac{10}{0.080}\right) = 6875$$

$$w_r^T = w_5^T = 4.5\left(w_{n+1}^T - w_n^T\right) = 30,937$$

$$\frac{dG}{A_c t^E} = \frac{25 \times 0.385}{2.098} = 3.310$$

Substitution of the foregoing terms into (A4) yields the following set of equations

$$\begin{aligned}
-12.066X_1 + 2.061X_2 &= 6875 \\
2.061X_1 - 12.066X_2 + 2.061X_3 &= 6875 \\
2.061X_2 - 12.066X_3 + 2.061X_4 &= 6875 \\
2.061X_3 - 12.066X_4 + 2.061X_5 &= 6875 \\
2.061X_4 - 9.343X_5 &= -30,937
\end{aligned}$$

The solution of these equations is

$$\begin{aligned}
X_1 &= -709 \text{ pounds} \\
X_2 &= -816 \\
X_3 &= -732 \\
X_4 &= -134 \\
X_5 &= 3282
\end{aligned}$$

By formula (16)

$$\Delta\varphi_1 = -\frac{1}{2 \times 60 \times 10 \times 4 \times 10^6}\left(\frac{60}{0.040} - \frac{10}{0.080}\right)(-709 - 0) = 203 \times 10^{-6} \text{ radians}$$

$$\Delta\varphi_2 = 31 \times 10^{-6}$$

$$\Delta\varphi_3 = -24 \times 10^{-6}$$

$$\Delta\varphi_4 = -171 \times 10^{-6}$$

$$\Delta\varphi_5 = -979 \times 10^{-6}$$

These corrections are added to the elementary twist $\tilde{\varphi}$ to obtain the twist φ shown in figure 15.

Example 2.- The box is loaded as in example 1. Find the angle of twist of the box considering all twist corrections negligible except those for the root bay.

By solving equation (18)

$$X_5 = \frac{30,937}{6.033 + 3.310} = 3311 \text{ pounds}$$

$$\Delta\varphi_5 = -\frac{1}{2 \times 60 \times 10 \times 4 \times 10^6}\left(\frac{60}{0.040} - \frac{10}{0.080}\right)3311 = -948 \times 10^{-6} \text{ radians}$$

The twist φ computed by adding this correction to the elementary twist $\tilde{\varphi}$ is also shown in figure 15.

Example 3.- The box has a full-width cut-out in the top cover of bay 3. It is loaded as in example 1. Find the angle of twist of the box considering all twist corrections to be negligible except those for the root bay, the cut-out bay, and the bay on either side of the cut-out bay.

The torque-division factor, which must normally be computed by means of formula (A5), is $k = 1$ for a full-width cut-out.

With the definitions of figure 5(b)

$$A_3 = 2.908 \text{ sq in. (from example 1)}$$

$$A_2 = 2.468 + \frac{1}{6} \times 10 \times 0.080 = 2.601 \text{ sq in.}$$

By formula (21)

$$\Delta\varphi_2 = \frac{60,000 \times 30}{2 \times 60^2 \times 10^2 \times 4 \times 10^6}\left(\frac{60}{0.040} - \frac{10}{0.080}\right)(2 - 1) = 859 \times 10^{-6} \text{ radians}$$

$$\Delta\varphi_4 = \Delta\varphi_2$$

By formulas (24) and (20) and by taking the value of p from example 1

$$\Delta\varphi_3 = \Delta\varphi_{co} = 2 \times 859 \times 10^{-6} + \frac{8 \times 30}{60 \times 10} \times \frac{6.033}{4 \times 10^6} \times \frac{60,000 \times 30}{60 \times 10}$$

$$= 3527 \times 10^{-6} \text{ radians}$$

From example 2

$$\Delta\varphi_5 = -948 \times 10^{-6} \text{ radians}$$

By formula (23), taking $1/G$ outside the bracket,

$$\tilde{\varphi}_3 = \frac{60,000}{60 \times 10 \times 4 \times 10^6}\left(\frac{4 \times 30}{0.080 \times 60} + \frac{0.385 \times 30^3 \times 2^2}{3 \times 2.601 \times 60 \times 10}\right.$$

$$\left. + \frac{0.385 \times 4 \times 30^3}{3 \times 2.908 \times 60 \times 10}\right) = 1046 \times 10^{-6} \text{ radians}$$

The twist of the box obtained by adding the elementary twists and the corrections is shown in figure 16. For comparison, the twist of the box without cut-out (example 2) is also shown.

Example 4.- The beam of figure 14 is loaded by a distributed vertical load of w = 50 pounds per inch applied along the elastic axis. Calculate the tip deflection including shear-lag correction.

The simplified cross section is defined by

$$A_F = 2.468 + \frac{1}{6} \times 10 \times 0.080 = 2.601 \text{ sq in.}$$

$$A_L = \frac{1}{2}(60 \times 0.040 + 14 \times 0.15) = 2.25 \text{ sq in.}$$

$$A_T = 4.851 \text{ sq in.}$$

By formula (26)

$$K = \left[\frac{0.385 \times 0.040}{15}\left(\frac{1}{2.601} + \frac{1}{2.25}\right)\right]^{1/2} = 0.02917$$

$$KL = 0.02917 \times 300 = 8.751$$

$$Kd = 0.02917 \times 25 = 0.729$$

$$I = \frac{A_T h^2}{2} = \frac{4.851 \times 100}{2} = 242.55 \text{ in.}^4$$

By elementary theory

$$\tilde{\delta} = \frac{wL^4}{8EI} + \frac{wdL^3}{2EI} = \frac{wL^3}{2EI}\left(\frac{L}{4} + d\right)$$

$$= \frac{1}{2} \times \frac{50 \times 300^3}{2 \times 10.4 \times 10^6 \times 242.55}\left(\frac{300}{4} + 25\right) = 13.38 \text{ in.}$$

The shear force in one web at the distance b/2 from the root is

$$S_W = \frac{1}{2} \times 50 \times 270 = 6750 \text{ pounds}$$

By formula (41), taking into account both covers

$$\delta_1 = 2\left[\frac{6750 \times 2.25 \times 300(1 + 0.0729 - 0.1143)}{100 \times 10.4 \times 10^6 \times 4.851 \times 2.601 \times 0.000851(1 + 0.729)}\right]$$

$$= 0.762 \text{ in.}$$

or 5.7 percent of $\tilde{\delta}$. A more accurate calculation of δ_1 would be pointless because the gain in accuracy would be less than the probable accuracy of $\tilde{\delta}$.

REFERENCES

1. Kuhn, Paul: A Method of Calculating Bending Stresses Due to Torsion. NACA ARR, Dec. 1942.

2. Kuhn, Paul: A Procedure for the Shear-Lag Analysis of Box Beams. NACA ARR, Jan. 1943.

3. Kuhn, Paul: The Influence of Bulkhead Spacing on Bending Stresses Due to Torsion. NACA ARR, May 1942.

4. Kuhn, Paul, and Chiarito, Patrick T.: Shear Lag in Box Beams - Methods of Analysis and Experimental Investigations. NACA Rep. No. 739, 1942.

5. Ebner, Hans: Torsional Stresses in Box Beams with Cross Sections Partially Restrained against Warping. NACA TM No. 744, 1934.

6. Kuhn, Paul, and Moggio, Edwin M.: Stresses around Large Cut-Outs in Torsion Boxes. NACA TN No. 1066, 1946.

7. Kuhn, Paul: Approximate Stress Analysis of Multistringer Beams with Shear Deformation of the Flanges. NACA Rep. No. 636, 1938.

8. Kuhn, Paul, Duberg, John E., and Diskin, Simon H.: Stresses around Rectangular Cut-Outs in Skin-Stringer Panels under Axial Loads - II. NACA ARR No. 3J02, 1943.

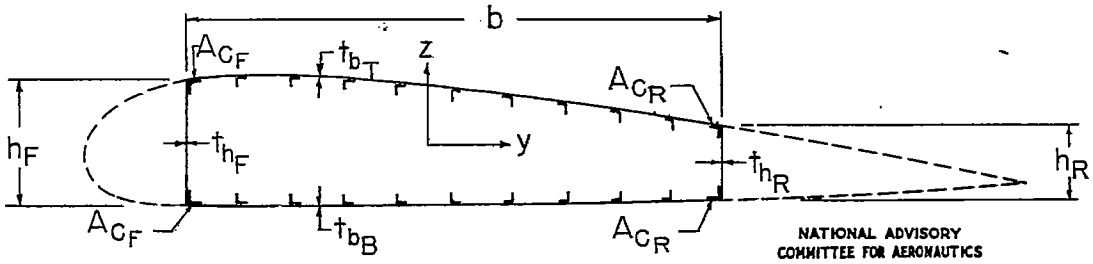

Figure 1.- Cross section of actual wing.

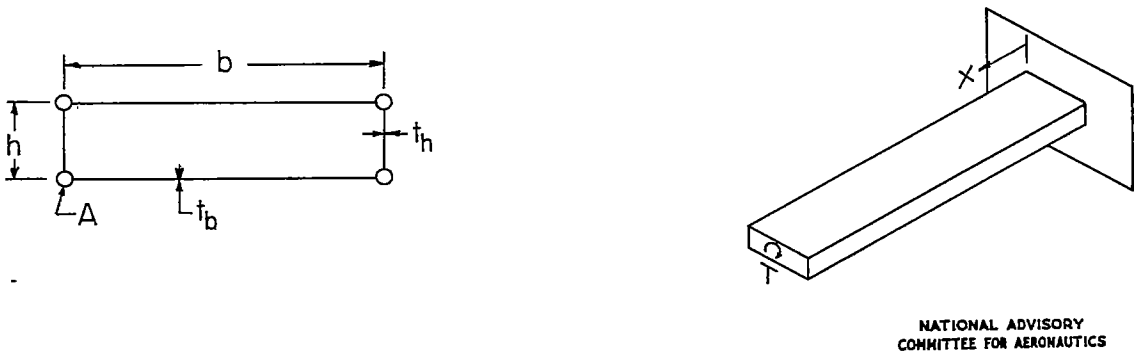

Figure 2.- Idealized Structure.

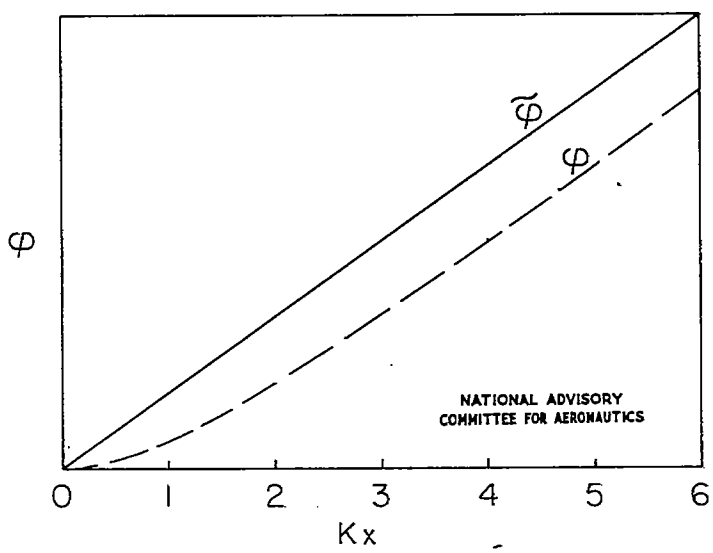

Figure 3.- Elementary twist $\tilde{\varphi}$ and actual twist φ of box beam with tip torque.

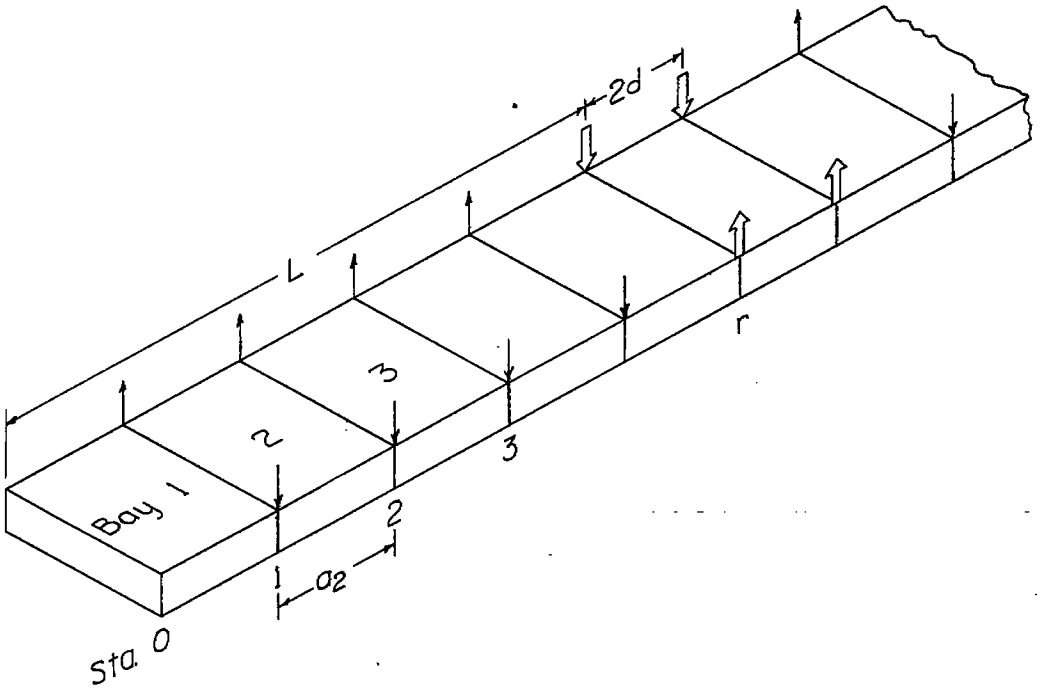

(a) Convention for numbering stations and bays.

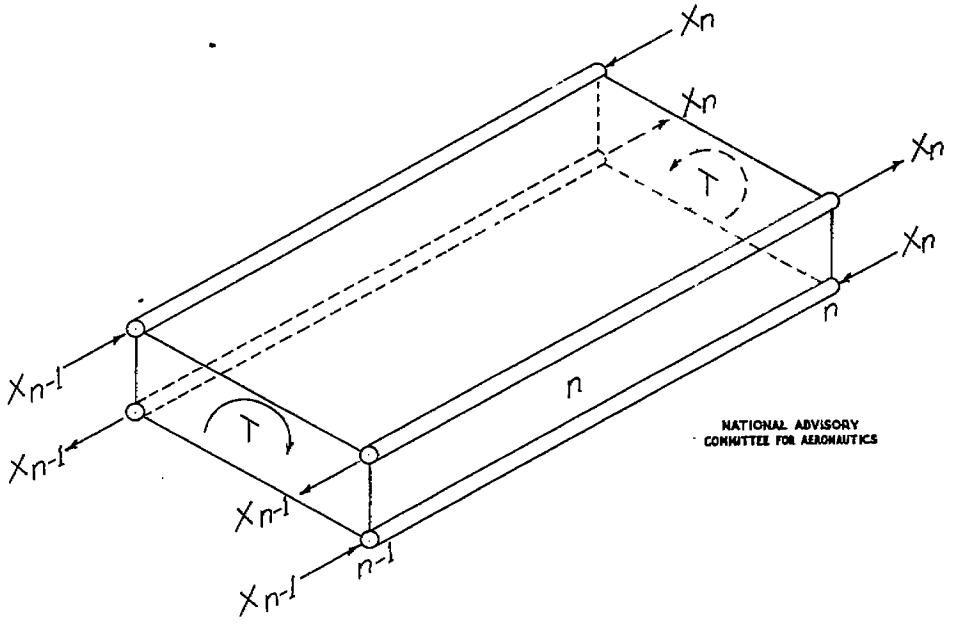

(b) Convention for positive forces acting on a bay.

Figure 4.- Convention for signs and numbering.

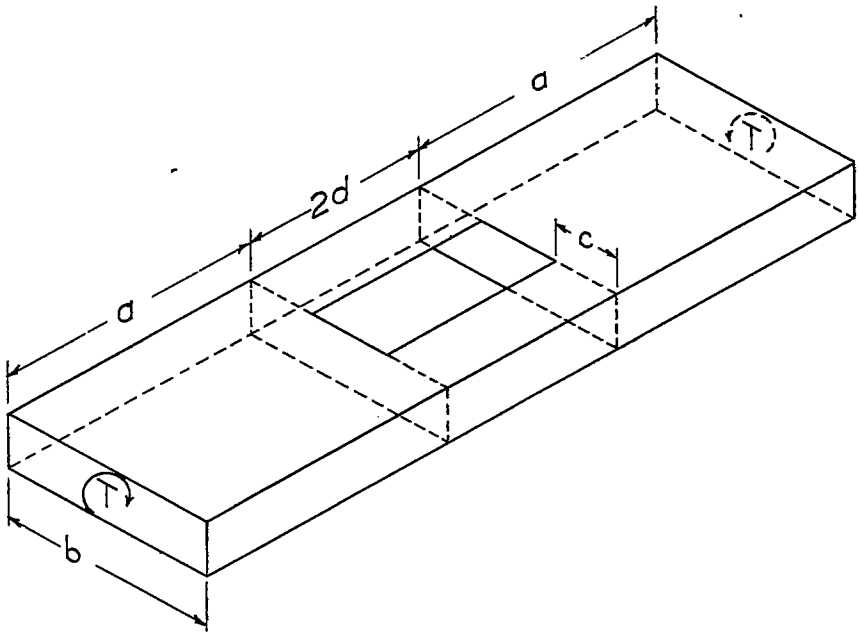

(a) General assembly.

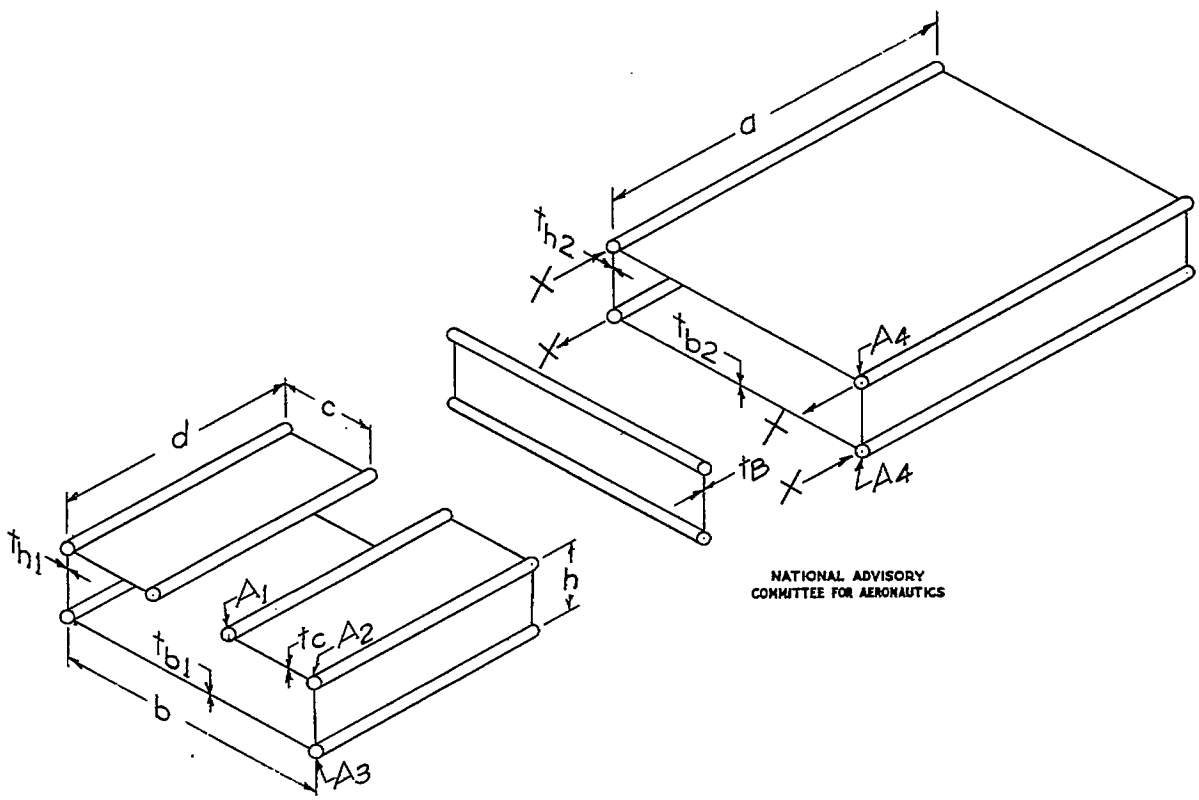

(b) Exploded view of half - structure.

Figure 5.- Three-bay structure with cut-out bay.

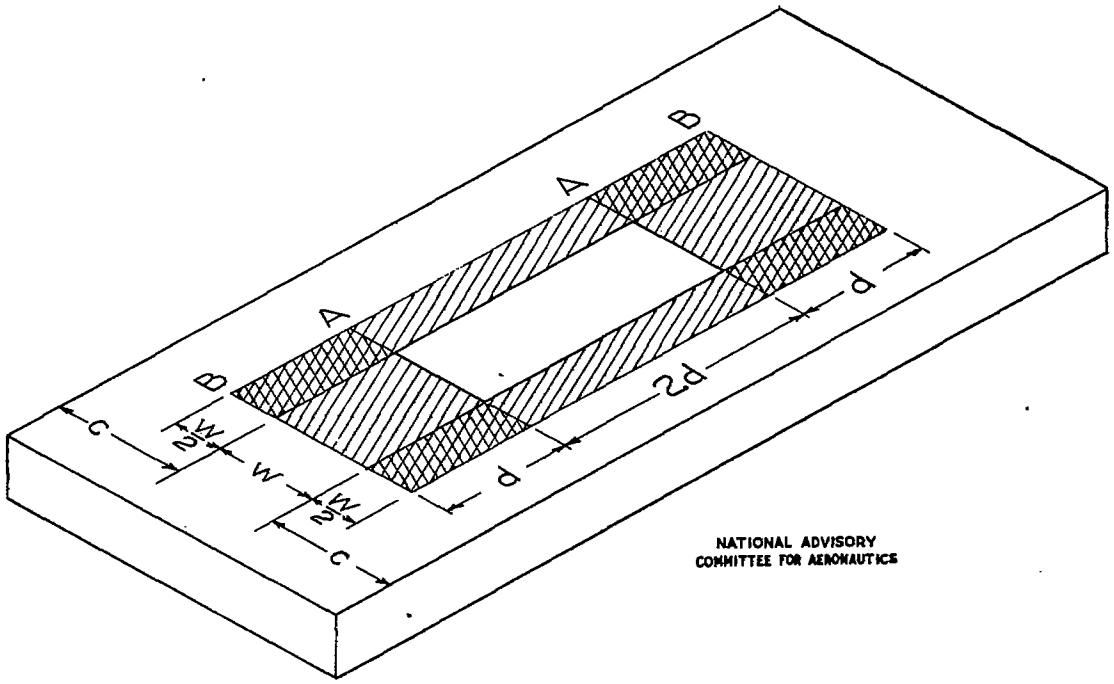

Figure 6.- Bay with small cut-out.

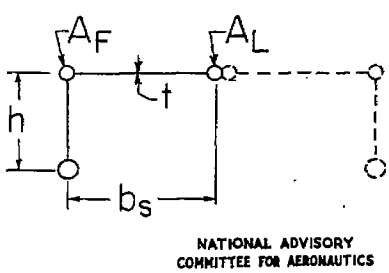

Figure 7.- Cross section of box idealized for shear-lag calculation.

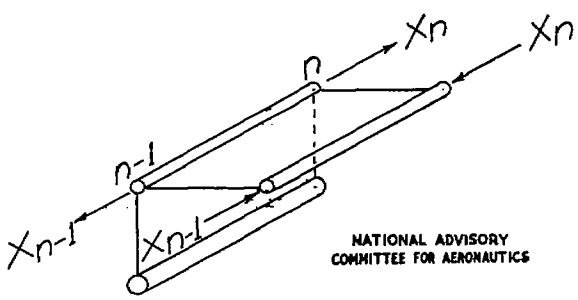

Figure 8.- Positive X-groups caused by shear lag acting on a bay.

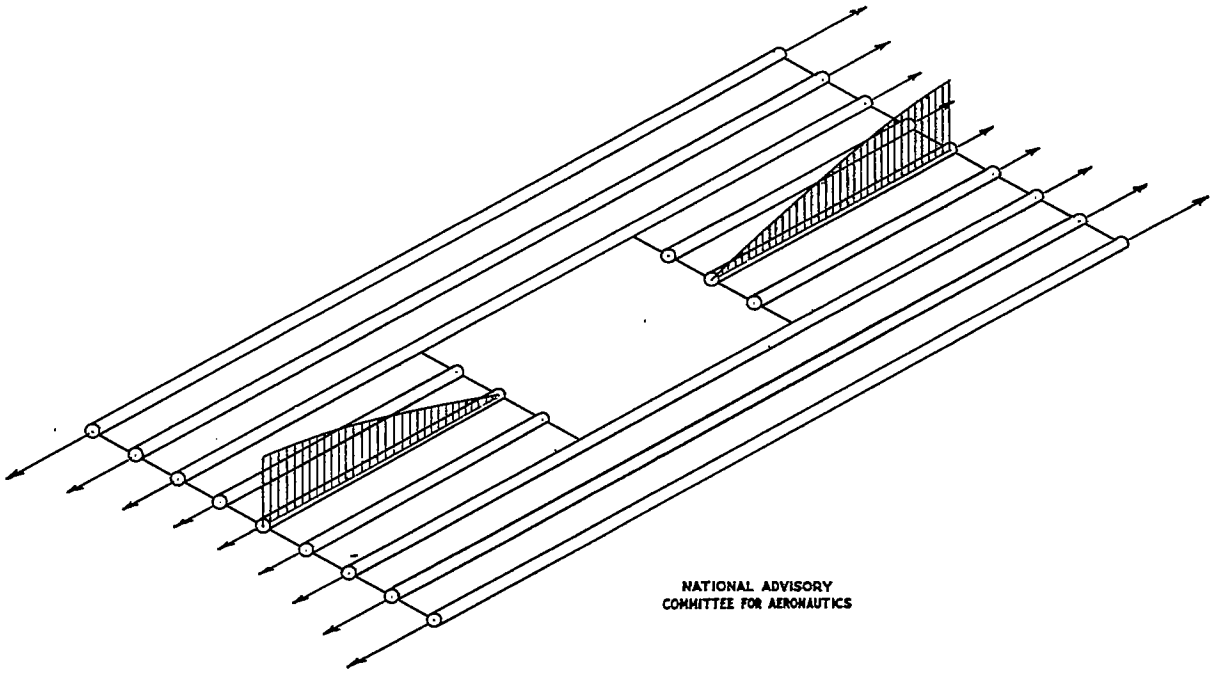

Figure 9.- Stresses in stringers interrupted by cut-out.

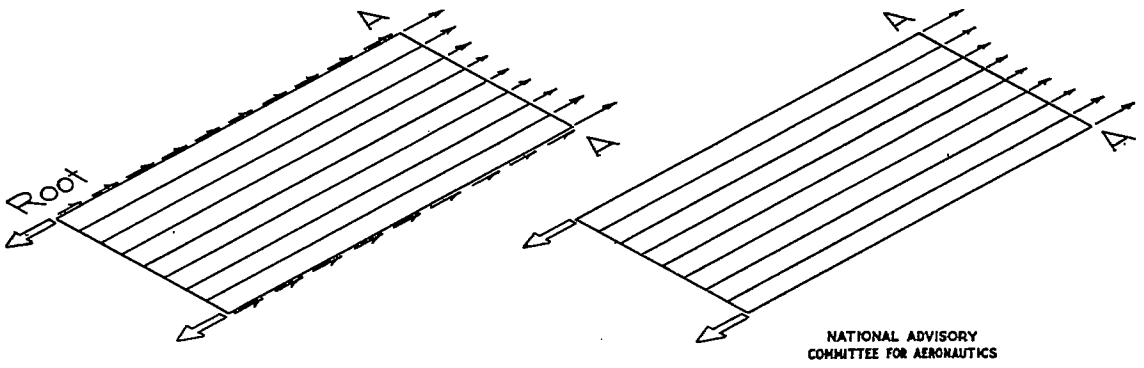

(a) Inboard end of beam cover. (b) Axially loaded panel.

Figure 10.- Introduction of concentrated end loads.

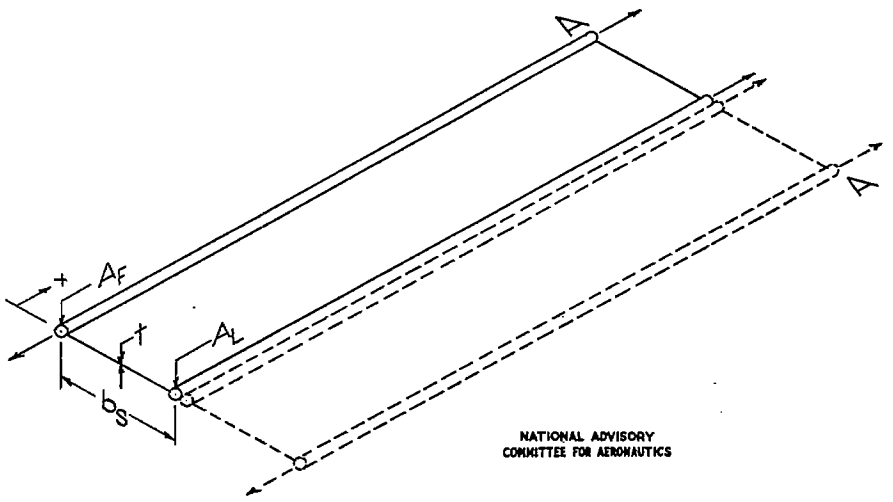

Figure 11.- Substitute single-stringer panel.

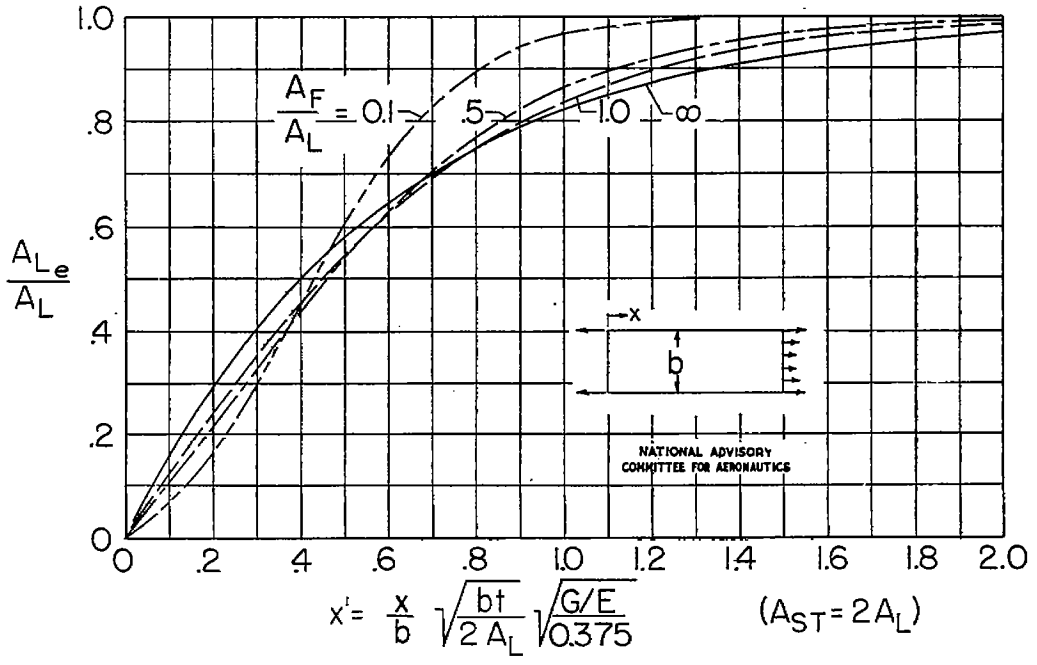

Figure 12.- Stringer effectiveness in axially loaded panel.

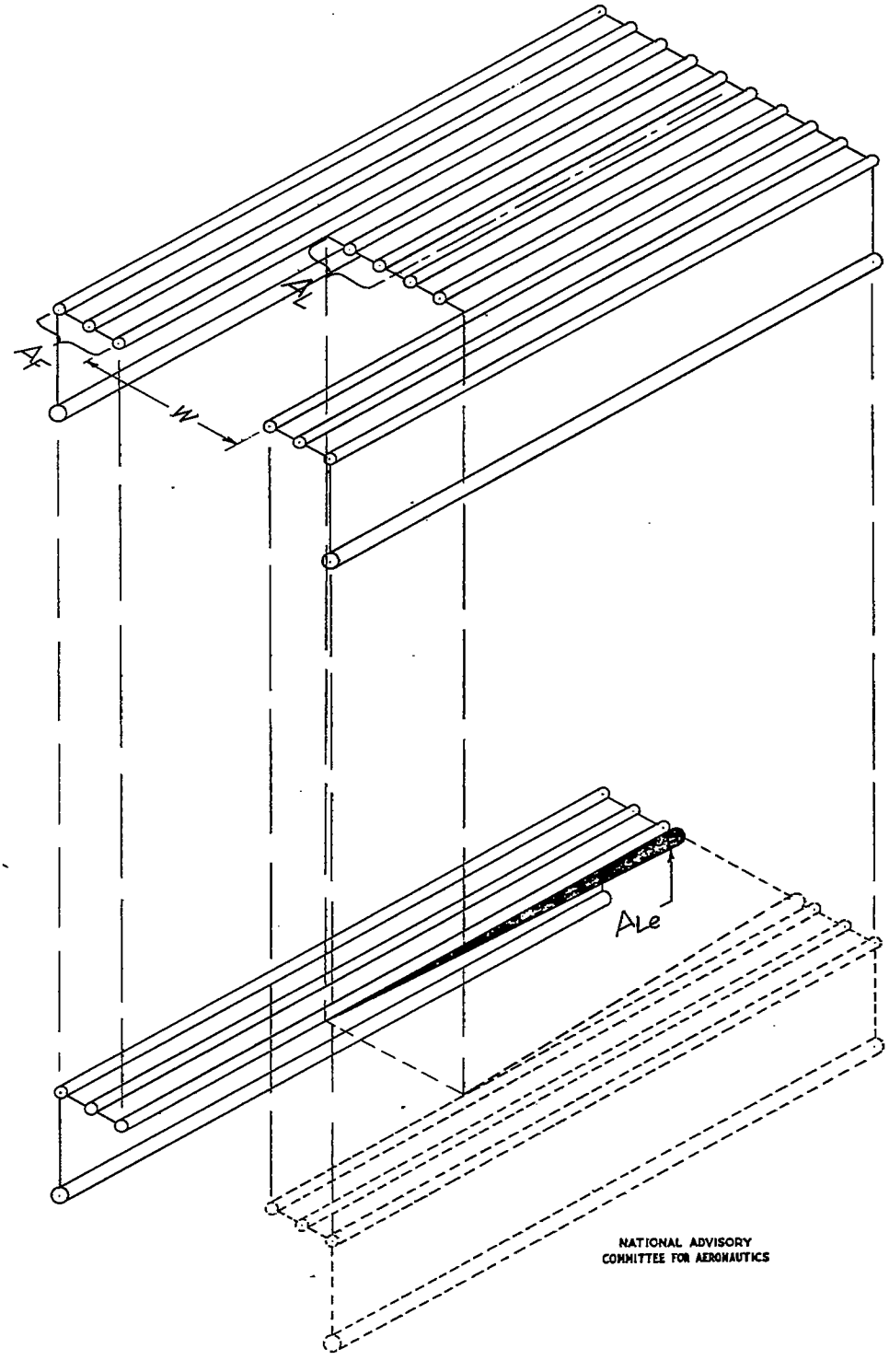

Figure 13.- Cut-out in cover of box beam.

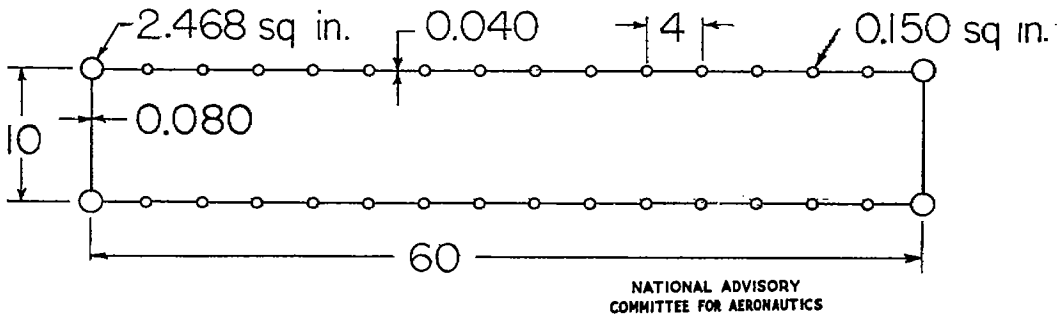

Figure 14.- Cross section of box beam for numerical examples.

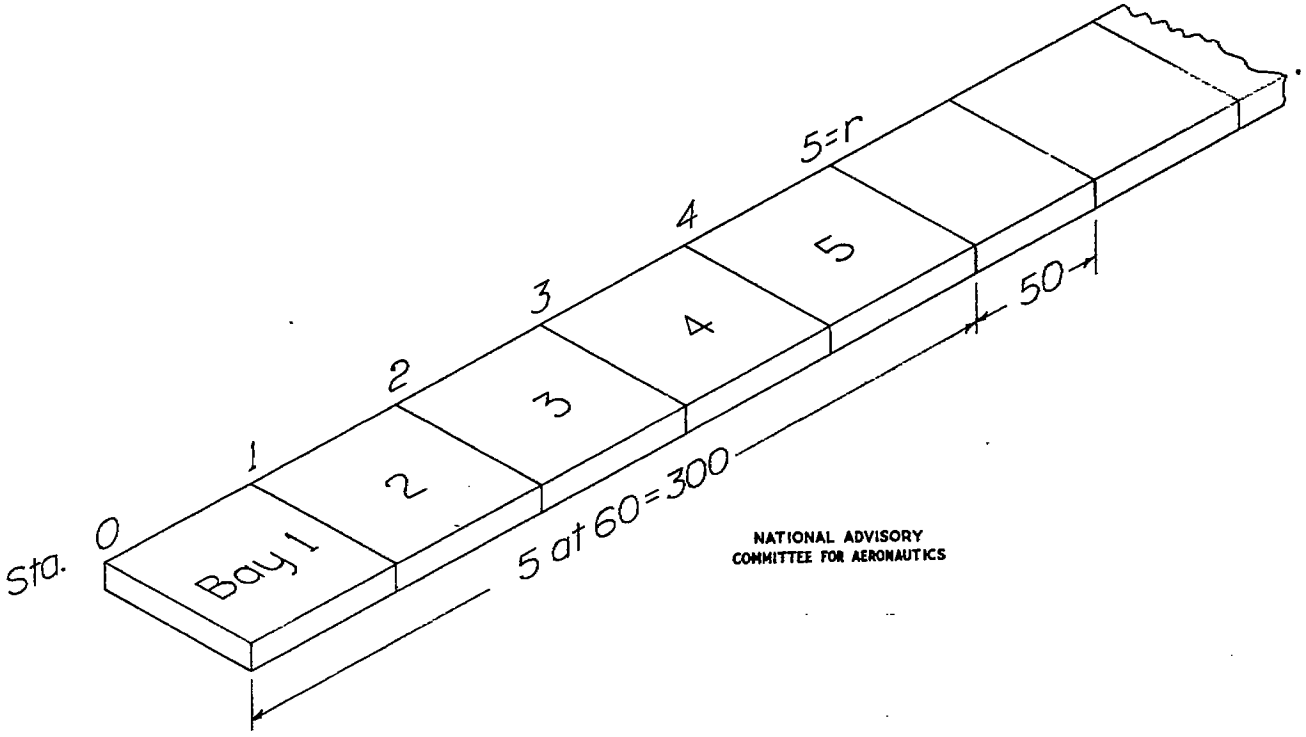

Figure 15.- Box beam for numerical examples.

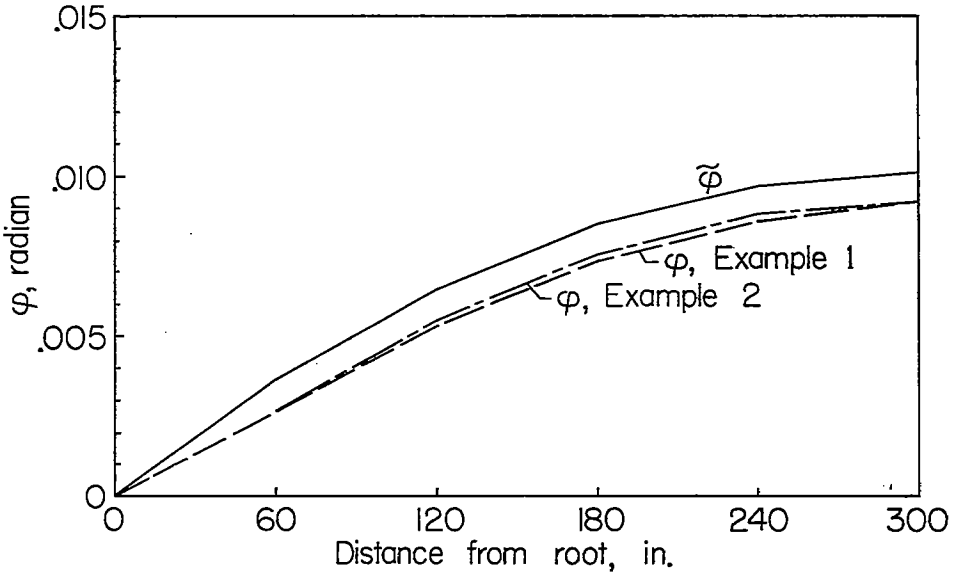

(a) Box without cut-out.

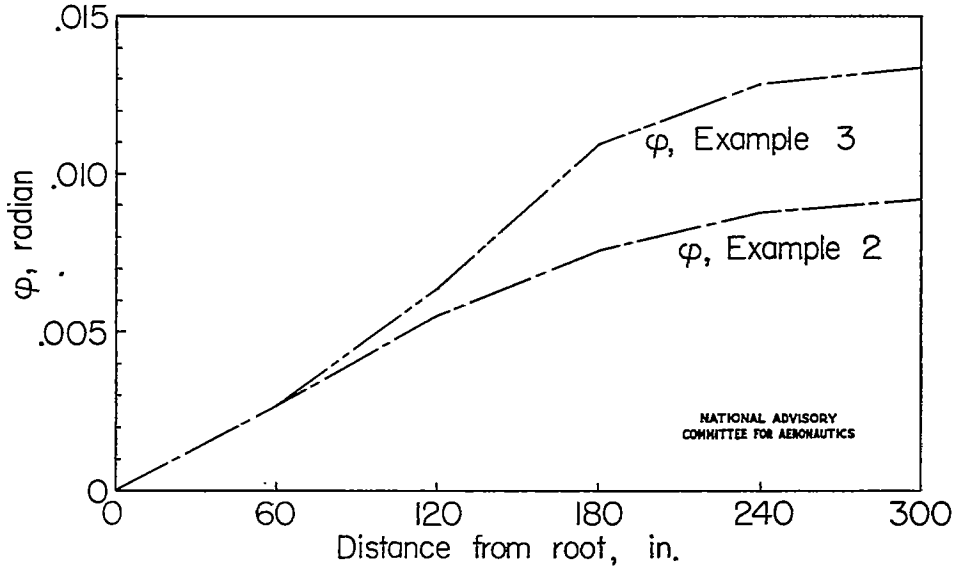

(b) Box with full-width cut-out in bay 3.

Figure 16.- Twist curves for numerical examples.