REPORT No. 899

A GENERAL SMALL-DEFLECTION THEORY FOR FLAT SANDWICH PLATES

By Charles Libove and S. B. Batdorf

SUMMARY

A small-deflection theory is developed for the elastic behavior of orthotropic flat plates in which deflections due to shear are taken into account. In this theory, which covers all types of flat sandwich construction, a plate is characterized by seven physical constants (five stiffnesses and two Poisson ratios) of which six are independent. Both the energy expression and the differential equations are developed. Boundary conditions corresponding to simply supported, clamped, and elastically restrained edges are considered.

INTRODUCTION

The advent of high-speed flight and the concurrent necessity of maintaining aerodynamically smooth surfaces under high stress have led to the increased study of sandwich-plate construction as a possible substitute for sheet-stringer construction in airplane design. A sandwich plate consists essentially of a relatively thick, low-density, low-stiffness core bonded between two thin sheets of high-stiffness material. Materials that have been considered for the core include balsa wood, hard foam rubber, cellulose acetate, resin-impregnated cloth fashioned into a honeycomb, corrugated metal sheet, and even closely spaced stiffeners of the conventional type. The face sheets may be of metal, plywood, wood-pulp plastic, or some other type of high-stiffness material.

Because of the low-stiffness core, the sandwich plate will, in general, experience appreciable deflection due to shear. Furthermore, because the face sheets or core (or both) may have orthotropic stretching properties, the sandwich plate will in general be orthotropic in its flexural properties. As a result, ordinary plate theory, which is based on the assumptions that the plate is isotropic and that deflections due to shear may be neglected, cannot be used to determine the stresses, deflections, or buckling loads of sandwich plates.

A general small-deflection theory for flat orthotropic plates is therefore developed in which deflections due to shear are taken into account. The theory is applicable to any type of orthotropic or isotropic sandwich that behaves essentially as a plate, provided certain physical constants are known. These physical constants (two flexural stiffnesses, two shear stiffnesses, a twisting stiffness, and two Poisson ratios defined in terms of curvatures) serve to describe the plate deformations associated with simple loading conditions and may be regarded as fundamental properties of the plate. For simpler types of sandwich construction the physical constants can be evaluated theoretically from the geometry and physical properties of the materials used. For more complicated types of construction, these constants can be evaluated by means of simple tests on samples of the assembled sandwich, as described in appendix A. A reciprocal relationship between the flexural stiffnesses and Poisson ratios is derived in appendix B.

As is the case with ordinary plate theory, the orthotropic plate theory consists of two parts, each complete in itself. These parts are a set of six differential equations, three of which express the equilibrium of an infinitesimal plate element and three of which relate the curvatures and twist of the element to the forces and moments acting upon it, and an expression for the total potential energy of the system comprising the plate and the forces acting upon it. The six differential equations involve six variables. However, it is shown how these simultaneous equations can be reduced to a single equation of sixth order involving any one of the variables alone. In appendix C the consistency between the differential equations and the potential-energy expression is shown by a variational method.

The consideration of deflections due to shear makes necessary the specification of one more boundary condition than in ordinary plate theory. This fact was first appreciated by Reissner in reference 1. Because of some arbitrariness in the choice of the additional boundary condition, two types of simple support and two types of clamped edges are possible. Furthermore, three boundary conditions can be specified for a free edge, in contrast to ordinary plate theory. Boundary conditions more general than freedom, simple support, or clamping are considered in appendix C.

A number of investigations related to the problem of orthotropic- or isotropic-sandwich-plate analysis have been made previously. Theories for the bending of orthotropic plates due to lateral loads and buckling due to edge loads, neglecting deflections due to shear, are given in references 2, 3, and 4 and pages 380–384 of reference 5. The effect of shear on the bending due to lateral load of homogeneous isotropic plates and isotropic sandwich plates is considered in reference 6. The effect of shear on the bending due to uniform lateral load and buckling due to edge compression of simply supported isotropic sandwich plates with homogeneous cores is considered in investigations by Hopkins and Pearson and by Leggett and Hopkins. A rough method of taking into account deflections due to shear in the buckling of simply supported orthotropic sandwich plates is used in reference 7.

The present theory may be regarded as a natural extension to plates of the approximate theory used in pages 170–174 of reference 8 to take into account deflections due to shear in a beam. The theory of this paper is more general than the aforementioned theories in that it applies to orthotropic or isotropic sandwich plates with homogeneous or nonhomogeneous cores and with arbitrary boundary conditions, it presents both the differential equations and the

energy expression for the plate, and it is applicable to problems that involve lateral as well as edge loads. The differential equations of the present theory are reduced to special forms in order that they may be compared with the equations obtained in references 5 and 6.

The detailed development of the theory comprises most of the following sections and the appendixes. The main parts of the theory are summarized briefly in a section entitled "Recapitulation of Principal Results."

SYMBOLS

x, y, z orthogonal coordinates; z measured normal to plane of plate and x and y parallel to principal axes of flexural symmetry, inches

w deflection of middle surface of plate, measured in z-direction, inches

q intensity of lateral loading, pounds per square inch

Q_x intensity of internal shear acting in z-direction in a cross section originally parallel to yz-plane, pounds per inch

Q_y intensity of internal shear acting in z-direction in a cross section originally parallel to xz-plane, pounds per inch

M_x intensity of internal bending moment acting upon a cross section originally parallel to yz-plane, inch-pounds per inch

M_y intensity of internal bending moment acting upon a cross section originally parallel to xz-plane, inch-pounds per inch

M_{xy} intensity of internal twisting moment acting in a cross section originally parallel to yz-plane or xz-plane, inch-pounds per inch

N_x intensity of middle-plane tensile force parallel to xz-plane, pounds per inch

N_y intensity of middle-plane tensile force parallel to yz-plane, pounds per inch

N_{xy} intensity of middle-plane shearing force parallel to yz-plane and xz-plane, pounds per inch

D_x, D_y flexural stiffnesses of plate with anticlastic bending unrestrained, inch-pounds $\left(\frac{\text{Bending moment per inch}}{\text{Curvature}}\right)$

D_{xy} twisting stiffness of plate, inch-pounds $\left(\frac{\text{Twisting moment per inch}}{\text{Twist}}\right)$

D flexural stiffness of ordinary plate, inch-pounds

D_{Q_x}, D_{Q_y} shear stiffnesses of plate, pounds per inch

μ_x, μ_y Poisson ratios for plate, defined in terms of curvatures

μ Poisson ratio for ordinary plate

γ_x, γ_y shear-strain angles due to shears Q_x and Q_y, respectively, radians

h thickness of plate, inches

a, b length and width, respectively, of rectangular plate, inches

V total potential energy of system, inch-pounds

V_1 strain energy of bending of plate, inch-pounds

V_2 potential energy of external loads, inch-pounds

u, v displacements in x-direction and y-direction, respectively, of a point in middle surface of plate, inches

$[D], [M], [N], [P]$ differential operators

SIGN CONVENTION

The sign convention and notation used in the present paper are, wherever convenient, the same as those used by Timoshenko in reference 5.

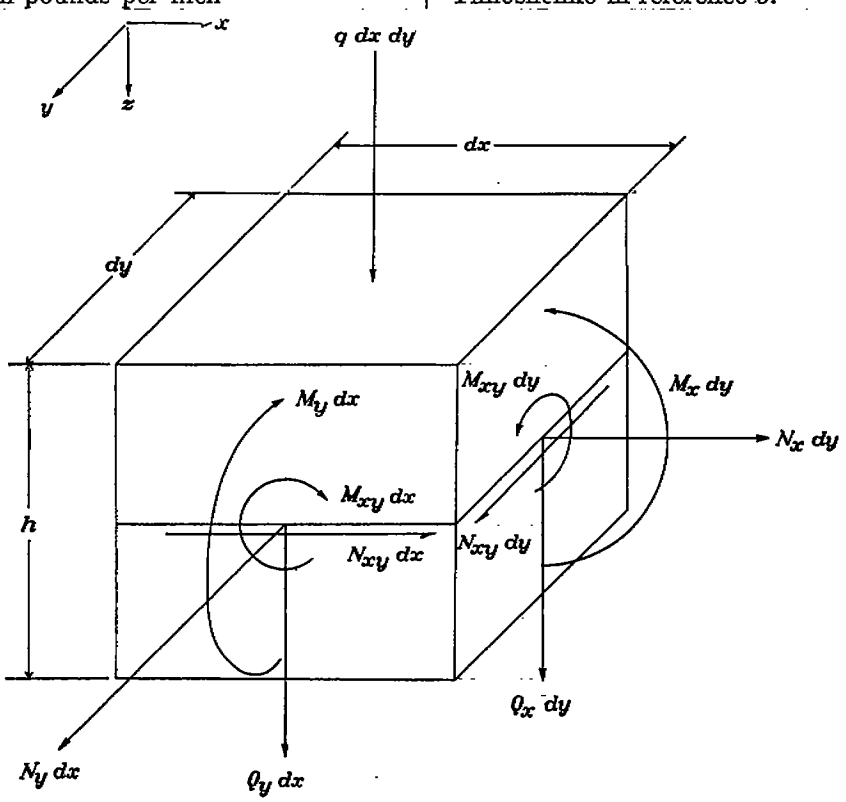

FIGURE 1.—Forces and moments acting on differential element $dx\,dy$.

The x-, y-, and z-axes of an orthogonal coordinate system are oriented so that the xy-plane coincides with the undistorted middle plane of the plate. Deflections w are measured normal to the xy-plane and are positive in the positive direction of the z-axis. The lateral load q is also positive in the direction of the z-axis.

The internal shears Q_x and Q_y, moments M_x, M_y, and M_{xy}, and middle-plane forces N_x, N_y, and N_{xy} are shown in figure 1 acting in their positive directions upon an infinitesimal element of length dx and width dy cut from the unloaded plate by planes parallel to the xz- and yz-planes. Only the forces and moments acting on two adjacent faces of the element are shown. The forces and moments on the opposite faces differ from those on the faces shown only by infinitesimal amounts. The directions in which they act, however, are opposite (for example, moment $M_x\,dy$ on the face shown is counterclockwise; moment $M_x\,dy$ on the opposite face would be shown acting clockwise). The twisting moment and middle-plane shearing force acting on any cross section are known, from equilibrium considerations, to be equal to the twisting moment and middle-plane shearing force acting on a cross section at right angles. The symbols M_{xy} and N_{xy} therefore appear in both of the faces shown in figure 1.

For convenience, in this report the z-direction is sometimes referred to as the vertical direction and planes parallel to the xy-plane are sometimes referred to as horizontal planes.

PHYSICAL CONSTANTS

The physical properties of the plate are described by means of seven constants: the flexural stiffnesses D_x and D_y, the twisting stiffness D_{xy}, the transverse shear stiffnesses D_{Q_x} and D_{Q_y}, and the Poisson ratios μ_x and μ_y. Definitions of these constants are obtained by considering the distortions of the differential element of figure 1 under simple loading conditions.

Let all forces and moments acting on the element be zero, except for the moments M_x acting on two opposite faces. The effect of M_x is to produce a primary curvature $\frac{\partial^2 w}{\partial x^2}$ in the middle surface of the element and also a secondary curvature $\frac{\partial^2 w}{\partial y^2}$ which is a Poisson effect. Then D_x is defined as the negative of the ratio of moment to primary curvature or

$$D_x=-\frac{M_x}{\frac{\partial^2 w}{\partial x^2}} \tag{1}$$

when only M_x is acting, and μ_x is defined as the negative of the ratio of Poisson curvature to primary curvature or

$$\mu_x=-\frac{\frac{\partial^2 w}{\partial y^2}}{\frac{\partial^2 w}{\partial x^2}} \tag{2}$$

when only M_x is acting. No other distortions are assumed but $\frac{\partial^2 w}{\partial x^2}$ and $\frac{\partial^2 w}{\partial y^2}$ when M_x acts. The minus signs are introduced in order to make D_x and μ_x essentially positive quantities.

Similarly, D_y and μ_y are defined as

$$D_y=-\frac{M_y}{\frac{\partial^2 w}{\partial y^2}} \tag{3}$$

$$\mu_y=-\frac{\frac{\partial^2 w}{\partial x^2}}{\frac{\partial^2 w}{\partial y^2}} \tag{4}$$

when only M_y is acting.

If, now, all of the forces and moments are equal to zero except M_{xy} acting on all four faces, the only distortion produced is a twist $\frac{\partial^2 w}{\partial x \partial y}$, and D_{xy} is defined as the ratio of twisting moment to twist or

$$D_{xy}=\frac{M_{xy}}{\frac{\partial^2 w}{\partial x \partial y}} \tag{5}$$

when only M_{xy} is acting.

The transverse shear stiffness D_{Q_x} is defined by letting only the shears Q_x act on opposite faces of the element (except for an infinitesimal moment of magnitude $Q_x\,dy\,dx$ required for equilibrium). The distortion is assumed for the moment to be essentially a sliding of one face of the element with respect to the opposite face, both faces remaining plane. As a result of this sliding, the two faces parallel to the xz-plane are distorted from their rectangular shape into parallelograms by an amount γ_x, which is the shear angle measured in the xz-plane. The shear stiffness D_{Q_x} is defined as the ratio of shear to shear angle or

$$D_{Q_x}=\frac{Q_x}{\gamma_x} \tag{6}$$

when only Q_x is acting. If the sides of the element are kept parallel to the z-axis, the slope of the middle surface is

$$\frac{\partial w}{\partial x}=\gamma_x=\frac{Q_x}{D_{Q_x}}$$

when only Q_x is acting.

In a similar manner, the shear stiffness D_{Q_y} is defined as the ratio of the shear on the faces parallel to the xz-plane to the shear angle measured in the yz-plane when only Q_y is acting or

$$D_{Q_y}=\frac{Q_y}{\gamma_y} \tag{7}$$

when only Q_y is acting. If all sides of the element are kept parallel to the z-axis, the slope produced is

$$\frac{\partial w}{\partial y}=\gamma_y=\frac{Q_y}{D_{Q_y}}$$

when only Q_y is acting.

The constants just discussed serve to define the orthotropic sandwich plate; they can be evaluated theoretically if the properties of the component parts of the sandwich are known and if the plate is of simple construction. In any event, the

constants can be determined experimentally by means of bending tests and twisting tests on beams and panels of the same sandwich construction as the plate. A description of the tests required is given in appendix A.

Although seven physical constants have been discussed, they need not all be independently determined for if any three of the four constants D_x, D_y, μ_x, and μ_y are known the fourth can be evaluated from the relationship

$$\mu_x D_y = \mu_y D_x \tag{8}$$

This relationship, based on a generalization of Maxwell's reciprocal law, is derived in appendix B.

The shear stiffnesses D_{Q_x} and D_{Q_y} merit some additional discussion. The distortion due to shear was assumed to be a sliding of the cross sections over each other, the cross sections remaining plane and the shear strains remaining constant for the entire thickness of the plate and equal to the shear angle γ_x or γ_y. Actually, if the plate is continuous enough for cross sections to exist at all, under shear the cross sections generally tend to warp out of their plane condition (p. 170 of reference 8); this warping makes the shear angle, as defined for equations (6) and (7), meaningless. The shear strain varies with depth and an average shear strain will have to be used as the effective shear angle γ_x or γ_y for purposes of defining effective shear stiffness D_{Q_x} or D_{Q_y}. If the experimental method is used (see appendix A), this difficulty is not encountered because, instead of a shear angle, curvatures are measured, and the stiffnesses obtained are automatically the effective stiffnesses.

Despite the general tendency of cross sections under shear to warp, the assumption that they remain plane (though not normal to the middle surface) can be shown to be almost correct for those sandwiches in which the stiffness of the core is very small compared with the stiffness of the faces (for example, Metalite, honeycomb). For such sandwiches the shear stiffnesses D_{Q_x} and D_{Q_y} can be readily calculated, because the faces may be assumed to take all the direct bending stress and the vertical shear may therefore be assumed uniformly distributed in the core. The shear angles γ_x and γ_y will then be constant throughout the core.

For those sandwiches in which cross sections under shear may not be assumed to remain plane, the tendency of these cross sections to warp introduces a further complication which can, however, be resolved by means of a justifiable simplifying assumption. This complication is due to the fact that if the cross-sectional warping is partially or completely prevented the effect will be to increase the shear stiffness D_{Q_x} or D_{Q_y}. The shear stiffnesses, thus, depend not only on the properties of the plate materials but also on the degree of restraint against cross-sectional warping. For the purpose of the present theory the shear stiffnesses D_{Q_x} and D_{Q_y} are assumed to be constant throughout the plate and have the values they would have if cross sections were allowed to warp freely. The error caused by this assumption will be mainly local in character, being most pronounced in the region of a concentrated lateral load, where a sudden change in the shear tends to produce a sudden change in the degree of warping which is prevented by continuity of the plate. The error will probably be negligible in the case of distributed loads, for which there are only gradual changes in the shear. A discussion of this error in connection with beams is contained in pages 173–174 of reference 8 and in reference 9.

DIFFERENTIAL EQUATIONS FOR PLATE

DISTORTION EQUATIONS

Equations can be derived relating the curvatures $\frac{\partial^2 w}{\partial x^2}$ and $\frac{\partial^2 w}{\partial y^2}$ and the twist $\frac{\partial^2 w}{\partial x \partial y}$ at any point in the plate to the internal shears and moments acting at that point.

Equation for the curvature $\frac{\partial^2 w}{\partial x^2}$.—An expression can be obtained for the total curvature $\frac{\partial^2 w}{\partial x^2}$ in the x-direction by adding together the contributions made by each of the shears and moments acting separately. From equation (1) the curvature contributed by M_x is found to be

$$-\frac{M_x}{D_x}$$

Equations (3) and (4) can be solved for the contribution to $\frac{\partial^2 w}{\partial x^2}$ by M_y which is

$$\mu_y \frac{M_y}{D_y}$$

Finally, the equation following equation (6) indicates that the existance of $\frac{\partial Q_x}{\partial x}$ produces a curvature in the middle plane equal to

$$\frac{1}{D_{Q_x}} \frac{\partial Q_x}{\partial x}$$

The moment M_{xy} and the shear Q_y make no contribution to $\frac{\partial^2 w}{\partial x^2}$. Addition of the three component curvatures gives

$$\frac{\partial^2 w}{\partial x^2} = -\frac{M_x}{D_x} + \mu_y \frac{M_y}{D_y} + \frac{1}{D_{Q_x}} \frac{\partial Q_x}{\partial x} \tag{9a}$$

Equation for the curvature $\frac{\partial^2 w}{\partial y^2}$.—Similar considerations give the curvature in the y-direction as

$$\frac{\partial^2 w}{\partial y^2} = -\frac{M_y}{D_y} + \mu_x \frac{M_x}{D_x} + \frac{1}{D_{Q_y}} \frac{\partial Q_y}{\partial y} \tag{9b}$$

Equation for the twist $\frac{\partial^2 w}{\partial x \partial y}$.—An expression for the twist $\frac{\partial^2 w}{\partial x \partial y}$ is obtained by first writing an expression for the twisting moment M_{xy} in terms of the distortions of the element $dx\,dy$.

Let the middle surface of the element be distorted so that it acquires a twist $\frac{\partial^2 w}{\partial x \partial y}$. Further assume that each line element normal to this middle surface before its distortion (a) first rotates so as to remain normal to it after its distortion,

(b) then rotates through an angle γ_x in a plane parallel to the xz-plane, and (c) then rotates through an angle γ_y in a plane parallel to the yz-plane. (Rotations (b) and (c) produce parallelogram-type distortions of cross sections and are therefore denoted as shear angles γ_x and γ_y.)

Distortion of the element as a result of rotations of type (a) is shown in figure 2 (a). Distortion of the element due to rotations of type (b) is shown in figure 2 (b) on the assumption that γ_x is zero at the center of the element and is changing uniformly in the y-direction. Distortion of the element due to rotation of type (c) is shown in figure 2 (c) on the assumption that γ_y is zero at the center of the element and changing uniformly in the x-direction. The magnitudes of the displacements shown in figure 2 are obtained by considerations of geometry, the details of which are not given.

The twisting moment M_{xy} acting on all four cross sections of the differential element is proportional to the shear strain of the upper and lower surfaces, because this type of strain, throughout the thickness of the element, produces the horizontal shearing couples that make up M_{xy}. By superposition of the three distortions shown in figure 2, the shear strain in the upper (or lower) surface can be written as

$$\left(\frac{h}{2}\frac{\partial^2 w}{\partial x\partial y}+\frac{h}{2}\frac{\partial^2 w}{\partial x\partial y}\right)-\frac{h}{2}\frac{\partial\gamma_x}{\partial y}-\frac{h}{2}\frac{\partial\gamma_y}{\partial x}$$

or

$$h\left(\frac{\partial^2 w}{\partial x\partial y}-\frac{1}{2}\frac{\partial\gamma_x}{\partial y}-\frac{1}{2}\frac{\partial\gamma_y}{\partial x}\right)$$

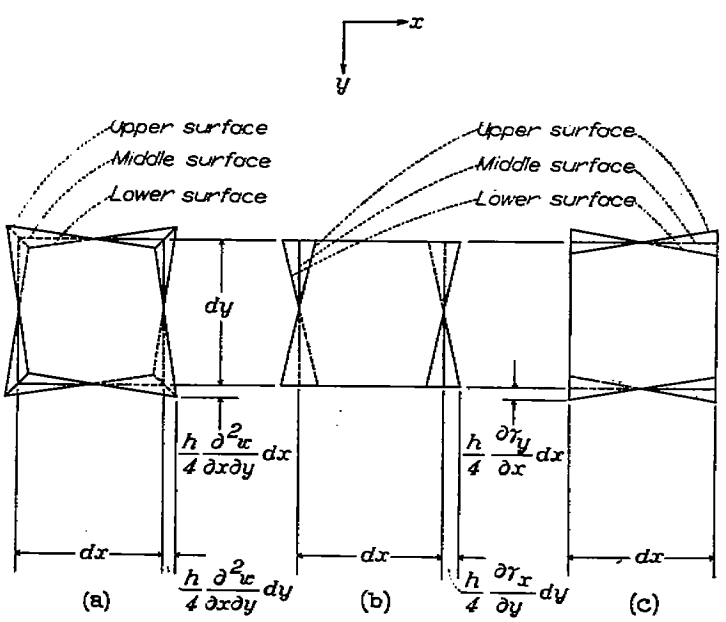

(a) Distortion due to $\frac{\partial^2 w}{\partial x\partial y}$, all line elements remaining normal to middle surface. (b) Distortion due to $\frac{\partial\gamma_x}{\partial y}$. (c) Distortion due to $\frac{\partial\gamma_y}{\partial x}$.

FIGURE 2.—Distortions of element $dx\,dy$ in twisting.

and therefore,

$$M_{xy}\propto h\left(\frac{\partial^2 w}{\partial x\partial y}-\frac{1}{2}\frac{\partial\gamma_x}{\partial y}-\frac{1}{2}\frac{\partial\gamma_y}{\partial x}\right)$$

Substitution for γ_x and γ_y in terms of Q_x and Q_y (equations (6) and (7)) gives

$$M_{xy}=h'\left(\frac{\partial^2 w}{\partial x\partial y}-\frac{1}{2}\frac{1}{D_{Q_x}}\frac{\partial Q_x}{\partial y}-\frac{1}{2}\frac{1}{D_{Q_y}}\frac{\partial Q_y}{\partial x}\right)$$

where h' is a proportionality constant absorbing h. When Q_x and Q_y are both set equal to zero, the above equation must reduce to equation (5), because only M_{xy} is acting on the differential element. The constant h' is therefore identified as D_{xy} and the equation for twisting moment becomes

$$M_{xy}=D_{xy}\left(\frac{\partial^2 w}{\partial x\partial y}-\frac{1}{2}\frac{1}{D_{Q_x}}\frac{\partial Q_x}{\partial y}-\frac{1}{2}\frac{1}{D_{Q_y}}\frac{\partial Q_y}{\partial x}\right)$$

Solution for $\frac{\partial^2 w}{\partial x\partial y}$ yields the following equation analogous to the equations already obtained for $\frac{\partial^2 w}{\partial x^2}$ and $\frac{\partial^2 w}{\partial y^2}$:

$$\frac{\partial^2 w}{\partial x\partial y}=\frac{M_{xy}}{D_{xy}}+\frac{1}{2}\frac{1}{D_{Q_x}}\frac{\partial Q_x}{\partial y}+\frac{1}{2}\frac{1}{D_{Q_y}}\frac{\partial Q_y}{\partial x} \tag{9c}$$

EQUILIBRIUM EQUATIONS

The element $dx\,dy$ must be in equilibrium under all the forces and moments acting upon it. This condition implies that certain relationships must exist among these forces and moments. These relationships can be derived by considering the changes that occur in the forces and moments from one face to the opposite and writing the equations of equilibrium for the element. The equations are the same as in ordinary plate theory. For equilibrium of forces in the x- and y-directions, these equations are obtained from equations (196) of reference 5:

$$\frac{\partial N_x}{\partial x}+\frac{\partial N_{xy}}{\partial y}=0 \tag{10a}$$

$$\frac{\partial N_y}{\partial y}+\frac{\partial N_{xy}}{dx}=0 \tag{10b}$$

The equation for equilibrium of vertical forces is given at the top of page 305 of reference 5 as

$$\frac{\partial^2 M_x}{\partial x^2}-2\frac{\partial^2 M_{xy}}{\partial x\partial y}+\frac{\partial^2 M_y}{\partial y^2}=-\left(q+N_x\frac{\partial^2 w}{\partial x^2}+N_y\frac{\partial^2 w}{\partial y^2}+2N_{xy}\frac{\partial^2 w}{\partial x\partial y}\right) \tag{11a}$$

And the equations for equilibrium of moments about the y- and x-axes are obtained from equations (188) and (189) of reference 5 as

$$Q_x=-\frac{\partial M_{xy}}{\partial y}+\frac{\partial M_x}{\partial x} \tag{11b}$$

$$Q_y=-\frac{\partial M_{xy}}{\partial x}+\frac{\partial M_y}{\partial y} \tag{11c}$$

(Equations (11) are also derived in appendix C by minimization of the potential energy.) Note that the left-hand side of equation (11a) can, by virtue of equations (11b) and (11c), be simplified to

$$\frac{\partial Q_x}{\partial x}+\frac{\partial Q_y}{\partial y}$$

If, as is customary in small-deflection theory, the middle-plane stresses N_x, N_y, and N_{xy} are assumed to be unchanged in the course of the plate's deflection and equal to their initial values before application of lateral load, then equations (10) are automatically satisfied and equations (9) and (11) constitute the six fundamental differential equations that determine the forces, moments, and distortions throughout the orthotropic plate. They can be used in their present form or in the alternate form obtained in the following section.

ALTERNATE FORM OF THE DIFFERENTIAL EQUATIONS

The fundamental differential equations (9) and (11) can be transformed so as to separate variables. Equations (9) are first solved for M_x, M_y, and M_{xy} to obtain

$$M_x=-\frac{D_x}{1-\mu_x\mu_y}\left[\frac{\partial}{\partial x}\left(\frac{\partial w}{\partial x}-\frac{Q_x}{D_{Q_x}}\right)+\mu_y\frac{\partial}{\partial y}\left(\frac{\partial w}{\partial y}-\frac{Q_y}{D_{Q_y}}\right)\right] \tag{12a}$$

$$M_y=-\frac{D_y}{1-\mu_x\mu_y}\left[\frac{\partial}{\partial y}\left(\frac{\partial w}{\partial y}-\frac{Q_y}{D_{Q_y}}\right)+\mu_x\frac{\partial}{\partial x}\left(\frac{\partial w}{\partial x}-\frac{Q_x}{D_{Q_x}}\right)\right] \tag{12b}$$

$$M_{xy}=\frac{1}{2}D_{xy}\left[\frac{\partial}{\partial x}\left(\frac{\partial w}{\partial y}-\frac{Q_y}{D_{Q_y}}\right)+\frac{\partial}{\partial y}\left(\frac{\partial w}{\partial x}-\frac{Q_x}{D_{Q_x}}\right)\right] \tag{12c}$$

With the left-hand side of equation (11a) simplified to $\frac{\partial Q_x}{\partial x}+\frac{\partial Q_y}{\partial y}$ and the above expressions for M_x, M_y, and M_{xy} substituted into equations (11b) and (11c), equations (11) become, after some regrouping of terms,

$$\left(N_x\frac{\partial^2}{\partial x^2}+N_y\frac{\partial^2}{\partial y^2}+2N_{xy}\frac{\partial^2}{\partial x\partial y}\right)w+\left(\frac{\partial}{\partial x}\right)Q_x+\left(\frac{\partial}{\partial y}\right)Q_y=-q$$

$$\left[-D_{xy}\frac{\partial^3}{\partial x\partial y^2}-\frac{D_x}{1-\mu_x\mu_y}\left(\mu_y\frac{\partial^3}{\partial x\partial y^2}+\frac{\partial^3}{\partial x^3}\right)\right]w+\left[\frac{1}{2}\frac{D_{xy}}{D_{Q_x}}\frac{\partial^2}{\partial y^2}+\frac{D_x}{(1-\mu_x\mu_y)D_{Q_x}}\frac{\partial^2}{\partial x^2}-1\right]Q_x+\left[\frac{1}{2}\frac{D_{xy}}{D_{Q_y}}\frac{\partial^2}{\partial x\partial y}+\frac{D_x\mu_y}{(1-\mu_x\mu_y)D_{Q_y}}\frac{\partial^2}{\partial x\partial y}\right]Q_y=0$$

$$\left[-D_{xy}\frac{\partial^3}{\partial x^2\partial y}-\frac{D_y}{1-\mu_x\mu_y}\left(\mu_x\frac{\partial^3}{\partial x^2\partial y}+\frac{\partial^3}{\partial y^3}\right)\right]w+\left[\frac{1}{2}\frac{D_{xy}}{D_{Q_x}}\frac{\partial^2}{\partial x\partial y}+\frac{D_y\mu_x}{(1-\mu_x\mu_y)D_{Q_x}}\frac{\partial^2}{\partial x\partial y}\right]Q_x+\left[\frac{1}{2}\frac{D_{xy}}{D_{Q_y}}\frac{\partial^2}{\partial x^2}+\frac{D_y}{(1-\mu_x\mu_y)D_{Q_y}}\frac{\partial^2}{\partial y^2}-1\right]Q_y=0$$

These three equations can be solved to obtain a differential equation for w alone in terms of q, an equation for Q_x alone in terms of q, and an equation for Q_y alone in terms of q. This separation is accomplished most easily, for the case in which N_x, N_y, and N_{xy} are constant throughout the plate, by treating the three differential equations as though they were algebraic equations and solving for w, Q_x, and Q_y by means of determinants. The terms in the determinants are the differential-operator coefficients of w, Q_x, and Q_y appearing in the three equations. In expanding these determinants, the rule for multiplication of linear operators must be used. For example,

$$\frac{\partial^2}{\partial y^2}\frac{\partial^2}{\partial x\partial y}=\frac{\partial^4}{\partial x\partial y^3}$$

As a result of such a solution, the following differential equations are obtained for w, Q_x, and Q_y:

$$[D]w=-[M]q \tag{13a}$$

$$[D]Q_x=-[N]q \tag{13b}$$

$$[D]Q_y=-[P]q \tag{13c}$$

where $[D]$, $[M]$, $[N]$, and $[P]$ are differential operators defined as

$$[D]=\frac{1}{2}\frac{D_{xy}D_x}{D_{Q_y}}\frac{\partial^6}{\partial x^6}+\left(\frac{1}{2}\frac{D_{xy}D_x}{D_{Q_x}}+\frac{D_xD_y-\frac{1}{2}D_{xy}D_x\mu_y-\frac{1}{2}D_{xy}D_y\mu_x}{D_{Q_y}}\right)\frac{\partial^6}{\partial x^4\partial y^2}+\left(\frac{1}{2}\frac{D_{xy}D_y}{D_{Q_y}}+\frac{D_xD_y-\frac{1}{2}D_{xy}D_x\mu_y-\frac{1}{2}D_{xy}D_y\mu_x}{D_{Q_x}}\right)\frac{\partial^6}{\partial x^2\partial y^4}+$$
$$\frac{1}{2}\frac{D_{xy}D_y}{D_{Q_x}}\frac{\partial^6}{\partial y^6}-D_x\frac{\partial^4}{\partial x^4}-[2D_{xy}(1-\mu_x\mu_y)+D_x\mu_y+D_y\mu_x]\frac{\partial^4}{\partial x^2\partial y^2}-D_y\frac{\partial^4}{\partial y^4}+\frac{1}{2}\frac{D_{xy}D_x}{D_{Q_x}D_{Q_y}}\left(N_x\frac{\partial^6}{\partial x^6}+N_y\frac{\partial^6}{\partial x^4\partial y^2}+2N_{xy}\frac{\partial^6}{\partial x^5\partial y}\right)+$$
$$\left(\frac{D_xD_y-\frac{1}{2}D_{xy}D_x\mu_y-\frac{1}{2}D_{xy}D_y\mu_x}{D_{Q_x}D_{Q_y}}\right)\left(N_x\frac{\partial^6}{\partial x^4\partial y^2}+N_y\frac{\partial^6}{\partial x^2\partial y^4}+2N_{xy}\frac{\partial^6}{\partial x^3\partial y^3}\right)+\frac{1}{2}\frac{D_{xy}D_y}{D_{Q_x}D_{Q_y}}\left(N_x\frac{\partial^6}{\partial x^2\partial y^4}+N_y\frac{\partial^6}{\partial y^6}+2N_{xy}\frac{\partial^6}{\partial x\partial y^5}\right)-$$
$$\left[\frac{1}{2}\frac{D_{xy}(1-\mu_x\mu_y)}{D_{Q_y}}+\frac{D_x}{D_{Q_x}}\right]\left(N_x\frac{\partial^4}{\partial x^4}+N_y\frac{\partial^4}{\partial x^2\partial y^2}+2N_{xy}\frac{\partial^4}{\partial x^3\partial y}\right)-\left[\frac{1}{2}\frac{D_{xy}(1-\mu_x\mu_y)}{D_{Q_x}}+\frac{D_y}{D_{Q_y}}\right]\left(N_x\frac{\partial^4}{\partial x^2\partial y^2}+N_y\frac{\partial^4}{\partial y^4}+2N_{xy}\frac{\partial^4}{\partial x\partial y^3}\right)+$$
$$(1-\mu_x\mu_y)\left(N_x\frac{\partial^2}{\partial x^2}+N_y\frac{\partial^2}{\partial y^2}+2N_{xy}\frac{\partial^2}{\partial x\partial y}\right) \tag{14a}$$

$$[M]=\frac{1}{2}\frac{D_{xy}D_x}{D_{Q_x}D_{Q_y}}\frac{\partial^4}{\partial x^4}+\left(\frac{D_xD_y-\frac{1}{2}D_{xy}D_x\mu_y-\frac{1}{2}D_{xy}D_y\mu_x}{D_{Q_x}D_{Q_y}}\right)\frac{\partial^4}{\partial x^2\partial y^2}+\frac{1}{2}\frac{D_{xy}D_y}{D_{Q_x}D_{Q_y}}\frac{\partial^4}{\partial y^4}-\left[\frac{1}{2}\frac{D_{xy}(1-\mu_x\mu_y)}{D_{Q_x}}+\frac{D_y}{D_{Q_y}}\right]\frac{\partial^2}{\partial y^2}-$$
$$\left[\frac{1}{2}\frac{D_{xy}(1-\mu_x\mu_y)}{D_{Q_y}}+\frac{D_x}{D_{Q_x}}\right]\frac{\partial^2}{\partial x^2}+(1-\mu_x\mu_y) \tag{14b}$$

$$[N]=\frac{1}{2}\frac{D_{xy}D_x}{D_{Q_y}}\frac{\partial^5}{\partial x^5}+\left(\frac{D_xD_y-\frac{1}{2}D_{xy}D_x\mu_y-\frac{1}{2}D_{xy}D_y\mu_x}{D_{Q_y}}\right)\frac{\partial^5}{\partial x^3\partial y^2}+\frac{1}{2}\frac{D_{xy}D_y}{D_{Q_y}}\frac{\partial^5}{\partial x\partial y^4}-D_x\frac{\partial^3}{\partial x^3}-[D_{xy}(1-\mu_x\mu_y)+D_x\mu_y]\frac{\partial^3}{\partial x\partial y^2} \tag{14c}$$

$$[P]=\frac{1}{2}\frac{D_{xy}D_x}{D_{Q_x}}\frac{\partial^5}{\partial x^4\partial y}+\left(\frac{D_xD_y-\frac{1}{2}D_{xy}D_x\mu_y-\frac{1}{2}D_{xy}D_y\mu_x}{D_{Q_x}}\right)\frac{\partial^5}{\partial x^2\partial y^3}+\frac{1}{2}\frac{D_{xy}D_y}{D_{Q_x}}\frac{\partial^5}{\partial y^5}-D_y\frac{\partial^3}{\partial y^3}-[D_{xy}(1-\mu_x\mu_y)+D_y\mu_x]\frac{\partial^3}{\partial x^2\partial y} \tag{14d}$$

Equations (12) and (13) taken together constitute an alternate set of differential equations that the plate must satisfy.

COMPARISONS WITH PREVIOUS SOLUTIONS

Homogeneous isotropic plates, deflections due to shear neglected.—The usual fourth-order equation for homogeneous isotropic plates, in which deflections due to shear are neglected, can be obtained from equation (13a) by letting

$$D_{Q_x}=D_{Q_y}=\infty$$

$$\mu_x=\mu_y=\mu$$

$$D_x=D_y=D(1-\mu^2)$$

$$D_{xy}=D(1-\mu)$$

With these substitutions made, equation (13a) becomes, after some transposition of terms,

$$\frac{\partial^4 w}{\partial x^4}+2\frac{\partial^4 w}{\partial x^2\partial y^2}+\frac{\partial^4 w}{\partial y^4}=\frac{1}{D}\left(q+N_x\frac{\partial^2 w}{\partial x^2}+N_y\frac{\partial^2 w}{\partial y^2}+2N_{xy}\frac{\partial^2 w}{\partial x\partial y}\right)$$

which is the same as equation (197) of reference 5.

Isotropic sandwich plates, deflections due to shear considered.—The differential equations for isotropic sandwich plates are obtained in reference 6 by use of Castigliano's theorem of least work for the case in which the middle-surface forces N_x, N_y, and N_{xy} are zero. The equilibrium differential equations of reference 6 are equivalent to equations (11) of the present paper. Equations (10a), (10d), (10e), and (10f) of reference 6 can be solved simultaneously to obtain the following equations for the curvatures and twist in terms of the vertical shears and moments (the notation is that of reference 6):

$$\frac{\partial^2 w}{\partial x^2}=-\frac{M_x}{D(1-\nu^2)}+\frac{\nu M_y}{D(1-\nu^2)}+\frac{1}{C_s}\frac{\partial V_x}{\partial x}-\frac{1}{C_n}\left(\frac{\partial V_x}{\partial x}+\frac{\partial V_y}{\partial y}\right)$$

$$\frac{\partial^2 w}{\partial y^2}=-\frac{M_y}{D(1-\nu^2)}+\frac{\nu M_x}{D(1-\nu^2)}+\frac{1}{C_s}\frac{\partial V_y}{\partial y}-\frac{1}{C_n}\left(\frac{\partial V_x}{\partial x}+\frac{\partial V_y}{\partial y}\right)$$

$$\frac{\partial^2 w}{\partial x\partial y}=-\frac{H}{D(1-\nu)}+\frac{1}{2C_s}\left(\frac{\partial V_x}{\partial y}+\frac{\partial V_y}{\partial x}\right)$$

The symbols H, V_x, and V_y in the above equations correspond to $-M_{xy}$, Q_x, and Q_y, respectively, in the notation of the present paper. The quantities D, C_s, C_n, and ν are physical constants for the plate. The above equations are seen to be identical in form to equations (9) of the present paper (if D_{Q_x} is set equal to D_{Q_y} for isotropy in the x- and y-directions) except for the additional term $\frac{1}{C_n}\left(\frac{\partial V_x}{\partial x}+\frac{\partial V_y}{\partial y}\right)$ in each curvature equation. This term arises from the consideration of stresses and strains in the vertical direction, which were neglected in the present paper on the ground that they have a negligible effect on the over-all flexural behavior of the plate and are only important in the neighborhood of concentrated loads. Setting C_n equal to infinity makes the equations derived from reference 6 completely identical in form to equations (9) of the present paper. It should be mentioned that the quantity w as used in reference 6 is not the deflection of the middle surface but "a weighted average across the thickness of the deflections of all points of the plate which lie on a normal to the middle surface."

BOUNDARY CONDITIONS

The boundary conditions are first discussed for those types of edge support most commonly assumed in practice: namely, complete freedom, simple support, and clamping. (More general kinds of support are considered in appendix C.) These supports are characterized by the condition that no work is done by the moments and vertical forces at the boundary. A boundary parallel to the y-axis is considered; the conditions for a boundary parallel to the x-axis can be obtained by replacing x by y and vice versa, except in the subscripts of M_{xy} and N_{xy}.

Free edge.—The boundary conditions for a free unloaded edge parallel to the y-axis express the conditions of zero bending moments, zero twisting moment, and zero vertical force, or

$$M_x=0 \tag{15a}$$

$$M_{xy}=0 \tag{15b}$$

$$Q_x=0 \tag{15c}$$

If the free edge carries load, the middle-plane forces N_x and N_{xy} will not in general be zero and the boundary condition of zero net vertical force becomes

$$Q_x+N_x\frac{\partial w}{\partial x}+N_{xy}\frac{\partial w}{\partial y}=0 \tag{15c'}$$

instead of equation (15c).

Simply supported edge.—The principal boundary conditions for a simply supported edge parallel to the y-axis are $w=0$ and $M_x=0$. If to these two conditions is added the restriction that there is no y-displacement of points in the boundary, then the shear angle γ_y is zero and therefore $\frac{Q_y}{D_{Q_y}}=0$. If, on the other hand, the support at the boundary is applied only to the middle surface at the boundary and no horizontal forces are applied to prevent the y-displacement of other points in the boundary, then M_{xy}, which is made up of such horizontal forces, must be zero. Two different types of simple support thus emerge. For simple support in which all points in the boundary are prevented from moving parallel to the edge, the conditions are

$$w=0 \tag{16a}$$

$$M_x=0 \tag{16b}$$

$$\frac{Q_y}{D_{Q_y}}=0 \tag{16c}$$

For simple support in which all points in the boundary, except those in the middle surface, are free to move parallel to the edge, the conditions are

$$w=0 \tag{17a}$$

$$M_x=0 \tag{17b}$$

$$M_{xy}=0 \tag{17c}$$

Of the two types of simple support, the first (equations 16)) is more likely to occur in practice.

Clamped edge.—The principal conditions characterizing a clamped edge parallel to the y-axis are zero deflection of the middle surface and zero rotation of the cross sections making up the boundary (that is, the boundary plane remains parallel to the z-axis). The requirement of zero deflection is satisfied by letting $w=0$ at the boundary. The requirement that boundary cross sections remain parallel to the z-axis is satisfied by letting $\frac{\partial w}{\partial x}=\frac{Q_x}{D_{Q_x}}$, as the equation following equation (6) indicates. (Note that if deflections due to shear are neglected by letting $D_{Q_x}=\infty$, then the last boundary condition reduces to $\frac{\partial w}{\partial x}=0$, which is familiar in ordinary plate theory.) Just as in the case of simple support, the third boundary condition is either $\frac{Q_y}{D_{Q_y}}=0$ or $M_{xy}=0$ depending on whether or not points in the boundary (other than those points in the middle surface) are prevented from moving parallel to the edge. Thus, two types of clamping are possible. For a clamped edge in which the points in the boundary of the plate are prevented from moving parallel to the edge, the conditions are

$$w=0 \tag{18a}$$

$$\frac{\partial w}{\partial x}-\frac{Q_x}{D_{Q_x}}=0 \tag{18b}$$

$$\frac{Q_y}{D_{Q_y}}=0 \tag{18c}$$

For a clamped edge in which the points in the boundary

(except those in the middle surface) are free to move parallel to the edge, the conditions are

$$w=0 \tag{19a}$$

$$\frac{\partial w}{\partial x}-\frac{Q_x}{D_{Q_x}}=0 \tag{19b}$$

$$M_{xy}=0 \tag{19c}$$

The latter type of clamping is very unlikely to occur in practice, because any practical type of restraint that keeps the boundary from rotating has to be applied over an appreciable part of the thickness of the edge and therefore prevents most points in the boundary from moving freely parallel to the edge.

The boundary conditions just discussed, as well as boundary conditions corresponding to more general types of support, are derived in appendix C by a variational method.

POTENTIAL-ENERGY EXPRESSION

STRAIN ENERGY

An expression can be obtained for the strain energy V_1 produced by the moments M_x, M_y, and M_{xy} and the shears Q_x and Q_y by considering the work done by these moments and shears in distorting the differential element of figure 1.

The work of the moments $M_x\,dy$ is equal to $\frac{1}{2}M_x\,dy$ times the counterclockwise rotation of the right-hand face with respect to the left-hand face of the element. This rotation is made up of two parts: the rotation caused by the moment M_x itself and the Poisson rotation caused by the moment M_y. The sum of these two parts is $-\left(-\frac{M_x}{D_x}+\mu_y\frac{M_y}{D_y}\right)dx$. (Note that although the term $\frac{\partial Q_x}{\partial x}$ makes a contribution to the curvature of the middle surface, this term represents a rate of change of sliding rather than a rate of change of rotation and therefore makes no contribution to the rotation of one face with respect to the opposite.) The work of the moments M_x is therefore

$$-\frac{1}{2}M_x dy\left(-\frac{M_x}{D_x}+\mu_y\frac{M_y}{D_y}\right)dx$$

or

$$\frac{1}{2}\left(\frac{M_x^2}{D_x}-\mu_y\frac{M_xM_y}{D_y}\right)dx\,dy \tag{20}$$

Similarly, the work of the moments M_y is

$$\frac{1}{2}\left(\frac{M_y^2}{D_y}-\mu_x\frac{M_xM_y}{D_x}\right)dx\,dy \tag{21}$$

The work of those moments M_{xy} acting in the faces parallel to the xz-plane is equal to $\frac{1}{2}M_{xy}\,dx$ times the clockwise rotation of the nearer face (as seen in fig. 1) with respect to the farther face. This rotation is made up ot the two parts shown in figures 2(a) and 2(b) and is equal to

$$\frac{\partial^2 w}{\partial x\partial y}dy-\frac{\partial\gamma_x}{\partial y}dy$$

or, replacing γ_x by its equivalent in terms of Q_x (equation (6)),

$$\left(\frac{\partial^2 w}{\partial x\partial y}-\frac{1}{D_{Q_x}}\frac{\partial Q_x}{\partial y}\right)dy$$

The work of the moments M_{xy} parallel to the xz-plane is therefore

$$\frac{1}{2}M_{xy}\left(\frac{\partial^2 w}{\partial x\partial y}-\frac{1}{D_{Q_x}}\frac{\partial Q_x}{\partial y}\right)dx\,dy$$

Similarly, the work of those moments M_{xy} parallel to the yz-plane is

$$\frac{1}{2}M_{xy}\left(\frac{\partial^2 w}{\partial x\partial y}-\frac{1}{D_{Q_y}}\frac{\partial Q_y}{\partial x}\right)dx\,dy$$

The total work of the moments M_{xy} is, by adding the last two expressions,

$$M_{xy}\left(\frac{\partial^2 w}{\partial x\partial y}-\frac{1}{2}\frac{1}{D_{Q_x}}\frac{\partial Q_x}{\partial y}-\frac{1}{2}\frac{1}{D_{Q_y}}\frac{\partial Q_y}{\partial x}\right)dx\,dy$$

The factor in parentheses is simply $\frac{M_{xy}}{D_{xy}}$, from the equation preceding equation (9c), and the work of the moments M_{xy} therefore becomes

$$\frac{M_{xy}^2}{D_{xy}}dx\,dy \tag{22}$$

The work of the shears Q_x is $\frac{1}{2}Q_x\,dy$ times the downward distance through which the right-hand face slides with respect to the left-hand face. This distance is $\gamma_x\,dx$ and work is therefore $\frac{1}{2}Q_x\gamma_x\,dx\,dy$. Replacement of γ_x by its equivalent in terms of Q_x gives

$$\frac{1}{2}\frac{Q_x^2}{D_{Q_x}}dx\,dy \tag{23}$$

for the work of the shears Q_x. Similarly, the work of the shears Q_y is

$$\frac{1}{2}\frac{Q_y^2}{D_{Q_y}}dx\,dy \tag{24}$$

Integration of the energy expressions (20) to (24) over the entire plate gives, as the total strain energy due to bending and shear,

$$V_1=\frac{1}{2}\int\int\left[\frac{M_x^2}{D_x}-\left(\frac{\mu_y}{D_y}+\frac{\mu_x}{D_x}\right)M_xM_y+\frac{M_y^2}{D_y}+2\frac{M_{xy}^2}{D_{xy}}+\frac{Q_x^2}{D_{Q_x}}+\frac{Q_y^2}{D_{Q_y}}\right]dx\,dy \tag{25}$$

Elimination of M_x, M_y, and M_{xy} by use of equations (12) transforms the strain-energy expression (25) into

$$V_1=\frac{1}{2}\int\int\left\{\frac{D_x}{1-\mu_x\mu_y}\left[\frac{\partial}{\partial x}\left(\frac{\partial w}{\partial x}-\frac{Q_x}{D_{Q_x}}\right)\right]^2+\frac{D_x\mu_y+D_y\mu_x}{1-\mu_x\mu_y}\left[\frac{\partial}{\partial x}\left(\frac{\partial w}{\partial x}-\frac{Q_x}{D_{Q_x}}\right)\right]\left[\frac{\partial}{\partial y}\left(\frac{\partial w}{\partial y}-\frac{Q_y}{D_{Q_y}}\right)\right]+\right.$$

$$\left.\frac{D_y}{1-\mu_x\mu_y}\left[\frac{\partial}{\partial y}\left(\frac{\partial w}{\partial y}-\frac{Q_y}{D_{Q_y}}\right)\right]^2+\frac{D_{xy}}{2}\left[\frac{\partial}{\partial x}\left(\frac{\partial w}{\partial y}-\frac{Q_y}{D_{Q_y}}\right)+\frac{\partial}{\partial y}\left(\frac{\partial w}{\partial x}-\frac{Q_x}{D_{Q_x}}\right)\right]^2+\frac{Q_x^2}{D_{Q_x}}+\frac{Q_y^2}{D_{Q_y}}\right\}dx\,dy \tag{26}$$

In addition to the strain energy of bending and shear, there is the energy of stretching of the middle surface produced by the forces N_x, N_y, and N_{xy}. In small-deflection theory, these forces are assumed to remain constant during lateral deflection. The strain energy of middle-surface stretching is therefore a constant independent of the lateral deflection. This energy does not affect any solution and may be omitted from consideration.

POTENTIAL ENERGY OF EXTERNAL FORCES

The potential energy acquired by the external forces in the course of the lateral deflection of the plate is independent of the internal construction details of the plate and depends only on the displacements of the middle surface. The potential-energy expression for the orthotropic sandwich plate is therefore the same as for the ordinary homogeneous isotropic plate; that part of the expression due to the forces N_x, N_y, and N_{xy} at the boundaries is given by the negative of expression (201) of reference 5. If to this part is added the potential energy acquired by the lateral loads, the resulting expression for the potential energy of the external forces is

$$V_2=\frac{1}{2}\int\int\left[-2qw+N_x\left(\frac{\partial w}{\partial x}\right)^2+N_y\left(\frac{\partial w}{\partial y}\right)^2+2N_{xy}\frac{\partial w}{\partial x}\frac{\partial w}{\partial y}\right]dx\,dy \tag{27}$$

Equation (27) applies only when the reactions do no work and therefore acquire no potential energy in the course of the plate's deflection. The most commonly assumed boundaries satisfying this condition are free, simply supported, and clamped edges. The potential-energy expression for plates with more general boundary conditions must include terms corresponding to the work of the reaction forces. This more general case is considered in appendix C.

In this section equation (27) has been established by means of physical reasoning. A more rigorous derivation of equation (27) for the special case of a rectangular plate is given in appendix D.

POTENTIAL ENERGY OF SYSTEM

The total potential energy V of the system comprising the plate and the forces acting on it is the sum of the strain energy V_1 and the potentital energy of the external forces V_2 or, by addition of equations (26) and (27),

$$V=\frac{1}{2}\int\int\left\{\frac{D_x}{1-\mu_x\mu_y}\left[\frac{\partial}{\partial x}\left(\frac{\partial w}{\partial x}-\frac{Q_x}{D_{Q_x}}\right)\right]^2+\frac{D_x\mu_y+D_y\mu_x}{1-\mu_x\mu_y}\left[\frac{\partial}{\partial x}\left(\frac{\partial w}{\partial x}-\frac{Q_x}{D_{Q_x}}\right)\right]\left[\frac{\partial}{\partial y}\left(\frac{\partial w}{\partial y}-\frac{Q_y}{D_{Q_y}}\right)\right]+\right.$$

$$\left.\frac{D_y}{1-\mu_x\mu_y}\left[\frac{\partial}{\partial y}\left(\frac{\partial w}{\partial y}-\frac{Q_y}{D_{Q_y}}\right)\right]^2+\frac{D_{xy}}{2}\left[\frac{\partial}{\partial x}\left(\frac{\partial w}{\partial y}-\frac{Q_y}{D_{Q_y}}\right)+\frac{\partial}{\partial y}\left(\frac{\partial w}{\partial x}-\frac{Q_x}{D_{Q_x}}\right)\right]^2+\frac{Q_x^2}{D_{Q_x}}+\frac{Q_y^2}{D_{Q_y}}\right\}dx\,dy+$$

$$\frac{1}{2}\int\int\left[-2qw+N_x\left(\frac{\partial w}{\partial x}\right)^2+N_y\left(\frac{\partial w}{\partial y}\right)^2+2N_{xy}\frac{\partial w}{\partial x}\frac{\partial w}{\partial y}\right]dx\,dy \tag{28}$$

The above expression applies when the boundary reactions do no work and therefore acquire no potential energy in the course of the plate's deflection. This equation is therefore applicable when the edges of the plate are free, simply supported, or clamped. The potential-energy expression for a plate with more general boundary conditions is given in appendix C.

RECAPITULATION OF PRINCIPAL RESULTS

1. The physical properties needed for small-deflection analysis of an orthotropic plate in which deflections due to transverse shear are to be considered are the flexural stiffnesses D_x and D_y, the corresponding Poisson ratios μ_x and μ_y defined in terms of curvatures, the twisting stiffness D_{xy}, and the transverse shear stiffnesses D_{Q_x} and D_{Q_y}. These constants can be evaluated theoretically or by tests on samples of the plate as described in appendix A. Four of these constants are related by the reciprocal relationship $\mu_x D_y = \mu_y D_x$ derived in appendix B.

2. The differential equations relating the deflections w, the lateral load q, and the internal forces and moments N_x, N_y, N_{xy}, Q_x, Q_y, M_x, M_y, and M_{xy} are

$$\frac{\partial^2 w}{\partial x^2} = -\frac{M_x}{D_x} + \mu_y \frac{M_y}{D_y} + \frac{1}{D_{Q_x}} \frac{\partial Q_x}{\partial x}$$

$$\frac{\partial^2 w}{\partial y^2} = -\frac{M_y}{D_y} + \mu_x \frac{M_x}{D_x} + \frac{1}{D_{Q_y}} \frac{\partial Q_y}{\partial y}$$

$$\frac{\partial^2 w}{\partial x \partial y} = \frac{M_{xy}}{D_{xy}} + \frac{1}{2} \frac{1}{D_{Q_x}} \frac{\partial Q_x}{\partial y} + \frac{1}{2} \frac{1}{D_{Q_y}} \frac{\partial Q_y}{\partial x}$$

relating distortions to distorting moments and forces, and

$$\frac{\partial Q_x}{\partial x} + \frac{\partial Q_y}{\partial y} = -\left(q + N_x \frac{\partial^2 w}{\partial x^2} + N_y \frac{\partial^2 w}{\partial y^2} + 2N_{xy} \frac{\partial^2 w}{\partial x \partial y}\right)$$

$$Q_x = -\frac{\partial M_{xy}}{\partial y} + \frac{\partial M_x}{\partial x}$$

$$Q_y = -\frac{\partial M_{xy}}{\partial x} + \frac{\partial M_y}{\partial y}$$

for equilibrium.

3. The first three equations can be solved for M_x, M_y, and M_{xy} to obtain

$$M_x = -\frac{D_x}{1-\mu_x\mu_y}\left[\frac{\partial}{\partial x}\left(\frac{\partial w}{\partial x} - \frac{Q_x}{D_{Q_x}}\right) + \mu_y \frac{\partial}{\partial y}\left(\frac{\partial w}{\partial y} - \frac{Q_y}{D_{Q_y}}\right)\right]$$

$$M_y = -\frac{D_y}{1-\mu_x\mu_y}\left[\frac{\partial}{\partial y}\left(\frac{\partial w}{\partial y} - \frac{Q_y}{D_{Q_y}}\right) + \mu_x \frac{\partial}{\partial x}\left(\frac{\partial w}{\partial x} - \frac{Q_x}{D_{Q_x}}\right)\right]$$

$$M_{xy} = \frac{1}{2} D_{xy}\left[\frac{\partial}{\partial x}\left(\frac{\partial w}{\partial y} - \frac{Q_y}{D_{Q_y}}\right) + \frac{\partial}{\partial y}\left(\frac{\partial w}{\partial x} - \frac{Q_x}{D_{Q_x}}\right)\right]$$

Substitution of these expressions into the last three equations and solution of the resulting equations by means of operational determinants give the following differential equations with variables separated, for the case in which N_x, N_y, and N_{xy} are constant throughout the plate:

$$[D]w = -[M]q$$

$$[D]Q_x = -[N]q$$

$$[D]Q_y = -[P]q$$

where $[D]$, $[M]$, $[N]$, and $[P]$ are differential operators defined by equations (14).

4. Three types of support commonly assumed at the boundaries of a plate are no support (free edge), simple support, and clamping. These types of support can be described in terms of deflection, shears, and moments for an edge parallel to the y-axis as follows:

For a free edge,

$$M_x = 0$$

$$M_{xy} = 0$$

$$Q_x + N_x \frac{\partial w}{\partial x} + N_{xy} \frac{\partial w}{\partial y} = 0$$

For a simply supported edge at which the support is applied over the entire thickness,

$$w = 0$$

$$M_x = 0$$

$$\frac{Q_y}{D_{Q_y}} = 0$$

For a simply supported edge at which the support is applied only to the middle surface,

$$w = 0$$

$$M_x = 0$$

$$M_{xy} = 0$$

For a clamped edge at which the support is applied over the entire thickness,

$$w = 0$$

$$\frac{\partial w}{\partial x} - \frac{Q_x}{D_{Q_x}} = 0$$

$$\frac{Q_y}{D_{Q_y}} = 0$$

For a clamped edge at which the support is applied only to the middle surface (a type of support very unlikely to be met in practice),

$$w = 0$$

$$\frac{\partial w}{\partial x} - \frac{Q_x}{D_{Q_x}} = 0$$

$$M_{xy} = 0$$

The conditions for an edge parallel to the x-axis can be written by replacing x by y and vice versa, except in the subscripts of M_{xy} and N_{xy}.

Boundary conditions can also be written for more general types of support. (See appendix C.)

5. The potential energy of a plate in which the middle-surface forces are assumed to remain unchanged in the course of the plate's deflection and for which the moments and vertical forces at the boundaries do no work is

$$V=\frac{1}{2}\int\int\left\{\frac{D_x}{1-\mu_x\mu_y}\left[\frac{\partial}{\partial x}\left(\frac{\partial w}{\partial x}-\frac{Q_x}{D_{Q_x}}\right)\right]^2+\frac{D_x\mu_y+D_y\mu_x}{1-\mu_x\mu_y}\left[\frac{\partial}{\partial x}\left(\frac{\partial w}{\partial x}-\frac{Q_x}{D_{Q_x}}\right)\right]\left[\frac{\partial}{\partial y}\left(\frac{\partial w}{\partial y}-\frac{Q_y}{D_{Q_y}}\right)\right]+\frac{D_y}{1-\mu_x\mu_y}\left[\frac{\partial}{\partial y}\left(\frac{\partial w}{\partial y}-\frac{Q_y}{D_{Q_y}}\right)\right]^2+\frac{D_{xy}}{2}\left[\frac{\partial}{\partial x}\left(\frac{\partial w}{\partial y}-\frac{Q_y}{D_{Q_y}}\right)+\frac{\partial}{\partial y}\left(\frac{\partial w}{\partial x}-\frac{Q_x}{D_{Q_x}}\right)\right]^2+\frac{Q_x^2}{D_{Q_x}}+\frac{Q_y^2}{D_{Q_y}}\right\}dx\,dy+\frac{1}{2}\int\int\left[-2qw+N_x\left(\frac{\partial w}{\partial x}\right)^2+N_y\left(\frac{\partial w}{\partial y}\right)^2+2N_{xy}\frac{\partial w}{\partial x}\frac{\partial w}{\partial y}\right]dx\,dy$$

The most important types of boundary to which this expression applies are free, simply supported, or clamped. For more general types of support, in which the boundary reactions do work in the course of the plate's deflection, the potential-energy expression must be extended to include terms representing the potential energy of the reactions.

The calculus of variations can be used to show that in order for the potential energy to be a minimum the differential equations of equilibrium and the boundary conditions must be satisfied. (See appendix C.)

LANGLEY MEMORIAL AERONAUTICAL LABORATORY,
NATIONAL ADVISORY COMMITTEE FOR AERONAUTICS,
LANGLEY FIELD, VA., *September 30, 1947.*

APPENDIX A

TESTS TO DETERMINE PHYSICAL CONSTANTS

The purpose of this appendix is to give descriptions of possible tests for determining the physical constants. No consideration has been given to details of testing technique. Practical considerations may dictate changes in the test procedures described or the quantities to be measured. These changes, however, will not be of fundamental importance.

Test for D_x and μ_x.—The flexural stiffness D_x can be determined by cutting a beam from the plate in the x-direction and loading it as shown in figure 3. The supports and loading should be such as to make for minimum interference with the anticlastic curvature. The middle section is subjected only to a pure moment Pd; the curvature $\frac{\partial^2 w}{\partial x^2}$ in this part can be determined from deflection or strain-gage measurements, and the flexural stiffness is given by equation (1):

$$D_x=-\frac{M_x}{\frac{\partial^2 w}{\partial x^2}}=-\frac{Pd}{b\frac{\partial^2 w}{\partial x^2}} \qquad \text{(A1)}$$

where b is the width of the beam. If the transverse curvature $\frac{\partial^2 w}{\partial y^2}$ is measured (the beam must be wide enough to permit accurate measurement of this curvature), the Poisson ratio μ_x can be calculated from equation (2):

$$\mu_x=-\frac{\frac{\partial^2 w}{\partial y^2}}{\frac{\partial^2 w}{\partial x^2}} \qquad \text{(A2)}$$

Test for D_{Q_x}.—The transverse shear stiffness D_{Q_x} can be determined by loading the beam with a uniform load as shown

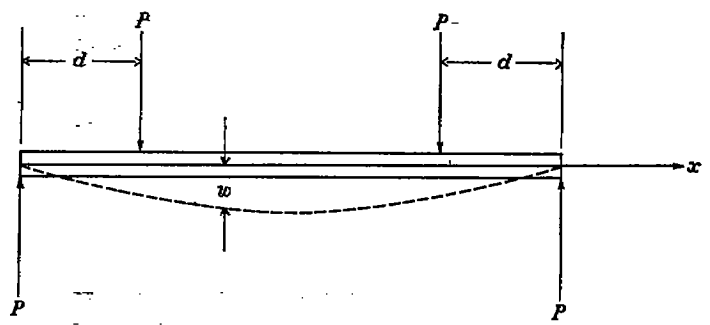

FIGURE 3.—Test to determine D_x and μ_x.

in figure 4. The beam at any station x is subjected to a known bending moment M_x equal to $\frac{1}{b}\left(\frac{pLx}{2}-\frac{px^2}{2}\right)$ and a rate of change of transverse shear $\frac{\partial Q_x}{\partial x}$ equal to $-\frac{p}{b}$. The curvature $\frac{\partial^2 w}{\partial x^2}$ along the beam can be determined from deflection measurements. (Strain-gage measurements on upper and lower surfaces of beam are inappropriate because curvature due to rate of change of shear is not accompanied by stretching of the surfaces.) The flexural stiffness D_x having been previously determined and the transverse moment M_y taken to be zero, equation (9a) can be solved for D_{Q_x} to obtain

$$D_{Q_x}=\frac{\frac{\partial Q_x}{\partial x}}{\frac{\partial^2 w}{\partial x^2}+\frac{M_x}{D_x}}=\frac{-\frac{p}{b}}{\frac{\partial^2 w}{\partial x^2}+\frac{1}{D_x b}\left(\frac{pLx}{2}-\frac{px^2}{2}\right)} \qquad \text{(A3)}$$

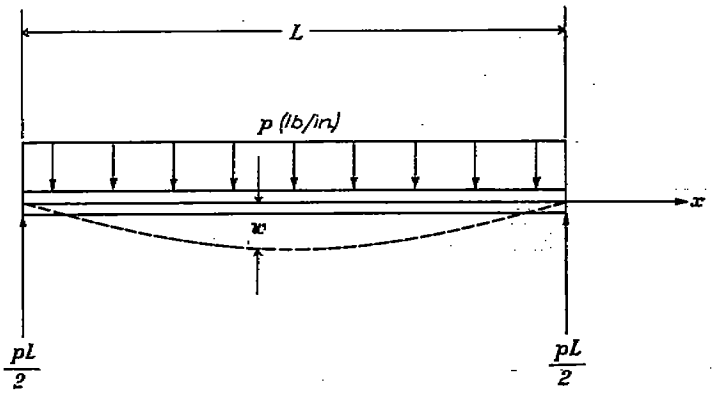

FIGURE 4.—Test to determine D_{Q_y}.

Tests for D_y, μ_y, and D_{Q_y}.—The constants D_y, μ_y, and D_{Q_y} can be determined by tests similar to those already described but on a beam cut in the y-direction.

Test for D_{xy}.—The twisting stiffness D_{xy} can be determined by cutting a rectangular panel from the plate, two edges parallel to the x-axis and two edges parallel to the y-axis, placing some reinforcement at the edges to keep the boundary cross sections rectangular, and loading the panel at the corners as shown in figure 5. This loading is statically equivalent to a twisting moment M_{xy} distributed around the edges and equal to $\frac{P}{2}$. If the edge reinforcements keep the boundary cross sections rectangular, then the shear angles γ_x and γ_y can be assumed to be zero and

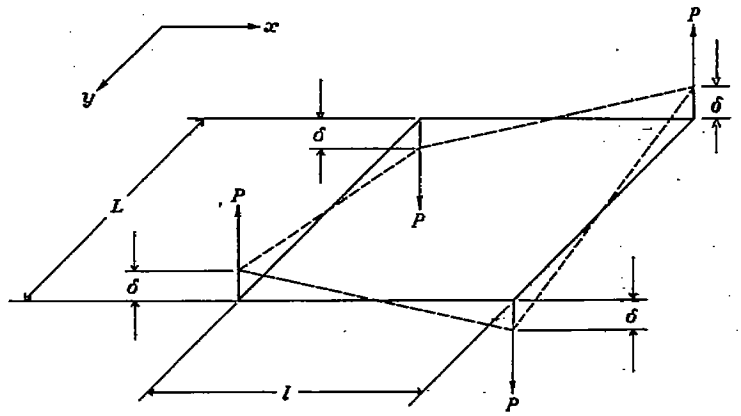

FIGURE 5.—Test to determine D_{xy}.

the plate to be in a condition of pure twist with no Q_x or Q_y loading present. The twist $\frac{\partial^2 w}{\partial x \partial y}$ can be calculated from the measured corner deflections as

$$\frac{\partial^2 w}{\partial x \partial y}=\frac{4\delta}{lL}$$

The stiffness D_{xy} is calculated from the formula that applies when only M_{xy} is acting, namely, equation (5):

$$D_{xy}=\frac{M_{xy}}{\frac{\partial^2 w}{\partial x \partial y}}=\frac{P/2}{4\delta/lL}=\frac{PlL}{8\delta} \tag{A4}$$

APPENDIX B

DERIVATION OF RELATIONSHIP $\mu_x D_y=\mu_y D_x$

Betti's reciprocal theorem (reference 10) can be expressed as follows: Let two groups of forces be applied to a structure, each group of forces producing distortions that are directly proportional to the magnitude of the forces; then, the work of the first group of forces acting through the displacements produced by the second group is equal to the work of the second group acting through the displacements produced by the first.

The structure to which this principle is applied is the element $dx\,dy$ of figure 1. Let the first group of forces consist of the moments $M_x\,dy$. The distortions produced are the curvatures $\frac{\partial^2 w}{\partial x^2}$ and $\frac{\partial^2 w}{\partial y^2}$ where, from equations (1) and (2),

$$\frac{\partial^2 w}{\partial x^2}=-\frac{M_x}{D_x}$$

and

$$\frac{\partial^2 w}{\partial y^2}=\mu_x\frac{M_x}{D_x}$$

The second group of forces are the moments $M_y\,dx$, and the distortions produced by the group are the curvatures $\frac{\partial^2 w}{\partial y^2}$ and $\frac{\partial^2 w}{\partial x^2}$ where, from equations (3) and (4),

$$\frac{\partial^2 w}{\partial y^2}=-\frac{M_y}{D_y}$$

and

$$\frac{\partial^2 w}{\partial x^2}=\mu_y\frac{M_y}{D_y}$$

The work done by the first group of forces $M_x\,dy$ in association with the curvature $\mu_y\frac{M_y}{D_y}$ produced by the second group is

$$-M_x\,dy\left(\mu_y\frac{M_y}{D_y}\,dx\right)$$

or

$$-M_xM_y\frac{\mu_y}{D_y}\,dx\,dy$$

Similarly, the work done by the second group of forces $M_y\,dx$ in association with the curvature $\mu_x\frac{M_x}{D_x}$ produced by the first group is

$$-M_y\,dx\left(\mu_x\frac{M_x}{D_x}\,dy\right)$$

or

$$-M_xM_y\frac{\mu_x}{D_x}\,dx\,dy$$

Equating the expressions for the two works and eliminating the common factor $-M_xM_y\,dx\,dy$ give

$$\frac{\mu_y}{D_y}=\frac{\mu_x}{D_x}$$

from which is obtained equation (8).

APPENDIX C

DERIVATION OF EQUILIBRIUM EQUATIONS AND GENERAL BOUNDARY CONDITIONS BY A VARIATIONAL METHOD

In the body of this paper only free, simply supported, and clamped edges were considered. These types of boundary conditions are characterized by the condition that the moments and vertical forces at the boundaries acquire no potential energy as a result of the plate's deflection. This condition holds by virtue of the fact that either the moments and forces at the boundaries are zero or the points of application of the nonzero boundary reactions do not move. A more general type of support, in which neither of these conditions holds, is discussed in the following section.

Potential-energy expression.—For simplicity a rectangular plate with edges $x=0,a$ and $y=0,b$ is considered. The boundary reactions of the plate consist of distributed bending moments, twisting moments, and vertical forces statically equivalent to the limits of the internal moments and shears as the boundaries are approached. The intensities of the reactions (moment or force per unit edge length) are denoted by $\overline{M}_x$, $\overline{M}_{xy}$, and $\overline{Q}_x$ along those boundaries parallel to the y-axis and $\overline{M}_y$, $\overline{M}_{xy}$, and $\overline{Q}_y$ along those boundaries parallel to the x-axis. (Note that the symbols used for the reactions are distinguished from the corresponding symbols for the internal forces by means of bars placed above the symbols.)

The potential energy of a plate the edges of which are other than free, simply supported, or clamped can be written by adding to equation (28) line integrals representing the potential energy of the reactions. The resulting expression is

$$V=\frac{1}{2}\int_0^b\int_0^a\left\{\frac{D_x}{1-\mu_x\mu_y}\left[\frac{\partial}{\partial x}\left(\frac{\partial w}{\partial x}-\frac{Q_x}{D_{Q_x}}\right)\right]^2+\frac{D_x\mu_y+D_y\mu_x}{1-\mu_x\mu_y}\left[\frac{\partial}{\partial x}\left(\frac{\partial w}{\partial x}-\frac{Q_x}{D_{Q_x}}\right)\right]\left[\frac{\partial}{\partial y}\left(\frac{\partial w}{\partial y}-\frac{Q_y}{D_{Q_y}}\right)\right]+\frac{D_y}{1-\mu_x\mu_y}\left[\frac{\partial}{\partial y}\left(\frac{\partial w}{\partial y}-\frac{Q_y}{D_{Q_y}}\right)\right]^2+\right.$$
$$\left.\frac{D_{xy}}{2}\left[\frac{\partial}{\partial x}\left(\frac{\partial w}{\partial y}-\frac{Q_y}{D_{Q_y}}\right)+\frac{\partial}{\partial y}\left(\frac{\partial w}{\partial x}-\frac{Q_x}{D_{Q_x}}\right)\right]^2+\frac{Q_x^2}{D_{Q_x}}+\frac{Q_y^2}{D_{Q_y}}\right\}dx\,dy+\frac{1}{2}\int_0^b\int_0^a\left[-2qw+N_x\left(\frac{\partial w}{\partial x}\right)^2+N_y\left(\frac{\partial w}{\partial y}\right)^2+2N_{xy}\frac{\partial w}{\partial x}\frac{\partial w}{\partial y}\right]dx\,dy-$$
$$\int_0^b\left[-\overline{M}_x\left(\frac{\partial w}{\partial x}-\frac{Q_x}{D_{Q_x}}\right)+\overline{M}_{xy}\left(\frac{\partial w}{\partial y}-\frac{Q_y}{D_{Q_y}}\right)+\overline{Q}_xw\right]\Bigg|_0^a dy-\int_0^a\left[-\overline{M}_y\left(\frac{\partial w}{\partial y}-\frac{Q_y}{D_{Q_y}}\right)+\overline{M}_{xy}\left(\frac{\partial w}{\partial x}-\frac{Q_x}{D_{Q_x}}\right)+\overline{Q}_yw\right]\Bigg|_0^b dx \tag{C1}$$

In the last two integrals, representing the potential energy of the boundary shears and moments, $\left(\frac{\partial w}{\partial x}-\frac{Q_x}{D_{Q_x}}\right)$ and $\left(\frac{\partial w}{\partial y}-\frac{Q_y}{D_{Q_y}}\right)$ are the rotations parallel to the xz-plane and yz-plane, respectively, of an originally vertical line element in the edge of the plate.

Minimization of total potential energy.—The conditions that must be satisfied if the total potential energy V of the system is to be a minimum are now considered. By the calculus of variations (reference 11), minimization of V requires the vanishing of the first variation δV. The first variation can be evaluated from equation (C1) as

$$\delta V=\frac{1}{2}\int_0^b\int_0^a\left\{\frac{2D_x}{1-\mu_x\mu_y}\left[\frac{\partial}{\partial x}\left(\frac{\partial w}{\partial x}-\frac{Q_x}{D_{Q_x}}\right)\right]\left[\frac{\partial\delta\left(\frac{\partial w}{\partial x}-\frac{Q_x}{D_{Q_x}}\right)}{\partial x}\right]+\left(\frac{D_x\mu_y+D_y\mu_x}{1-\mu_x\mu_y}\right)\left[\frac{\partial}{\partial x}\left(\frac{\partial w}{\partial x}-\frac{Q_x}{D_{Q_x}}\right)\right]\left[\frac{\partial\delta\left(\frac{\partial w}{\partial y}-\frac{Q_y}{D_{Q_y}}\right)}{\partial y}\right]+\right.$$
$$\left(\frac{D_x\mu_y+D_y\mu_x}{1-\mu_x\mu_y}\right)\left[\frac{\partial}{\partial y}\left(\frac{\partial w}{\partial y}-\frac{Q_y}{D_{Q_y}}\right)\right]\left[\frac{\partial\delta\left(\frac{\partial w}{\partial x}-\frac{Q_x}{D_{Q_x}}\right)}{\partial x}\right]+\frac{2D_y}{1-\mu_x\mu_y}\left[\frac{\partial}{\partial y}\left(\frac{\partial w}{\partial y}-\frac{Q_y}{D_{Q_y}}\right)\right]\left[\frac{\partial\delta\left(\frac{\partial w}{\partial y}-\frac{Q_y}{D_{Q_y}}\right)}{\partial y}\right]+$$
$$\left.D_{xy}\left[\frac{\partial}{\partial x}\left(\frac{\partial w}{\partial y}-\frac{Q_y}{D_{Q_y}}\right)+\frac{\partial}{\partial y}\left(\frac{\partial w}{\partial x}-\frac{Q_x}{D_{Q_x}}\right)\right]\left[\frac{\partial\delta\left(\frac{\partial w}{\partial y}-\frac{Q_y}{D_{Q_y}}\right)}{\partial x}+\frac{\partial\delta\left(\frac{\partial w}{\partial x}-\frac{Q_x}{D_{Q_x}}\right)}{\partial y}\right]+\frac{2Q_x}{D_{Q_x}}\delta Q_x+\frac{2Q_y}{D_{Q_y}}\delta Q_y\right\}dx\,dy+$$
$$\frac{1}{2}\int_0^b\int_0^a\left[-2q\delta w+2N_x\frac{\partial w}{\partial x}\frac{\partial\delta w}{\partial x}+2N_y\frac{\partial w}{\partial y}\frac{\partial\delta w}{\partial y}+2N_{xy}\left(\frac{\partial w}{\partial x}\frac{\partial\delta w}{\partial y}+\frac{\partial w}{\partial y}\frac{\partial\delta w}{\partial x}\right)\right]dx\,dy-$$
$$\int_0^b\left[-\overline{M}_x\delta\left(\frac{\partial w}{\partial x}-\frac{Q_x}{D_{Q_x}}\right)+\overline{M}_{xy}\delta\left(\frac{\partial w}{\partial y}-\frac{Q_y}{D_{Q_y}}\right)+\overline{Q}_x\delta w\right]\Bigg|_0^a dy-\int_0^a\left[-\overline{M}_y\delta\left(\frac{\partial w}{\partial y}-\frac{Q_y}{D_{Q_y}}\right)+\overline{M}_{xy}\delta\left(\frac{\partial w}{\partial x}-\frac{Q_x}{D_{Q_x}}\right)+\overline{Q}_y\delta w\right]\Bigg|_0^b dx$$

Those terms in the above expression that contain derivatives of $\delta\left(\frac{\partial w}{\partial x}-\frac{Q_x}{D_{Q_x}}\right)$, $\delta\left(\frac{\partial w}{\partial y}-\frac{Q_y}{D_{Q_y}}\right)$, and δw can be integrated by parts so as to reduce the order of the derivatives. The resulting expression for δV contains surface integrals of the type

$$\iint(\ldots)\delta\left(\frac{\partial w}{\partial x}-\frac{Q_x}{D_{Q_x}}\right)dx\,dy$$

which can be broken up into

$$\int\int(\ldots)\frac{\partial\delta w}{\partial x}\,dx\,dy$$

and

$$-\int\int(\ldots)\,\delta\frac{Q_x}{D_{Q_x}}\,dx\,dy$$

The first of these two integrals can be integrated again by parts so as to leave only terms containing δw rather than derivatives of δw. With the aforementioned integrations by parts performed and after considerable rearrangement of terms, the expression for δV becomes

$$\begin{aligned}
\delta V=&\int_0^b\int_0^a\left\{\frac{D_x}{1-\mu_x\mu_y}\left[\frac{\partial^3}{\partial x^3}\left(\frac{\partial w}{\partial x}-\frac{Q_x}{D_{Q_x}}\right)\right]+\frac{1}{2}\left(\frac{D_x\mu_y+D_y\mu_x}{1-\mu_x\mu_y}\right)\left[\frac{\partial^3}{\partial x\,\partial y^2}\left(\frac{\partial w}{\partial x}-\frac{Q_x}{D_{Q_x}}\right)\right]+\right.\\
&\frac{1}{2}\left(\frac{D_x\mu_y+D_y\mu_x}{1-\mu_x\mu_y}\right)\left[\frac{\partial^3}{\partial x^2\,\partial y}\left(\frac{\partial w}{\partial y}-\frac{Q_y}{D_{Q_y}}\right)\right]+\frac{D_y}{1-\mu_x\mu_y}\left[\frac{\partial^3}{\partial y^3}\left(\frac{\partial w}{\partial y}-\frac{Q_y}{D_{Q_y}}\right)\right]+\\
&\left.D_{xy}\left[\frac{\partial^3}{\partial x^2\,\partial y}\left(\frac{\partial w}{\partial y}-\frac{Q_y}{D_{Q_y}}\right)+\frac{\partial^3}{\partial x\,\partial y^2}\left(\frac{\partial w}{\partial x}-\frac{Q_x}{D_{Q_x}}\right)\right]-q-N_x\frac{\partial^2 w}{\partial x^2}-N_y\frac{\partial^2 w}{\partial y^2}-2N_{xy}\frac{\partial^2 w}{\partial x\,\partial y}\right\}\delta w\,dx\,dy+\\
&\int_0^b\int_0^a\left\{\frac{D_x}{1-\mu_x\mu_y}\left[\frac{\partial^2}{\partial x^2}\left(\frac{\partial w}{\partial x}-\frac{Q_x}{D_{Q_x}}\right)\right]+\frac{1}{2}\left(\frac{D_x\mu_y+D_y\mu_x}{1-\mu_x\mu_y}\right)\left[\frac{\partial^2}{\partial x\,\partial y}\left(\frac{\partial w}{\partial y}-\frac{Q_y}{D_{Q_y}}\right)\right]+\right.\\
&\left.\frac{1}{2}D_{xy}\left[\frac{\partial^2}{\partial x\,\partial y}\left(\frac{\partial w}{\partial y}-\frac{Q_y}{D_{Q_y}}\right)+\frac{\partial^2}{\partial y^2}\left(\frac{\partial w}{\partial x}-\frac{Q_x}{D_{Q_x}}\right)\right]+Q_x\right\}\delta\frac{Q_x}{D_{Q_x}}\,dx\,dy+\\
&\int_0^b\int_0^a\left\{\frac{1}{2}\left(\frac{D_x\mu_y+D_y\mu_x}{1-\mu_x\mu_y}\right)\left[\frac{\partial^2}{\partial x\,\partial y}\left(\frac{\partial w}{\partial x}-\frac{Q_x}{D_{Q_x}}\right)\right]+\frac{D_y}{1-\mu_x\mu_y}\left[\frac{\partial^2}{\partial x^2}\left(\frac{\partial w}{\partial y}-\frac{Q_y}{D_{Q_y}}\right)\right]+\right.\\
&\left.\frac{1}{2}D_{xy}\left[\frac{\partial^2}{\partial x^2}\left(\frac{\partial w}{\partial y}-\frac{Q_y}{D_{Q_y}}\right)+\frac{\partial^2}{\partial x\,\partial y}\left(\frac{\partial w}{\partial x}-\frac{Q_x}{D_{Q_x}}\right)\right]+Q_y\right\}\delta\frac{Q_y}{D_{Q_y}}\,dx\,dy+\\
&\int_0^b\left\{-\frac{D_x}{1-\mu_x\mu_y}\left[\frac{\partial^2}{\partial x^2}\left(\frac{\partial w}{\partial x}-\frac{Q_x}{D_{Q_x}}\right)\right]-\frac{1}{2}\left(\frac{D_x\mu_y+D_y\mu_x}{1-\mu_x\mu_y}\right)\left[\frac{\partial^2}{\partial x\,\partial y}\left(\frac{\partial w}{\partial y}-\frac{Q_y}{D_{Q_y}}\right)\right]-\right.\\
&\left.\frac{1}{2}D_{xy}\left[\frac{\partial^2}{\partial x\,\partial y}\left(\frac{\partial w}{\partial y}-\frac{Q_y}{D_{Q_y}}\right)+\frac{\partial^2}{\partial y^2}\left(\frac{\partial w}{\partial x}-\frac{Q_x}{D_{Q_x}}\right)\right]+N_x\frac{\partial w}{\partial x}+N_{xy}\frac{\partial w}{\partial y}-\overline{Q}_x\right\}\delta w\Big|_0^a dy+\\
&\int_0^b\left\{\frac{D_x}{1-\mu_x\mu_y}\left[\frac{\partial}{\partial x}\left(\frac{\partial w}{\partial x}-\frac{Q_x}{D_{Q_x}}\right)\right]+\frac{1}{2}\left(\frac{D_x\mu_y+D_y\mu_x}{1-\mu_x\mu_y}\right)\left[\frac{\partial}{\partial y}\left(\frac{\partial w}{\partial y}-\frac{Q_y}{D_{Q_y}}\right)\right]+\overline{M}_x\right\}\delta\left(\frac{\partial w}{\partial x}-\frac{Q_x}{D_{Q_x}}\right)\Big|_0^a dy+\\
&\int_0^b\left\{\frac{1}{2}D_{xy}\left[\frac{\partial}{\partial x}\left(\frac{\partial w}{\partial y}-\frac{Q_y}{D_{Q_y}}\right)+\frac{\partial}{\partial y}\left(\frac{\partial w}{\partial x}-\frac{Q_x}{D_{Q_x}}\right)\right]-\overline{M}_{xy}\right\}\delta\left(\frac{\partial w}{\partial y}-\frac{Q_y}{D_{Q_y}}\right)\Big|_0^a dy+\\
&\int_0^a\left\{-\frac{1}{2}\left(\frac{D_x\mu_y+D_y\mu_x}{1-\mu_x\mu_y}\right)\left[\frac{\partial^2}{\partial x\,\partial y}\left(\frac{\partial w}{\partial x}-\frac{Q_x}{D_{Q_x}}\right)\right]-\frac{D_y}{1-\mu_x\mu_y}\left[\frac{\partial^2}{\partial y^2}\left(\frac{\partial w}{\partial y}-\frac{Q_y}{D_{Q_y}}\right)\right]-\right.\\
&\left.\frac{1}{2}D_{xy}\left[\frac{\partial^2}{\partial x^2}\left(\frac{\partial w}{\partial y}-\frac{Q_y}{D_{Q_y}}\right)+\frac{\partial^2}{\partial x\,\partial y}\left(\frac{\partial w}{\partial x}-\frac{Q_x}{D_{Q_x}}\right)\right]+N_y\frac{\partial w}{\partial y}+N_{xy}\frac{\partial w}{\partial x}-\overline{Q}_y\right\}\delta w\Big|_0^b dx+\\
&\int_0^a\left\{\frac{1}{2}\left(\frac{D_x\mu_y+D_y\mu_x}{1-\mu_x\mu_y}\right)\left[\frac{\partial}{\partial x}\left(\frac{\partial w}{\partial x}-\frac{Q_x}{D_{Q_x}}\right)\right]+\frac{D_y}{1-\mu_x\mu_y}\left[\frac{\partial}{\partial y}\left(\frac{\partial w}{\partial y}-\frac{Q_y}{D_{Q_y}}\right)\right]+\overline{M}_y\right\}\delta\left(\frac{\partial w}{\partial y}-\frac{Q_y}{D_{Q_y}}\right)\Big|_0^b dx+\\
&\int_0^a\left\{\frac{1}{2}D_{xy}\left[\frac{\partial}{\partial x}\left(\frac{\partial w}{\partial y}-\frac{Q_y}{D_{Q_y}}\right)+\frac{\partial}{\partial y}\left(\frac{\partial w}{\partial x}-\frac{Q_x}{D_{Q_x}}\right)\right]-\overline{M}_{xy}\right\}\delta\left(\frac{\partial w}{\partial x}-\frac{Q_x}{D_{Q_x}}\right)\Big|_0^b dx
\end{aligned}$$

By virtue of equations (12) and (8), the above expression for δV can be rewritten as

$$\delta V=\int_0^b\int_0^a\left[-\frac{\partial^2 M_x}{\partial x^2}+2\frac{\partial^2 M_{xy}}{\partial x\partial y}-\frac{\partial^2 M_y}{\partial y^2}-\left(q+N_x\frac{\partial^2 w}{\partial x^2}+N_y\frac{\partial^2 w}{\partial y^2}+2N_{xy}\frac{\partial^2 w}{\partial x\partial y}\right)\right]\delta w\,dx\,dy+$$
$$\int_0^b\int_0^a\left(-\frac{\partial M_x}{\partial x}+\frac{\partial M_{xy}}{\partial y}+Q_x\right)\frac{\delta Q_x}{D_{Q_x}}\,dx\,dy+\int_0^b\int_0^a\left(-\frac{\partial M_y}{\partial y}+\frac{\partial M_{xy}}{\partial x}+Q_y\right)\frac{\delta Q_y}{D_{Q_y}}\,dx\,dy+$$
$$\int_0^b\left(\frac{\partial M_x}{\partial x}-\frac{\partial M_{xy}}{\partial y}+N_x\frac{\partial w}{\partial x}+N_{xy}\frac{\partial w}{\partial y}-\overline{Q}_x\right)\delta w\Big|_0^a dy-\int_0^b(M_x-\overline{M}_x)\,\delta\left(\frac{\partial w}{\partial x}-\frac{Q_x}{D_{Q_x}}\right)\Big|_0^a dy+$$
$$\int_0^b(M_{xy}-\overline{M}_{xy})\,\delta\left(\frac{\partial w}{\partial y}-\frac{Q_y}{D_{Q_y}}\right)\Big|_0^a dy+\int_0^a\left(\frac{\partial M_y}{\partial y}-\frac{\partial M_{xy}}{\partial x}+N_y\frac{\partial w}{\partial y}+N_{xy}\frac{\partial w}{\partial x}-\overline{Q}_y\right)\delta w\Big|_0^b dx-$$
$$\int_0^a(M_y-\overline{M}_y)\,\delta\left(\frac{\partial w}{\partial y}-\frac{Q_y}{D_{Q_y}}\right)\Big|_0^b dx+\int_0^a(M_{xy}-\overline{M}_{xy})\,\delta\left(\frac{\partial w}{\partial y}-\frac{Q_y}{D_{Q_y}}\right)\Big|_0^b dx$$

In order for δV as given by the above expression to be zero for all possible values of δw, $\delta\frac{Q_x}{D_{Q_x}}$, and $\delta\frac{Q_y}{D_{Q_y}}$, the various integrals must individually be zero. The following differential equations result from equating the surface integrals to zero:

$$\left.\begin{aligned}\frac{\partial^2 M_x}{\partial x^2}-2\frac{\partial^2 M_{xy}}{\partial x\partial y}+\frac{\partial^2 M_y}{\partial y^2}&=-\left(q+N_x\frac{\partial^2 w}{\partial x^2}+N_y\frac{\partial^2 w}{\partial y^2}+2N_{xy}\frac{\partial^2 w}{\partial x\partial y}\right)\\ Q_x&=-\frac{\partial M_{xy}}{\partial y}+\frac{\partial M_x}{\partial x}\\ Q_y&=-\frac{\partial M_{xy}}{\partial x}+\frac{\partial M_y}{\partial y}\end{aligned}\right\}\tag{C2}$$

By virtue of the last two of equations (C2), $\left(\frac{\partial M_x}{\partial x}-\frac{\partial M_{xy}}{\partial y}\right)$ and $\left(\frac{\partial M_y}{\partial y}-\frac{\partial M_{xy}}{\partial x}\right)$ in the line integrals can be replaced by Q_x and Q_y, respectively. Equating the line integrals to zero then gives the following boundary conditions required to insure that $\delta V=0$:

At $x=0,a$

$$\left.\begin{aligned}Q_x+N_x\frac{\partial w}{\partial x}+N_{xy}\frac{\partial w}{\partial y}&=\overline{Q}_x &&\text{or}\quad \delta w=0\\ M_x&=\overline{M}_x &&\text{or}\quad \delta\left(\frac{\partial w}{\partial x}-\frac{Q_x}{D_{Q_x}}\right)=0\\ M_{xy}&=\overline{M}_{xy} &&\text{or}\quad \delta\left(\frac{\partial w}{\partial y}-\frac{Q_y}{D_{Q_y}}\right)=0\end{aligned}\right\}\tag{C3}$$

At $y=0,b$

$$\left.\begin{aligned}Q_y+N_y\frac{\partial w}{\partial y}+N_{xy}\frac{\partial w}{\partial x}&=\overline{Q}_y &&\text{or}\quad \delta w=0\\ M_y&=\overline{M}_y &&\text{or}\quad \delta\left(\frac{\partial w}{\partial y}-\frac{Q_y}{D_{Q_y}}\right)=0\\ M_{xy}&=\overline{M}_{xy} &&\text{or}\quad \delta\left(\frac{\partial w}{\partial x}-\frac{Q_x}{D_{Q_x}}\right)=0\end{aligned}\right\}\tag{C4}$$

Equations (C2) are the differential equations that must be satisfied if the potential energy is to be a minimum. They will be recognized as the equations of equilibrium, equations (11).

Equations (C3) and (C4) are the boundary conditions that must be satisfied if the potential energy is to be a minimum. The left-hand groups of equations (C3) and (C4) imply that the limiting values of the internal forces and moments, as the edge of the plate is approached, must be in equilibrium with certain prescribed forces and moments externally applied at the edge (the prescribed forces and moments being designated by means of the horizontal bars). The right-hand groups of equations (C3) and (C4) imply that the displacements at the edge must have certain prescribed values.

The boundary conditions given by equations (15) to (19) for free, simply supported, and clamped edges parallel to the y-axis are special cases of equations (C3). For example, the boundary conditions for a simply supported edge (equations (16)) can be obtained from equation (C3) by prescribing the values of w, $\overline{M}_x$, and $\left(\frac{\partial w}{\partial y}-\frac{Q_y}{D_{Q_y}}\right)$ to be zero at the boundaries $x=0$, a.

If a plate is elastically supported at the boundaries, the elastic support may sometimes be conveniently thought of as made up of three rows of closely spaced discrete springs at each edge: a row of deflectional springs, a row of rotational springs, and a row of torsional springs, having the known stiffnesses per inch k_1, k_2, and k_3, which may vary along the edge. For this type of support the vertical shear reaction at any point along the edge is proportional to the vertical deflection at that point and the twisting and bending moment reactions are proportional to the corresponding rotations of an originally vertical line element in the edge. The boundary conditions for this type of support can be obtained from equations (C3) and (C4) by setting at $x=0$

$$\overline{Q}_x=k_1w \qquad \overline{M}_x=-k_2\left(\frac{\partial w}{\partial x}-\frac{Q_x}{D_{Q_x}}\right) \qquad \overline{M}_{xy}=k_3\left(\frac{\partial w}{\partial y}-\frac{Q_y}{D_{Q_y}}\right)$$

at $x=a$

$$\overline{Q}_x=-k_1w \qquad \overline{M}_x=k_2\left(\frac{\partial w}{\partial x}-\frac{Q_x}{D_{Q_x}}\right) \qquad \overline{M}_{xy}=-k_3\left(\frac{\partial w}{\partial y}-\frac{Q_y}{D_{Q_y}}\right)$$

at $y=0$

$$\overline{Q}_y=k_1w \qquad \overline{M}_y=-k_2\left(\frac{\partial w}{\partial y}-\frac{Q_y}{D_{Q_y}}\right) \qquad \overline{M}_{xy}=k_3\left(\frac{\partial w}{\partial x}-\frac{Q_x}{D_{Q_x}}\right)$$

at $y=b$

$$\overline{Q}_y=-k_1w \qquad \overline{M}_y=k_2\left(\frac{\partial w}{\partial y}-\frac{Q_y}{D_{Q_y}}\right) \qquad \overline{M}_{xy}=-k_3\left(\frac{\partial w}{\partial x}-\frac{Q_x}{D_{Q_x}}\right)$$

The signs in the above boundary conditions follow as a result of the directions assumed for positive shears and moments.

APPENDIX D

DERIVATION OF EQUATION (27) FOR THE POTENTIAL ENERGY OF THE EXTERNAL FORCES

A rectangular plate the edges of which are $x=0,a$ and $y=0,b$ is considered (fig. 6). The boundary conditions assumed are the usual conditions corresponding to zero work by the reactions; that is, each edge is either free, simply supported, or clamped.

The horizontal loads N_x, N_y, and N_{xy} are assumed first to be applied at the boundaries with no lateral load. As a result the middle plane (and all horizontal planes) of the plate stretches; thus, the constant stretching energy discussed previously in connection with the strain energy of the plate is produced, and slight shifts in the points of application of the edge forces N_x, N_y, and N_{xy} are caused. These new positions of the points of application are used as the arbitrary fixed reference points in any future measurements of the potential energy of the horizontal edge forces.

If the lateral load q is now applied, the middle surface acquires the displacements $w(x,y)$ in the z-direction, $u(x,y)$ in the x-direction, and $v(x,y)$ in the y-direction. As a result of these displacements, the lateral load acquires the potential energy

$$-\int_0^b\int_0^a qw\,dx\,dy \tag{D1}$$

and the edge forces acquire the potential energy

$$-\int_0^b\left(\left|N_xu\right|_0^a+\left|N_{xy}v\right|_0^a\right)dy-\int_0^a\left(\left|N_yv\right|_0^b+\left|N_{xy}u\right|_0^b\right)dx \tag{D2}$$

The moments and vertical forces at the boundaries do no work and therefore acquire no potential energy during deflection.

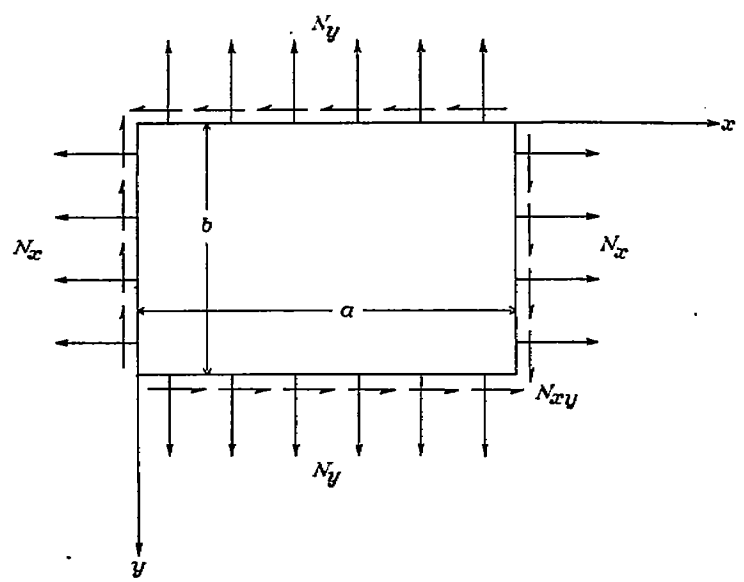

FIGURE 6.—Rectangular plate with horizontal forces applied to boundaries.

By use of the formula for integration by parts, expression (D2) for the potential energy of the edge forces can be rewritten in terms of the interior forces and displacements as

$$-\int_0^b\int_0^a\left[N_x\frac{\partial u}{\partial x}+N_y\frac{\partial v}{\partial y}+N_{xy}\left(\frac{\partial u}{\partial y}+\frac{\partial v}{\partial x}\right)\right]dx\,dy-$$
$$\int_0^b\int_0^a u\left(\frac{\partial N_x}{\partial x}+\frac{\partial N_{xy}}{\partial y}\right)dx\,dy-$$
$$\int_0^b\int_0^a v\left(\frac{\partial N_{xy}}{\partial x}+\frac{\partial N_y}{\partial y}\right)dx\,dy \tag{D3}$$

In the development of the differential equations and in this section the middle-surface stresses N_x, N_y, and N_{xy} are assumed to remain unchanged in the course of the plate's deflection. Equations (10) for equilibrium of horizontal force, consequently, remain satisfied at all times, and, therefore, the last two integrals of expression (D3) vanish. Furthermore, the assumption that the middle-surface stresses remain unchanged implies that no stretching of the middle surface during deflection occurs. In order to prevent such stretching the horizontal displacements u and v can be shown (p. 313, reference 5) to be related to the vertical displacements w as follows:

$$\frac{\partial u}{\partial x}=-\frac{1}{2}\left(\frac{\partial w}{\partial x}\right)^2$$

$$\frac{\partial v}{\partial y}=-\frac{1}{2}\left(\frac{\partial w}{\partial y}\right)^2$$

$$\frac{\partial u}{\partial y}+\frac{\partial v}{\partial x}=-\frac{\partial w}{\partial x}\frac{\partial w}{\partial y}$$

The first and only remaining integral of expression (D3) therefore becomes

$$\frac{1}{2}\int_0^b\int_0^a\left[N_x\left(\frac{\partial w}{\partial x}\right)^2+N_y\left(\frac{\partial w}{\partial y}\right)^2+2N_{xy}\frac{\partial w}{\partial x}\frac{\partial w}{\partial y}\right]dx\,dy \quad \text{(D4)}$$

Addition of expressions (D1) and (D4) gives, as the total potential energy of the external forces,

$$V_2=\frac{1}{2}\int\int\left[-2qw+N_x\left(\frac{\partial w}{\partial x}\right)^2+N_y\left(\frac{\partial w}{\partial y}\right)^2+2N_{xy}\frac{\partial w}{\partial x}\frac{\partial w}{\partial y}\right]dx\,dy \quad \text{(D5)}$$

Although the derivation was carried out for the special case of a rectangular plate, equation (D5) also applies to a plate of any shape in which the middle-surface stresses remain unchanged during deflection. Equation (D5) is identical with equation (27).

REFERENCES

1. Reissner, Eric: The Effect of Transverse Shear Deformation on the Bending of Elastic Plates. Jour. Appl. Mech., vol. 12, no. 2, June 1945, pp. A-69—A-77.
2. March, H. W.: Buckling of Flat Plywood Plates in Compression, Shear, or Combined Compression and Shear. Mimeo. No. 1316, Forest Products Lab., U. S. Dept. Agric., April 1942.
3. March, H. W., and Smith, C. B.: Buckling Loads of Flat Sandwich Panels in Compression. Various Types of Edge Conditions. Mimeo. No. 1525, Forest Products Lab., U. S. Dept. Agric., March 1945.
4. Timoshenko, S.: Theory of Plates and Shells. McGraw-Hill Book Co., Inc., 1940, pp. 188–194.
5. Timoshenko, S.: Theory of Elastic Stability. McGraw-Hill Book Co., Inc., 1936.
6. Reissner, Eric: On Bending of Elastic Plates. Quarterly Appl. Math., vol. V, no. 1, April 1947, pp. 55–68.
7. March, H. W.: Buckling Loads of Panels Having Light Cores and Dense Faces. Mimeo. No. 1504, Forest Products Lab., U.S. Dept. Agric., Feb. 1944.
8. Timoshenko, S.: Strength of Materials. Part I—Elementary Theory and Problems. Second ed., D. Van Nostrand Co., Inc., 1940.
9. Filon, L. N. G.: On an Approximate Solution for the Bending of a Beam of Rectangular Cross-Section under Any System of Load, with Special Reference to Points of Concentrated or Discontinuous Loading. Phil. Trans. Roy. Soc. (London), ser. A, vol. 201, Aug. 1903, pp. 82–84.
10. Love, A. E. H.: A Treatise on the Mathematical Theory of Elasticity. Fourth ed., Dover Publications, 1944, pp. 173–174.
11. Woods, Frederick S.: Advanced Calculus. Ginn and Co., 1934, pp. 317–331.