REPORT No. 913

EXPERIMENTS ON STABILITY OF BUNSEN-BURNER FLAMES FOR TURBULENT FLOW

By Lowell M. Bollinger and David T. Williams

SUMMARY

The results of a study of the stability of propane-air flames on Bunsen-burner tubes are presented. Fuel-air ratio, tube diameter, and Reynolds number were the primary variables. Regions of stability are outlined in plots of fuel-air ratio as a function of Reynolds number for flames seated on the burner lip and for flames suspended well above the burner.

For fully developed flow, turbulent as well as laminar, the velocity gradient at the burner wall is a satisfactory variable for correlating the fuel-air ratio required for blow-off of seated flames for fuel-air ratios of less than 15 percent. For turbulent flames, wall velocity serves as a correlating variable in the same fuel-air-ratio range.

INTRODUCTION

The stability of burner flames has been studied by Lewis and von Elbe (reference 1), and von Elbe and Mentser (reference 2). In reference 1, the fuel-air ratio at which a laminar Bunsen flame blew off the burner lip was determined by the velocity gradient at the burner tube wall, independent of tube diameter.

As part of a program of fundamental combustion research at the NACA Cleveland laboratory, an investigation of the factors affecting flame speed and stability was undertaken during 1945–46. A preliminary study of the effect of turbulence on combustion is reported. The investigation consisted of the study of the stability of Bunsen-type flames, seated on the burner lip and suspended above the burner, burning in turbulent flow. The variables chosen for the study were the fuel-air ratio (by volume) and the mixture flow at which the flame would blow out or leave the burner lip. These variables were applied to burner tubes of various diameters. These experiments provide an extension of part of the measurements of references 1 and 2 into the region of turbulent flow. An expression for wall velocity gradient obtained from reference 3 was used for this extension.

APPARATUS AND PROCEDURE

The arrangement of the apparatus is shown in figure 1. The fuel used was commercial gaseous propane. An analysis of a sample showed at least 98-percent-saturated hydrocarbon content. The oxidant was air with a relative humidity of approximately 15 percent. The capillary flowmeters F, for measuring the propane and air flows, were calibrated with a wet displacement meter. For large air flows, a 0.199-inch thin-plate orifice was used. The orifice flow coefficient was corrected to make the readings consistent with those of the air capillaries.

The Bunsen burners were a series of six smooth seamless steel tubes, which were long enough to form fully developed pipe flow at the outlet. The dimensions were as follows:

Nominal diameter (in.)	Inside diameter, d (cm)	Length, L (cm)	Length-diameter ratio, L/d
3/16	0.469	110	235
1/4	.626	125	200
3/8	.943	215	228
5/8	1.579	215	136
7/8	2.220	220	99
1 1/8	2.843	215	76

A collar was so attached to the burner lip that the flame issued, in effect, from a hole in a plate of about 3-inch diameter. The tubes were cooled at the outlet by use of a water jacket that was maintained at the inlet-air temperature. A short sheet-steel column 12 inches square was put around the flame to shield it from drafts. A glass window in one side of this column permitted direct observation of the flame.

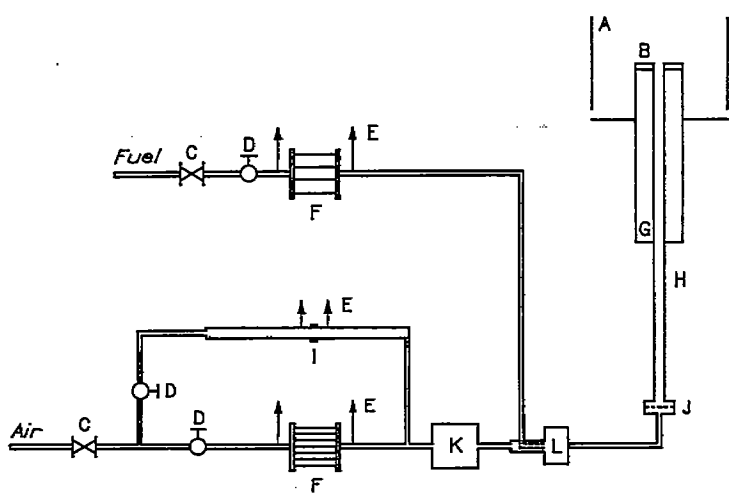

A, flame shield
B, burner-lip extension
C, pressure regulators
D, control valves
E, manometer leads
F, capillary flowmeters
G, water jacket
H, burner tube
I, thin-plate orifice flowmeter
J, flame check
K, surge tank
L, fuel-air mixing chamber

Figure 1.—Diagram of experimental apparatus.

For each burner size, the fuel and air flows were set at values for which the desired type of stable flame could be obtained. The air flow was then slowly changed until the flame was no longer able to burn in the position under investigation. At this point the manometer readings indicating the fuel and air flows were recorded. All data were taken at sea-level pressure and room temperatures varying from 25° to 33° C.

QUALITATIVE CONSIDERATIONS OF FLAME STABILITY

Definitions.—Two types of flame were obtained with the Bunsen burner. One was the usual Bunsen flame seated on the burner lip; the other was a flame suspended a number of tube diameters above the burner. Photographs illustrating the two types of flame are shown in figure 2.

Definite flow conditions and fuel-air ratios exist for which a Bunsen flame can burn seated on a burner lip. If the flow or fuel-air ratio is sufficiently changed, the flame either blows off the burner lip or flashes back into the burner tube. In blowing off, the flame may either completely blow out or rise to the position of the suspended flame and continue to burn. Similarly, a sufficient change in flow conditions causes a suspended flame either to blow out completely or jump back to the burner lip. The terms "blow-off, flash-back, blow-out, and jump-back" will be used herein as just defined.

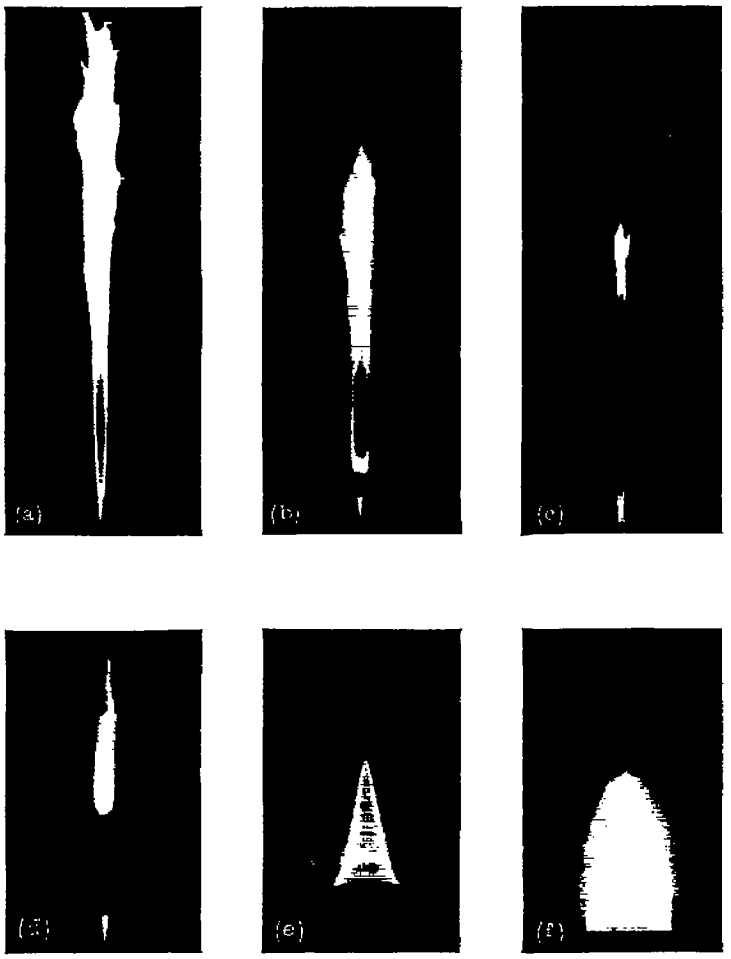

(a) Seated flame; turbulent flow; Reynolds number, 3770; fuel-air ratio, 0.183.
(b) Suspended flame; turbulent flow; Reynolds number, 3770; fuel-air ratio, 0.183.
(c) Seated flame; laminar flow; Reynolds number, 1900; fuel-air ratio, 0.135.
(d) Suspended flame; laminar flow; Reynolds number, 1900; fuel-air ratio, 0.135.
(e) Seated flame; laminar flow; Reynolds number, 1900; fuel-air ratio, stoichiometric.
(f) Seated flame; turbulent flow; Reynolds number, 3770; fuel-air ratio, stoichiometric.

FIGURE 2.—Representative propane-air flames obtained with Bunsen burner of ¼-inch diameter.

Stability consideration.—A jet of fuel-air mixture may be considered to be separated from the region of stationary pure air by a mixing region. Within the mixing region, the gas velocity continuously varies between that in the interior of the jet and the zero velocity of the air outside.

In a similar manner, the composition of the gas in the mixing region varies between the composition of the jet and that of the outside air. A flame speed will correspond to the fuel-air ratio at each point in the mixing region.

The base of a seated propane-air flame, from which the flame spreads to the rest of the flame front, has been observed to be about 1 millimeter above the burner lip and a small distance outside the burner radius; hence, the base may be considered to be within a mixing region. If the local flame speed at any point in the mixing region is greater than the local velocity, the flame tends to flash back to the burner lip and the tube. As the flame base approaches the lip, the effective flame speed at the base decreases because of the cooling and reaction quenching effects of the burner walls and the flame may be prevented from flashing back (reference 1).

A flame burning in a stable manner on a burner lip is first considered. If flow velocity in the jet is then increased without change in fuel-air ratio, all the local gas speeds in the mixing region will likewise be increased until, when in every region the local flow velocity is greater than the local flame speed, the flame will blow off. If the fuel-air ratio in the jet is then increased without change of jet speed, the fuel-air ratio will increase throughout the mixing region. The strata nearest the stagnant air, in particular, will be enriched until the local flame speed is as great as the relatively low local gas speeds. At that point, the flame can again be stable on the burner. This rough analysis predicts that the blow-off speed will increase when the fuel-air ratio in the jet increases.

The blow-off of suspended flames is governed in a similar manner. The base of the suspended flame is in a portion of the mixing region where the local flame speed is as great as the local jet velocity. An increase in fuel-air ratio in the jet causes an increase in fuel-air ratio throughout the mixing region and a corresponding increase in jet velocity is necessary to blow out the flame. Here again, the blow-off speed will increase with increasing jet fuel-air ratio.

Flames may burn suspended on laminar or turbulent jets. The mixing characteristics of these jets govern the position above a burner at which a flame remains stable. The turbulent jet mixes rapidly with the outside air and produces

a position for stable burning varying from about 1 to 10 tube diameters above the burner. The position depends upon fuel-air ratio and flow conditions. In general, this position moves upward as flow conditions are changed from jump-back toward blow-out. Mixing in the laminar jet is slow, however, and only becomes rapid a certain distance above the burner where the jet breaks down into turbulence. A flame can remain stable on the laminar jet only above this point. Ignition trials indicated that, at a position along the outside of the laminar part of the jet, the velocity and the fuel-air ratio are conducive to burning. The surrounding velocity and fuel-air-ratio fields are so constructed, however, that the flame is unstable at this position and will either jump back to the burner lip or move up to the turbulent part of the jet. The position of stable burning on a laminar jet can therefore vary only between the point where the jet becomes turbulent and several diameters above this point. In the cases investigated, the suspended flame on the laminar jet was always higher than the flame on the turbulent jet. Figures 2 (b) and 2 (d) illustrate this observation.

EXPERIMENTAL RESULTS

A comprehensive view of the regions of stability of the Bunsen-burner flame as observed in these experiments is provided in figure 3 for tubes of ⅝- and ¼-inch diameters. The data are plotted in terms of fuel-air ratio in the total mixture by volume against Reynolds number

$$R=\frac{\rho d U}{\mu}$$

where

- d burner diameter
- R Reynolds number
- U average velocity
- μ viscosity
- ρ mixture density

Any consistent set of units may be used. For the computation of Reynolds number R and other variables, viscosity μ was assumed to vary linearly with fuel-air ratio. With the ⅝-inch tube of figure 3 (a), in the region marked A, the flame does not burn steadily at the burner mouth but flashes back into the burner. This region lies near the stoichiometric fuel-air ratio (4.02 percent) and reaches a maximum value of Reynolds number at mixtures a little richer than stoichiometric. Curve B is the blow-off curve, that is, the boundary between the region where burning is stable at the burner mouth and the region where the flame blows off; the blow-off region is to the right of curve B. Curves similar to these are presented in references 1 and 2 for laminar flows.

Within the region between the curves C and C′, a flame can burn stably in the suspended position. No suspended flame could be obtained on the laminar jet for this tube. The curves C and C′ were determined by obtaining a stable suspended flame and then changing the air flow until the flame either blew out or jumped back to the lip of the burner.

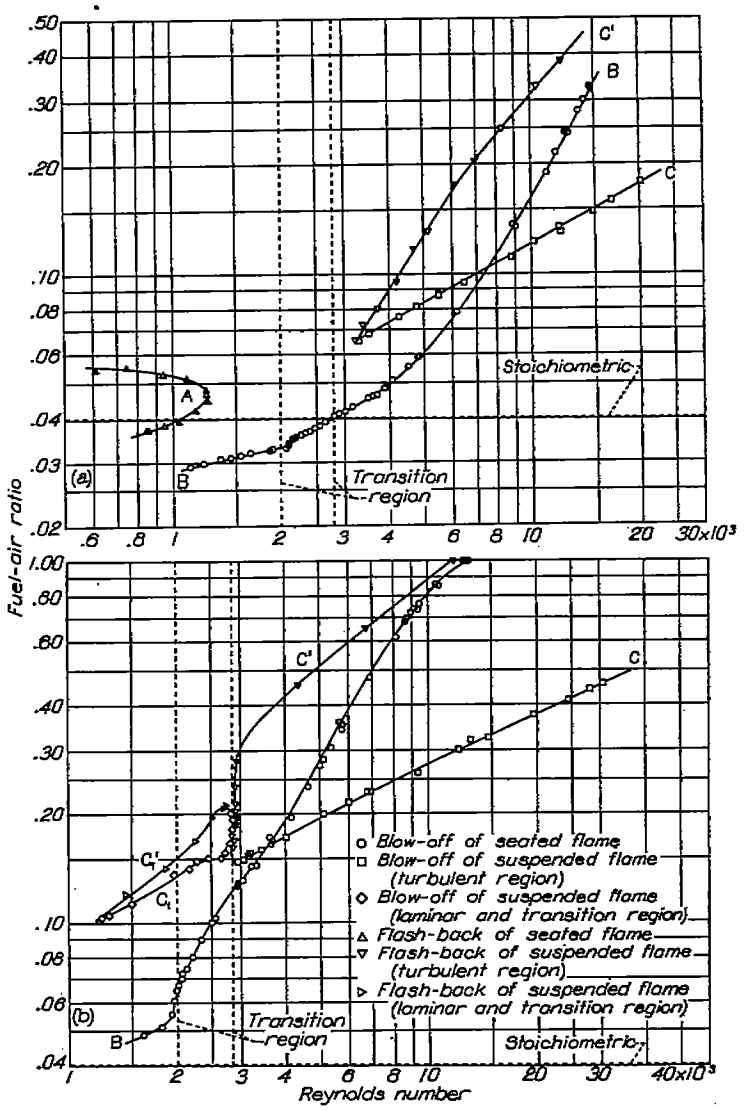

(a) ⅝-inch burner.
(b) ¼-inch burner.

FIGURE 3.—Regions of stable burning for propane-air flames.

Thus, below C the flame will blow out and above C′ it will jump back. It is interesting to observe that above a Reynolds number of 7600 the flame will be stable above the burner when the fuel percentage is too lean to burn at the lip. Between Reynolds numbers of 3000 and 7600, the reverse is true and the flame is stable at the lip when the mixture is too lean to burn above the tube. In the region above curve B also lying between C and C′, the flame is stable either at the lip or above the tube, depending upon the point at which it is ignited.

Corresponding curves for the tube of ¼-inch diameter are shown in figure 3 (b). The flash-back curve such as encloses region A of figure 3 (a) could not be obtained with this burner because the fuel flow required was below the limit of the flowmeter. For this tube, suspended flames were obtained for laminar and transition, as well as turbulent, flows. In the data obtained, two regions appear to coincide at a Reynolds number of about 2800; that is, by increasing the Reynolds number at a fuel concentration of 18 percent,

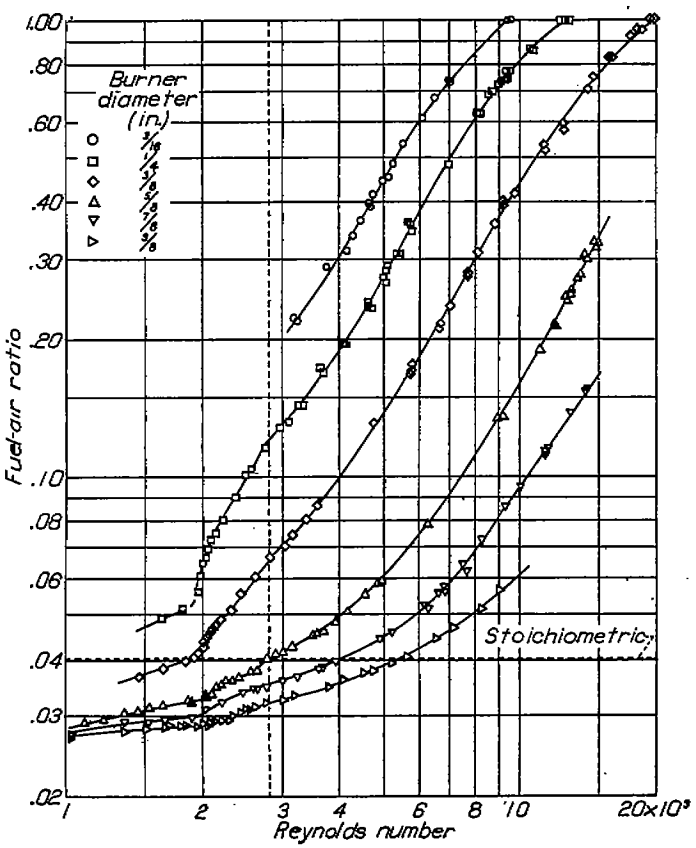

FIGURE 4.—Variation of fuel-air ratio with Reynolds number of flow in tube for blow-off of seated propane-air flames.

the flame would pass from one region into the other. The flame cannot make this transition, however, because its position of stable burning for this tube is much higher in the region C_1–C_1' than in C–C′.

No quantitative analysis of the suspended flame has been made. It may be significant, however, that when the blow-out points of the turbulent suspended flame are plotted on logarithmic paper they form a straight line. The slopes of the three blow-out lines obtained are all approximately ½, the slopes being 0.491, 0.475, and 0.541 for the 3/16-, ¼-, and ⅝-inch tubes, respectively. Two of these blow-out lines are given in figure 3.

A plot of fuel-air ratio for blow-off of the seated flame against Reynolds number for six burner tubes of different sizes is presented in figure 4. No data were obtained for laminar flows for the 3/16-inch burner. The lower limit to the data obtained was imposed by the lower limit of the fuel flowmeter and the upper limit by the upper limit of either the air or fuel flowmeter. The data were very reproducible for low fuel-air ratios but were somewhat scattered for more than about 20-percent fuel. Qualitative tests showed that for high fuel concentrations blow-off depended rather critically on the form of the burner lip.

In the transition region previously mentioned (Reynolds numbers from approximately 2000 to 2800) between laminar and turbulent flow (reference 4), the appearance of the flame indicated that the flow conditions were characteristic of neither region. At the lower limit of the transition zone, the flame was largely laminar in character, but occasionally became momentarily turbulent. The difference between laminar and turbulent flames is illustrated in figure 2. As the Reynolds number was increased, the frequency of the turbulent flickers increased until at the upper limit of the transition zone the flame was turbulent most of the time and only an occasional laminar flicker indicated that the flow was not fully turbulent. At the lower limit of the transition zone, the curves have a sudden change in slope because a large increase in fuel-air ratio is necessary to enable the flame to remain seated during a turbulent flicker. The change in slope is less abrupt at the upper limit of the transition zone.

Data in reference 1 indicate that the fuel percentage corresponding to blow-off of a laminar flame is related to the velocity gradient at the tube wall, independent of tube diameter. An objective of this investigation was to find whether a similar type of correlation exists for turbulent flows.

For the case of laminar flow, as outlined in reference 1, the velocity gradient at the tube wall is

$$\left(\frac{du}{dy}\right)_w=\frac{8U}{d} \tag{1}$$

where

u local velocity
y normal distance from tube wall

According to the usual picture of turbulent flow in pipes, the central body of turbulent flow is surrounded by a thin laminar film at the wall. This wall velocity gradient is given by

$$\left(\frac{du}{dy}\right)_w=\frac{u_w}{\delta} \tag{2}$$

where

u_w velocity at inner boundary of laminar film
δ thickness of laminar film

From the mathematical development in reference 3 (pp. 46 and 85), it can be readily deduced that

$$\left(\frac{du}{dy}\right)_w=\frac{U^2\lambda}{8\nu}=\frac{u_w^2}{N^2\nu} \tag{3}$$

where

N constant (value of 10 from reference 3, p. 85)
λ pipe friction coefficient
ν kinematic viscosity of gas in tube

On the basis of equation (3), $\left(\frac{du}{dy}\right)_w$ and u_w appear to be equally suitable alternative variables for use in plotting the variation of fuel-air ratio for blow-off of turbulent flames because ν is dependent only on fuel-air ratio. Because the main body of turbulence is surrounded by a laminar layer, the mixing characteristics of laminar and turbulent flames are the same in the mixing region just above the burner lip. If this similarity is the case, because velocity gradient at the wall serves as a correlating variable for blow-off of laminar flames, it should also correlate the blow-off of turbulent flames.

Data of the blow-off of both laminar and turbulent flames, previously presented in figure 4, have been plotted in figure 5

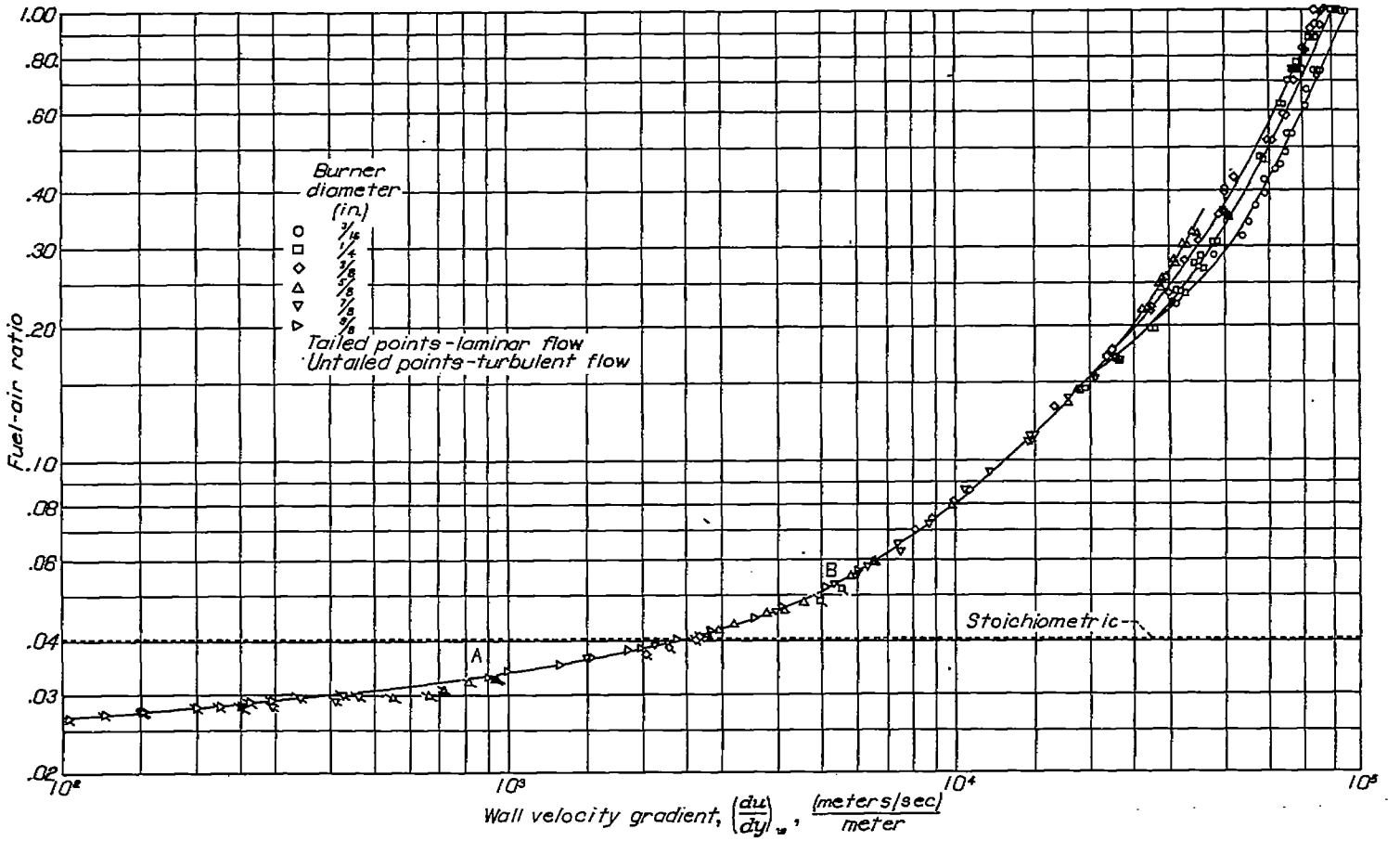

FIGURE 5.—Variation of fuel-air ratio with velocity gradient at tube wall for blow-off of seated propane-air flames.

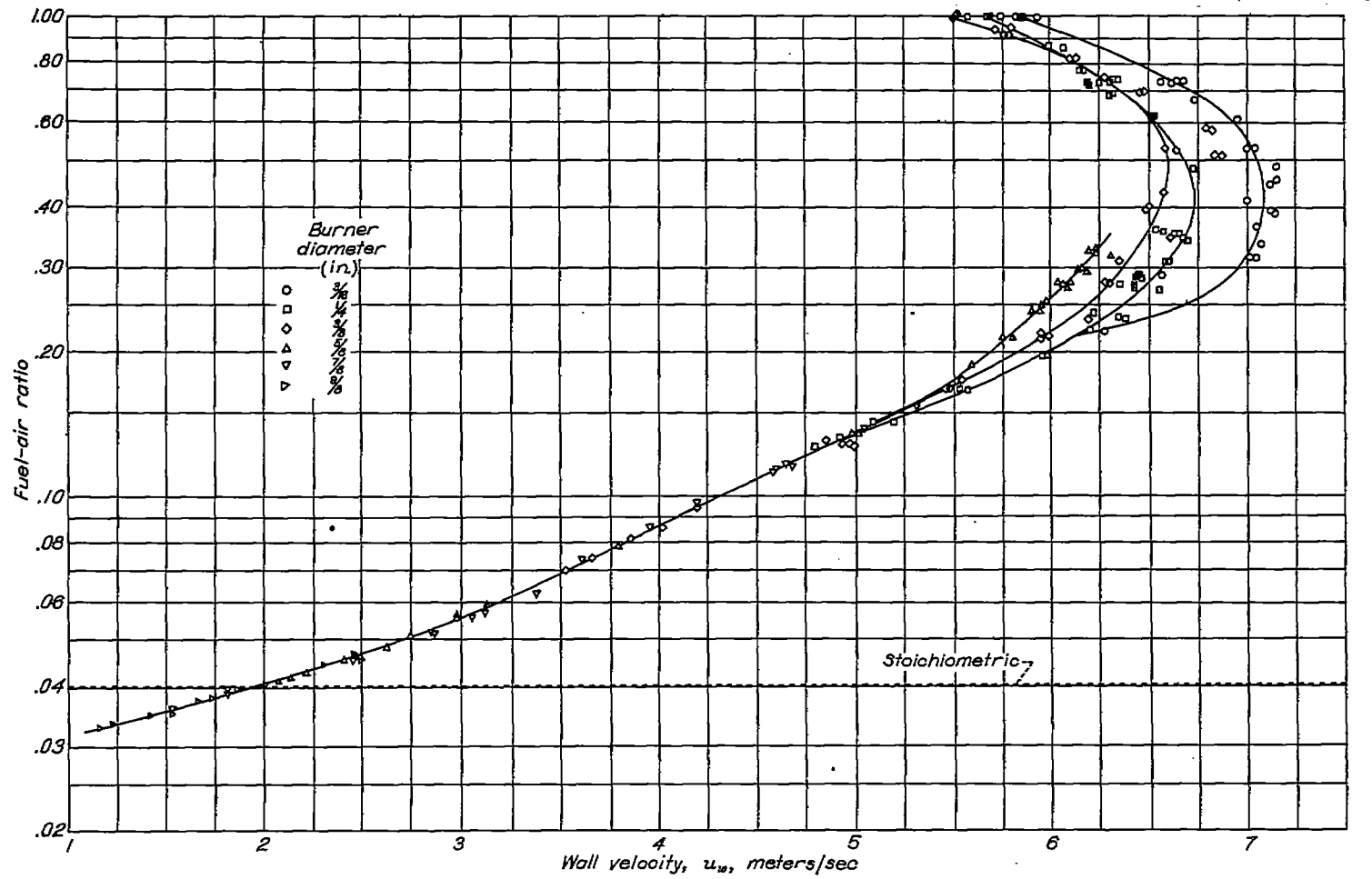

FIGURE 6.—Variation of fuel-air ratio with wall velocity for blow-off of turbulent seated propane-air flames.

as fuel-air ratio against velocity gradient at the wall $\left(\frac{du}{dy}\right)_w$. For laminar flow, $\left(\frac{du}{dy}\right)_w$ was computed from equation (1) and for turbulent flow, from equation (3). No transition flow data are plotted in figure 5 because the velocity gradient is undefinable for such flow. The turbulent data correlate well up to a fuel-air ratio of about 15 percent. Above this fuel-air ratio, the curves for the smaller tubes deviate toward higher velocity gradients. Moreover, the laminar data overlap the turbulent data well, the extent of overlap being from A to B in figure 5. Because the laminar data obtained do not extend above a fuel-air ratio of 6 percent, the capacity of the wall velocity gradient to correlate blow-off for concentrations above 6 percent and for laminar flow has not been determined.

The variation of fuel-air ratio for blow-off with wall velocity u_w is shown in figure 6. The velocity u_w was computed from the average gas speed U by use of equation (3) rewritten as

$$u_w = NU\sqrt{\lambda/8}$$

and with the Blasius equation for λ (reference 3, p. 31)

$$\lambda = 0.316\left(\frac{1}{R}\right)^{0.25}$$

The variable wall velocity has no meaning for laminar flow; hence it can be used only for blow-off of turbulent flames. It is of interest to observe that the blow-off curves have negative slopes at high fuel-air ratios. Plots of fuel-air ratio against average velocity U would also have negative slopes in this region. This difference from figure 5 is caused by the variation of kinematic viscosity with propane concentration.

As a result of the reasoning and the data, the velocity gradient at the tube wall is considered to be a more useful and perhaps a more significant variable than wall velocity for correlating the fuel-air ratio for the blow-off of Bunsen-burner flames.

CONCLUSIONS

At sea-level pressure and room temperatures and for tubes of 3/16- to 5/8-inch diameter, the following conclusions may be made concerning the blow-off of propane-air Bunsen-burner flames:

1. The wall velocity gradient is successful in correlating the fuel-air ratio for blow-off for fully developed pipe flows, laminar and turbulent, to fuel-air ratios of 15 percent.
2. For turbulent flows, wall velocity will also correlate fuel-air ratio to blow-off for fuel-air ratios up to 15 percent.

FLIGHT PROPULSION RESEARCH LABORATORY,
NATIONAL ADVISORY COMMITTEE FOR AERONAUTICS,
CLEVELAND, OHIO, *March 21, 1947.*

REFERENCES

1. Lewis, Bernard, and von Elbe, Guenther: Stability and Structure of Burner Flames. Jour. Chem. Phys., vol. 11, no. 2, Feb. 1943, pp. 75–97.
2. von Elbe, Guenther, and Mentser, Morris: Further Studies of the Structure and Stability of Burner Flames. Jour. Chem. Phys., vol. 13, no. 2, Feb. 1945, pp. 89–100.
3. Bakhmeteff, Boris A.: The Mechanics of Turbulent Flow. Princeton Univ. Press (Princeton), 1941.
4. Prandtl, L., and Tietjens, O. G.: Flow in Pipes and Channels. Ch. III of Applied Hydro- and Aeromechanics. McGraw-Hill Book Co., Inc., 1934, pp. 14–57.