RM No. E7J13

30 APR 1948

RESEARCH MEMORANDUM

PERFORMANCE OF EXPERIMENTAL TURBOJET-ENGINE COMBUSTOR

I - PERFORMANCE OF A ONE-EIGHTH SEGMENT OF AN EXPERIMENTAL TURBOJET-ENGINE COMBUSTOR

By Francis U. Hill and Herman Mark

Flight Propulsion Research Laboratory
Cleveland, Ohio

TECHNICAL EDITING WAIVED

NATIONAL ADVISORY COMMITTEE FOR AERONAUTICS

WASHINGTON

April 21, 1948

NACA LIBRARY
LANGLEY MEMORIAL AERONAUTICAL LABORATORY
Langley Field, Va.

NASA Technical Library
3 1176 01425 9791

NATIONAL ADVISORY COMMITTEE FOR AERONAUTICS

RESEARCH MEMORANDUM

PERFORMANCE OF EXPERIMENTAL TURBOJET-ENGINE COMBUSTOR

I - PERFORMANCE OF A ONE-EIGHTH SEGMENT OF AN EXPERIMENTAL TURBOJET-ENGINE COMBUSTOR

By Francis U. Hill and Herman Mark

SUMMARY

A one-eighth segment of an annular combustor suitable for use as a component of an experimental turbojet engine was investigated. The assumption was made from previous unpublished studies that the data obtained from these investigations of a one-eighth segment would enable estimation of the performance of an annular combustor having a similar design. Because of the small space available for the combustor, a special design involving a minimum of obstructions in the combustion chamber was utilized.

The altitude operational limits of the combustor segment were determined and measurements were made of temperature-rise efficiency, total-pressure loss, and exhaust-gas temperature variation for several simulated engine operating conditions.

The results of these investigations indicated the following performance: (1) The combustor segment produced gases of sufficient temperature to enable engine operation for all altitudes up to 45,000 feet over a range of engine rotational speeds from 55 to 100 percent of rated speed (10,000 to 18,000 rpm). (2) The temperature-rise efficiency exceeded 80 percent at all altitudes below 30,000 feet for engine speeds more than 89 percent of rated speed (16,000 rpm). (3) The gas supplied by the combustor segment had a total variation in temperature that was usually less than 600° F over the operating range of engine speeds from 55 to 100 percent of rated speed (10,000 to 18,000 rpm) and from sea level to an altitude of 30,000 feet.

INTRODUCTION

As a part of a general program conducted at the NACA Cleveland laboratory to investigate the performance of turbojet combustors, a one-eighth segment of an annular-combustor housing for an experimental turbojet engine was set up. This housing was used to

investigate various combustor designs in order to develop a suitable design for the experimental turbojet engine. Data obtained from an investigation, conducted concurrently with the investigation reported herein, showed that the performance of a one-sixth segment of an annular turbojet combustor was almost the same as that of the entire combustor. This similarity indicated that the performance of the one-eighth combustor segment would closely approximate the performance of a complete annular combustor having a similar design.

Because of the small space provided for the combustor, special designs involving a minimum of obstruction in the combustion chamber were studied. From 11 separate combustor designs investigated in the one-eighth segment of the engine combustor housing, the design was selected that gave optimum performance during preliminary investigations. The design of this combustor as it was finally evolved and the performance data, including altitude operational limits, temperature-rise efficiencies, total-pressure-loss correlation, and temperature distribution of the outlet gases for the combustor are presented. The conditions of flow for the inlet and the outlet of the combustor were computed from existing data (reference 1, 2, and 3) on the compressor and the turbine for the experimental engine.

APPARATUS

Combustor

A sketch of the combustor segment is shown in figure 1. Air entered through a narrow section, which simulated the compressor outlet, and then passed through a diffusing section of the housing. Downstream of this diffuser, two fuel manifolds were located in the housing so as to divide the air passage into three separate passages. Pivoted to the rear of each of these manifolds was a vane that could be adjusted to control the distribution of the air through each of the three passages. In preliminary investigations on the combustor, the positions of the vanes that gave the minimum temperature variation of the exhaust gases across the combustor-segment outlet were determined. The vanes were then locked into these positions for the investigations reported.

Four fuel atomizing nozzles were located in each manifold to spray downstream. Commercial fuel nozzles of the hollow-cone spray type were used. The nozzles had a rated capacity of 3.0 gallons per hour and a nominal spray angle of 60°. These nozzles were

protected from the radiation of the flames by Inconel flame shields installed flush against the downstream faces of the spray nozzles, as shown in figure 1. Holes 1/8 inch in diameter were drilled in the shields in line with the nozzle orifices to allow passage of the fuel spray.

At the top and the bottom of the downstream end of the manifolds, perforated air baffles were fastened. These baffles were 2 inches long and formed a well-protected region around the nozzles into which only a small portion of the air was allowed to enter through small holes in the baffles. Ignition was obtained with two aircraft spark plugs located 1/2 inch downstream of the nozzle faces in the zone sheltered by the perforated air baffles. A photograph of the combustor segment showing fuel manifolds, nozzles, air baffles, and spark plugs, is presented in figure 2.

Three quartz observation windows were installed in the sides of the housing downstream of the nozzles (fig. 3).

In order to facilitate the many modifications that were made during the development of the combustor design, the cross section of the housing was made rectangular, rather than with the curved surfaces of an actual section of an annulus. The cross-sectional areas of the rectangular housing, however, were made equal to those in the annular housing.

Although a comparison between the dimensions of this combustor and those of an existing annular type indicate that successful design of this combustor is not too difficult to achieve, it should be pointed out that the main design difficulty was one of shape rather than of size. The shape of the combustion-chamber housing was fixed by the previously designed turbine and compressor and the accompanying shafts, bearings, and supports. This fixed shape accounted for the high area ratio of the diffuser at the combustor inlet, which for each of the numerous designs attempted continued to cause most of the total-pressure loss through the combustor.

The fuel used through this complete series of investigations was AN-F-28.

Installation

The installation of the combustor segment is shown in figure 3. The combustor was installed vertically and air flow was downward. Air could be supplied in quantities sufficient for the requirements

of the investigations at pressures up to a maximum of 45 pounds per square inch absolute and the exhaust system was capable of removing exhaust gas from the combustor segment at pressures as low as 2.0 pounds per square inch absolute. Air flow through the combustor segment and inlet-air pressure to the combustor segment were regulated by two remote-controlled valves: the first, a butterfly valve upstream of the setup and the second, a sliding throttle plate covering a 4-inch opening downstream of the setup. When necessary, the inlet air was preheated by electrical heaters in a bypass upstream of the combustor, which were capable of raising the temperature of the inlet air to the combustor segment to 1000° F.

Operating conditions at high altitudes and low engine speeds requiring inlet-air temperatures considerably lower than room temperature could not be simulated because at these conditions the air-flow requirements were so small that the low temperature of the refrigerated air could not be maintained and the air entered the setup approximately at room temperature.

Instrumentation

The location of the instrumentation in the setup is shown in figure 4(a). A static-pressure tap was located in the 8-inch pipe, which brings air from the air-supply system, 4 inches upstream of the transition from the 8-inch pipe to the simulated compressor outlet. This tap was assumed to measure the inlet-total pressure because the velocity in this section of the pipe was very low. Static pressures were measured by taps in the walls of the duct.

Air flow was measured by a thin-plate orifice having flange taps installed according to A.S.M.E. specifications. Four calibrated rotameters covering the entire range of fuel flows were used.

Inlet-air temperatures at section 1 (fig. 4(a)) were measured by three iron-constantan thermocouples located at the centers of equal areas across the inlet duct. Static pressure was measured at this section by two static taps, one on each side of the duct.

At the combustor outlet, section 2, 30 chromel-alumel thermocouples were arranged in five rakes, each rake containing six evenly spaced thermocouples. The rakes were evenly spaced across the outlet duct. Two more thermocouple rakes evenly spaced across the duct with three total-pressure rakes were located downstream at

section 3, as shown in figure 4(a). These thermocouples were used to detect any change in temperature of the gases after leaving the combustor-segment outlet. The individual tubes in the total-pressure rakes were evenly spaced along the rakes similar to the spacing of the thermocouples along the thermocouple rakes. Detailed sketches of the outlet total-pressure rakes and of the outlet thermocouple rakes are shown in figure 4(b).

All static and total pressures were indicated on an 84-inch manometer board, which was photographed in order to obtain instantaneous readings. Thermocouple readings for inlet and outlet gas temperatures were indicated by calibrated potentiometers.

PROCEDURE

Inlet Conditions

Engine rotational speed and altitude determine the combustor inlet-air conditions and the required combustor-outlet temperature. From investigations that have been conducted on the compressor and the turbine of the experimental turbojet engine (references 1, 2, 3, and unpublished data), conditions of total pressure, temperature, air flow, and required compressor-outlet and turbine-inlet temperatures were estimated for various engine rotational speeds and altitudes. The conditions are presented in figure 5. For these estimates, a tail-cone area of 43.3 square inches, a flight speed of 470 miles per hour, and an engine inlet-diffuser efficiency of 100 percent were assumed.

Altitude Operational Limits

The following procedure was used in investigating the altitude operational limits, that is, the simulated altitudes corresponding to the various simulated engine speeds above which the combustor cannot continuously provide the temperature rise required for engine operation, regardless of the fuel-flow rate: At a much higher inlet-air total pressure than the engine produces at a given engine operating condition, air flow and inlet-air temperature were exactly adjusted. The fuel flow was set at a value that would approximately give the required combustor-outlet temperature. The combustor-segment inlet total pressure was then decreased to the estimated value. An attempt was then made to obtain operation of the combustor segment at fuel-air ratios giving gas temperatures at, above, and below the required value.

The performance of the combustor segment was investigated over a wide range of altitudes and engine speeds. At engine speeds less than 12,000 rpm above an altitude of 45,000 feet, very low air flows, low fuel flows, and low inlet-air temperatures were required; the existing setup would not allow close enough control for accurate duplication of these inlet conditions, therefore no investigations were conducted in this range.

Temperature-Rise Efficiency

Temperature-rise efficiency is defined as the percentage ratio of the actual temperature rise through the combustor segment to the maximum theoretically attainable temperature rise at the over-all fuel-air ratio existing in the combustor.

Investigations were conducted to determine the effect of fuel-air ratio on the mean temperature rise through the combustor segment. The inlet-air conditions of pressure, temperature, and velocity were maintained constant, whereas the fuel-air ratio was varied from 0.010 to 0.020 in 10 equal steps with the mean outlet-air temperature observed for each fuel-air ratio. These investigations over a range of fuel-air ratios were made in order to determine the ability of the combustor segment to furnish energy successfully for engine acceleration and to maintain combustion during engine deceleration. The required turbine-inlet temperature for engine acceleration is higher than that required for maintaining constant engine operation and, correspondingly, the required turbine-inlet temperature for deceleration is lower than that required for maintaining constant engine speeds. The conditions of inlet air chosen simulated an engine speed of 16,000 rpm (89 percent of rated speed) at altitudes of 10,000, 20,000, 33,000, and 40,000 feet.

In addition, for the purpose of obtaining an approximation of the temperature-rise efficiencies for simulated engine operation, temperature-rise efficiencies were determined for the following simulated steady-state conditions of engine operation:

Engine speed (rpm)	Altitude (ft)				
10,000	20,000	25,000	30,000	35,000	
13,000	20,000	25,000	30,000	35,000	40,000
18,000	20,000	30,000	40,000		

At each of these simulated conditions, investigations on the combustor segment were conducted at fuel-air ratios furnishing mean outlet-air temperatures below, approximately at, and above the required turbine-inlet temperature. Data for these three temperatures were plotted against temperature-rise efficiency; the value of temperature-rise efficiency for each operating condition was chosen from this plot at the exact temperature required for non-accelerating operation of the engine.

Total-Pressure Loss

In determining the effect of fuel-air ratio on temperature rise through the combustor segment, all the pressure measurements necessary for the calculation of total-pressure loss through the combustor were made. In order to express the total-pressure loss in a way that would facilitate comparison of the one-eighth combustor segment with any other combustor, the inlet kinetic pressure was calculated and converted to the minimum kinetic pressure that could have existed in the combustor segment, that is, the calculated kinetic pressure at the maximum cross section based on inlet-gas conditions. The total-pressure loss as a ratio of this calculated kinetic pressure was plotted against the inlet-to-outlet gas density ratio. It can be shown from momentum relations that the total-pressure loss due to combustion in a constant-area duct, when expressed as a fraction of the inlet kinetic pressure, is a function of the ratio of inlet-to-outlet gas density.

The total-pressure loss, as a ratio of the kinetic pressure at the combustor maximum cross section, is given by

$$\frac{\Delta p}{q_i}\left(\frac{A_{max}}{A_i}\right)^2$$

where

ΔP total-pressure loss

q_i inlet kinetic pressure

A_{max} combustor maximum cross-sectional area

A_i inlet cross-sectional area

Temperature Distribution

The temperature distributions of the gases at the combustor outlet were obtained from the series of runs conducted to determine the temperature-rise efficiencies. In addition, a series of runs was conducted at a constant fuel-air ratio of 0.015 with inlet-air conditions selected to simulate engine speeds of 10,000, 12,000, 14,000, and 16,000 rpm for a range of altitudes from 10,000 to 40,000 feet.

Average thermocouple indications were taken as true values of temperature and no corrections were made for stagnation or radiation effects.

For the purpose of expressing the variation in temperature of the combustor-segment exhaust gases, a mean-temperature-variation factor was devised.

$$\delta = \frac{\Delta t_1 + \Delta t_2 + \ldots \Delta t_n}{n\,(t_o - t_i)}$$

where

δ mean-temperature-variation factor

Δt absolute difference between exhaust-thermocouple reading and mean exhaust temperature, $^{\circ}F$

n number of exhaust thermocouples

t_o average of outlet thermocouple readings, $^{\circ}F$

t_i average of inlet thermocouple readings, $^{\circ}F$

This factor can be used in showing the effect of several variables on the general exhaust-gas-temperature pattern.

A very small variation of the exhaust-gas temperature would give a small temperature-variation factor and similarly a large variation of exhaust temperature would give a larger temperature-variation factor.

RESULTS AND DISCUSSION

Altitude Operational Limits

The altitude operational limits are shown in figure 6. The curve separates the region in which the temperature rise required for engine operation was attainable from the region in which it was unattainable. The curve shows that over a range of engine speeds from 10,000 to 18,000 rpm (55 to 100 percent of rated engine speed) the combustor segment could successfully furnish gases of sufficient temperature to enable engine operation up to altitudes of at least 45,000 feet. Operation of the combustor with inlet-air conditions simulating altitudes above the operational limits shown in figure 6 was possible for the conditions investigated but the temperature rise obtainable was too low to enable engine operation. At conditions above the altitude operational limit, when the fuel-air ratio was increased in an attempt to give sufficient temperature rise to enable engine operation, combustion became unstable and blow-out occurred. Some instability in the form of flickering and sporadic combustion was also encountered at altitudes below the operational limits but in such cases the combustor segment, nevertheless, continuously provided the required temperature rise for a period of 5 minutes and the simulated flight conditions were therefore considered within the operable range of the engine. At simulated altitudes as much as 10,000 feet below the altitude operational limits, combustion became very smooth and nonflickering when the combustor temperature was near the required value.

Temperature-Rise Efficiencies

The effect of fuel-air ratio on the mean temperature rise through the combustor segment is shown in figure 7. Reference lines of theoretical temperature rise are included for estimating the temperature-rise efficiency at each point. The data indicate that at constant inlet-air conditions, an increase in the fuel-air ratio results in a slight increase in temperature-rise efficiency. From a comparison of the data in figure 7 at a given fuel-air ratio, it is shown that an increase in simulated altitude produces a decrease in temperature-rise efficiency. For the four altitudes chosen for these runs, operation was very stable and no flickering was noticeable throughout the range of fuel-air ratios over which the investigation was conducted. It is apparent from these figures that combustor-outlet temperatures greater than those necessary to maintain constant engine speed may be obtained.

A contour diagram, which gives an approximate indication of the temperature-rise efficiency of the combustor over the range of engine speeds and altitudes investigated, is shown in figure 8. These curves show that any decrease in engine speed, as well as an increase in altitude, decreases the temperature-rise efficiency. This decrease is a result of the accompanying decrease in inlet-air static pressure and temperature, which has been shown to be unfavorable to temperature-rise efficiency (reference 4). The temperature-rise efficiency is more than 80 percent at altitudes below 30,000 feet for engine speeds above 16,000 rpm (89 percent of rated engine speed).

Total-Pressure Loss

A correlation of the corrected total-pressure loss through the combustor segment is shown in figure 9. Included in the total-pressure loss are the small losses in the large nozzle that adapts the 8-inch pipe to the inlet of the combustor segment. Over the range of combustor-inlet and combustor-outlet conditions investigated, the total-pressure loss ΔP was always about equal to or less than the combustor-segment inlet kinetic pressure q_i.

The slope of the correlation curve shown in figure 9 is slightly negative, contrary to what would be expected. Static-pressure checks along the combustor indicated that the velocity through the part of the combustor-segment housing past the fuel manifolds was very high. This high-velocity air when discharged into the low-velocity zone where combustion occurred probably diffused very inefficiently to the lower velocity when no combustion occurred. During combustion, however, the burning gases filled stagnant velocity zones downstream of the atomizing nozzles, and these gases slightly restricted the flow path of the three air streams entering the combustion zone, increasing the efficiency of diffusion. Because the momentum-pressure loss was never more than 4 percent of the entire total-pressure loss, the gain of total pressure from this increase in diffuser efficiency could have exceeded the loss of total pressure due to combustion and this excess could account for the negative slope of the total-pressure-loss correlation.

Temperature Distribution

The gas supplied by the combustor had a total variation in temperature that was usually less than 600° F over the operating

range of engine speeds from 10,000 to 18,000 rpm (55 to 100 percent of rated engine speed) and from sea level to an altitude of 30,000 feet. A typical diagram of the combustor-outlet gas temperature pattern is given in figure 10. This pattern probably could be greatly improved by more closely controlling the construction tolerances of the combustor. The parts within the housing were loosely fitted and any slight misalinement of these parts was enough to cause considerable temperature variation at the combustor outlet.

The effect of inlet-air conditions simulating different altitudes and engine speeds at constant fuel-air ratio on the mean outlet temperature-variation factor δ is shown in figure 11. This factor seems to be unaffected by inlet-air conditions simulating different altitudes at low engine speeds but at inlet-air conditions simulating an engine speed of 16,000 rpm (89 percent of rated engine speed), the factor increases sharply with an increase in simulated altitude. The effect of increasing altitude at an engine speed of 16,000 rpm on the mean temperature-variation factor δ is further illustrated in figure 12 by a plot of mean-temperature-variation factor against fuel-air ratio.

During all the runs, visible flames seldom existed downstream of the combustor segment. At very high outlet-air temperatures that sometimes occurred at low inlet-air pressures, a transparent blue haze existed in the downstream observation window of the combustor segment. At these conditions, however, little temperature rise was observed between the two downstream stations. A plot of the temperatures observed at these two stations is shown in figure 13. This figure shows that the two stations indicated little or no further rise in temperature of the exhaust gases after leaving the combustor-segment outlet.

Ignition

With the ignition system previously described, ignition was affected by three factors: inlet-air total pressure, fuel-air ratio, and inlet-air velocity. Ignition could be obtained at pressures as low as 3 pounds per square inch absolute but only at greatly reduced air flows. At inlet-air static pressures of 1 atmosphere or more, however, ignition appeared to be less dependent on air flow and could be obtained with practically any given inlet conditions of velocity and temperature with which combustion could be maintained. The fuel-air ratio for best ignition appeared to be somewhat greater than that required to

maintain combustion. In all cases, a time interval existed between the time of introduction of the fuel into the combustor segment and the moment of ignition. This lag was very inconsistent but seemed to be shortened by a decrease in inlet-air velocity or an increase in inlet-air static pressure.

SUMMARY OF RESULTS

The results of the investigations conducted on the one-eighth combustor segment designed for an experimental turbojet engine indicate that the combustor segment gave the following performance:

1. The combustor segment furnished gases of sufficient temperature to enable engine operation up to altitudes of at least 45,000 feet over a range of engine speeds of from 55 to 100 percent of rated speed (rated speed, 18,000 rpm).

2. The temperature-rise efficiency was more than 80 percent at altitudes of 30,000 feet or less for engine speeds above 89 percent of maximum rated speed.

3. The gas supplied by the combustor segment had a total variation in temperature that was usually less than 600° F over the operating range of engine speeds from 55 to 100 percent of rated speed and from sea level to an altitude of 30,000 feet.

Flight Propulsion Research Laboratory,
National Advisory Committee for Aeronautics,
Cleveland, Ohio.

REFERENCES

1. Sinnette, J. T., Jr., Schey, Oscar W., and King, J. Austin: Performance of NACA Eight-Stage Axial-Flow Compressor Designed on the Basis of Airfoil Theory. NACA Rep. No. 758, 1944.

2. Goldstein, Arthur W.: Analysis of the Performance of a Jet Engine from Characteristics of the Components. I - Aerodynamic and Matching Characteristics of the Turbine Component Determined with Cold Air. NACA TN No. 1459, 1947.

3. King, J. Austin, and Regan, Owen W.: Performance of NACA Eight-Stage Axial-Flow Compressor at Simulated Altitudes. NACA ACR No. E4L21, 1944.

4. Childs, J. Howard, McCafferty, Richard J., and Surine, Oakley W.: A Study of Combustion Performance in a Westinghouse 19-B Combustor. NACA TN No. 1357, 1947.

841

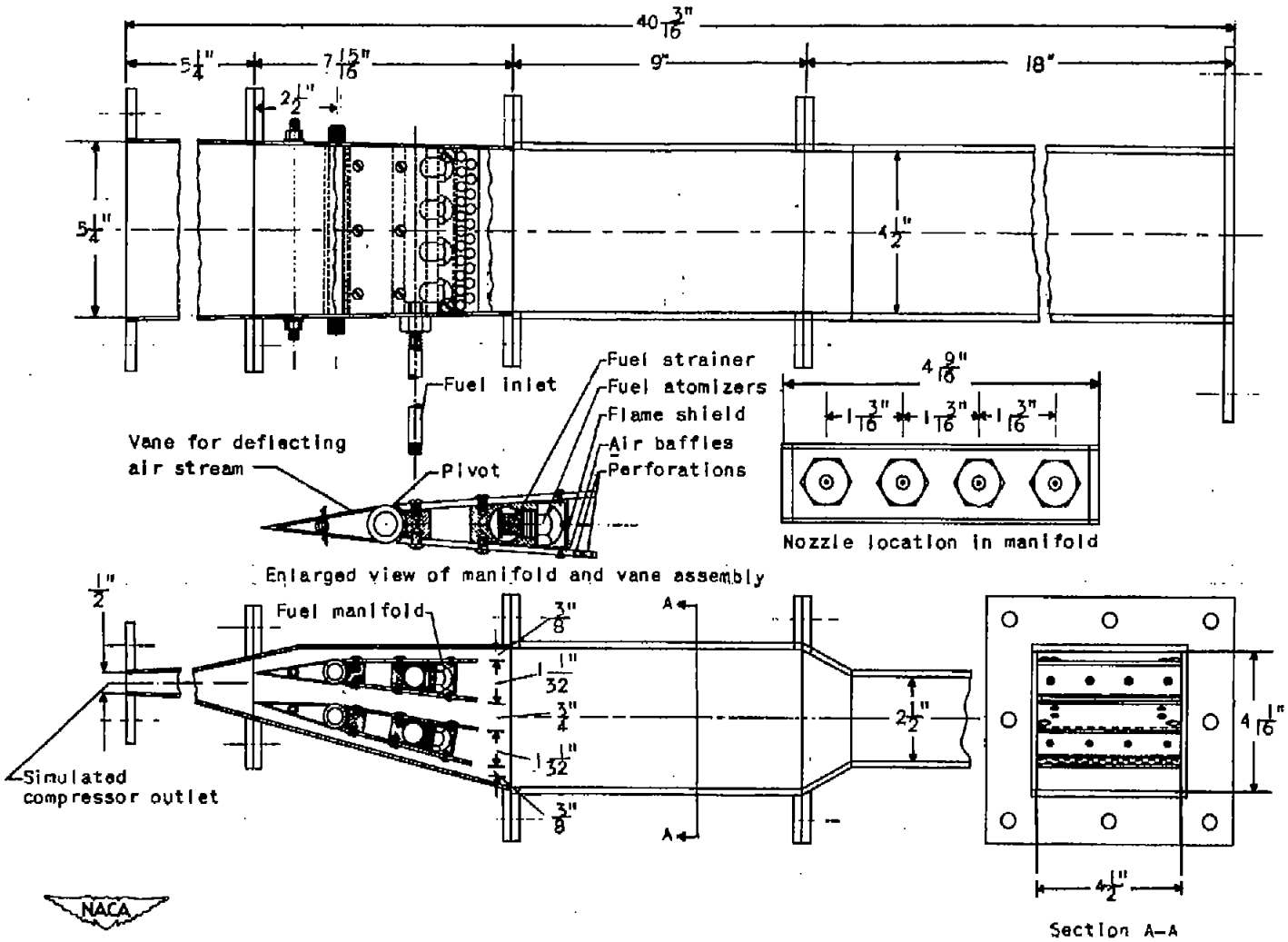

Figure 1. - Diagrammatic sketch of one-eighth segment of proposed turbojet combustor showing air-deflecting vanes, fuel manifolds, fuel atomizers, and housing. Fuel nozzles, fuel manifolds, and ignition plugs as shown in figure 2.

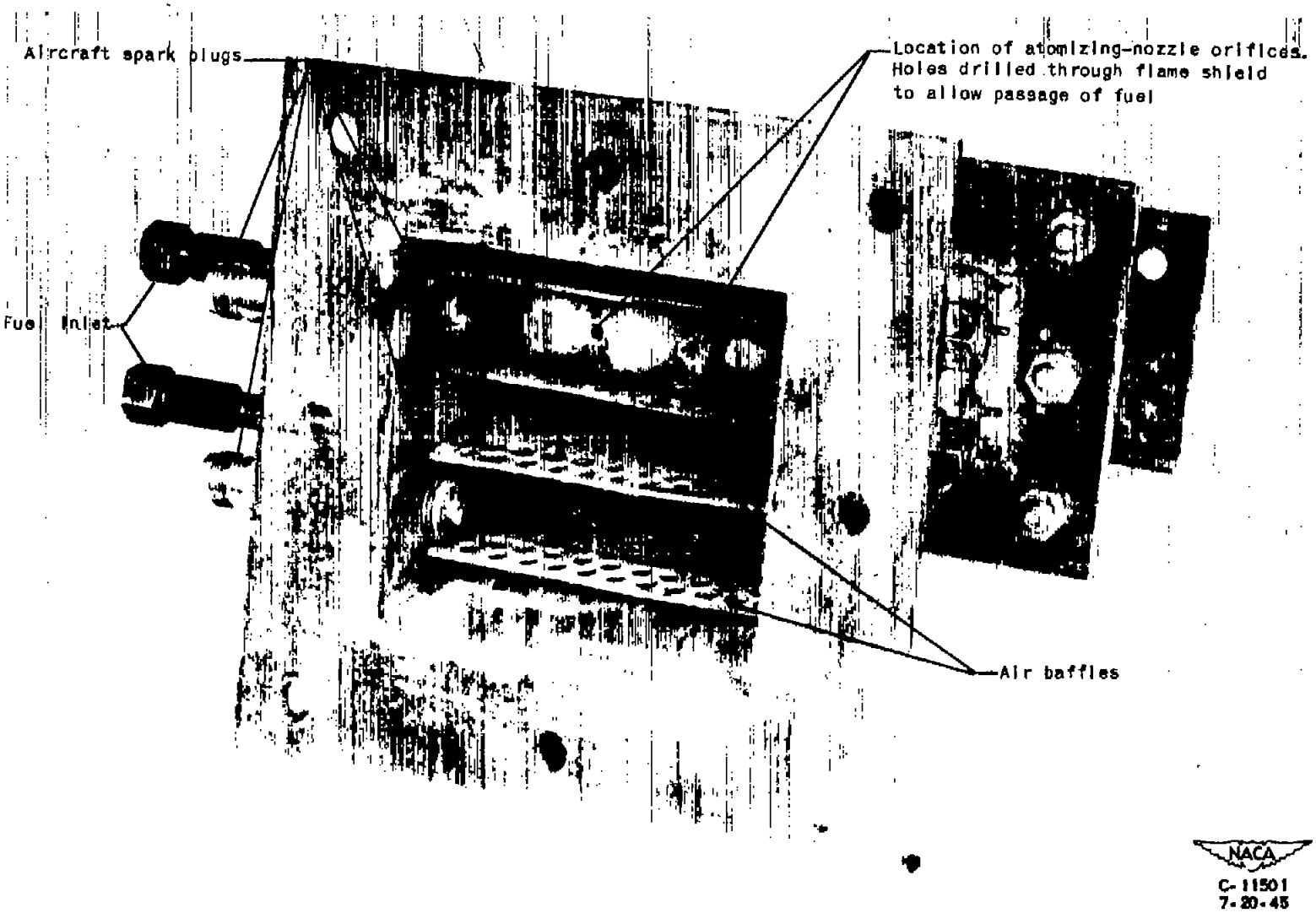

Figure 2. - View of combustor segment showing atomizing nozzles and spark plugs after approximately 200 hours of operation.

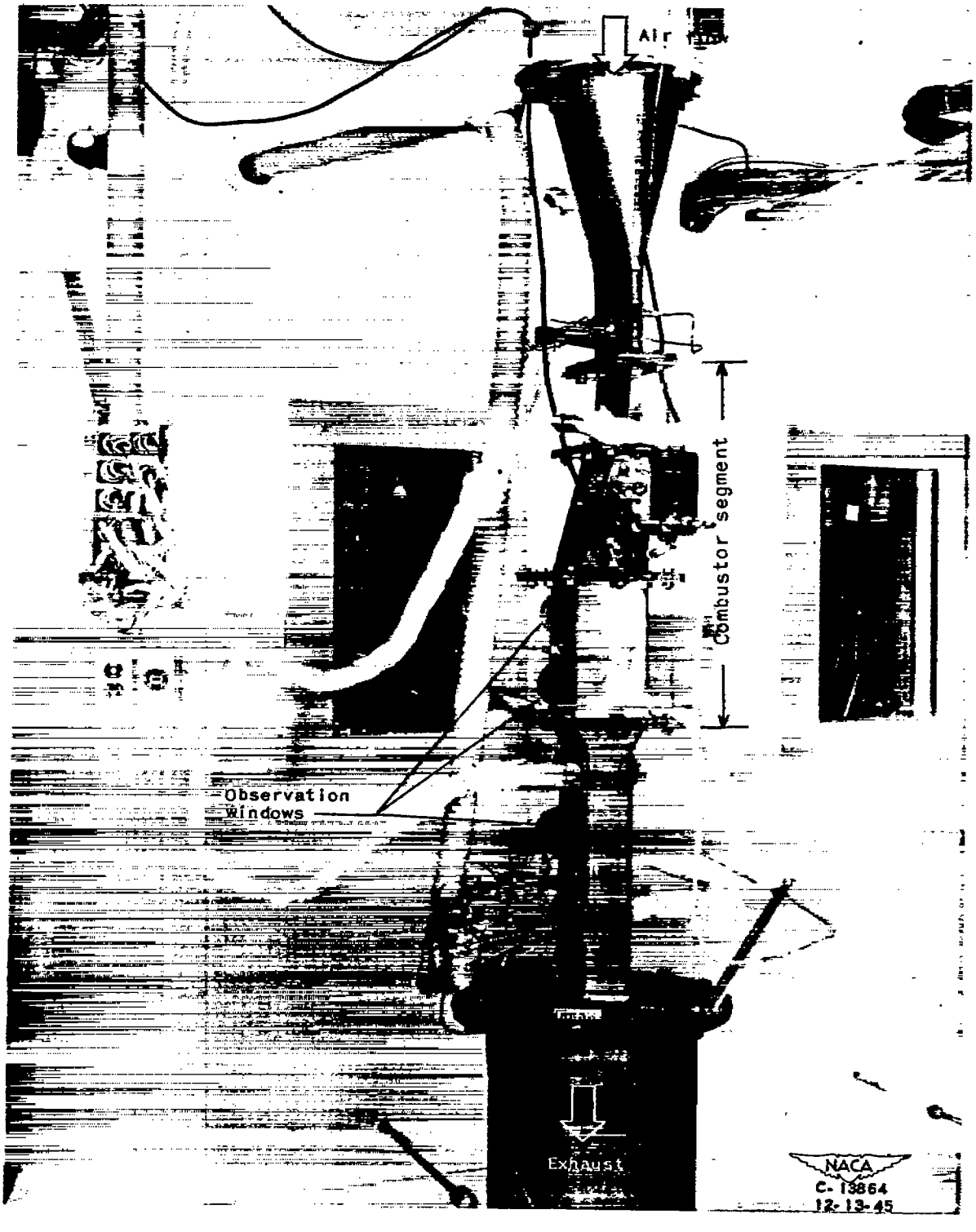

Figure 3. - Installation of one-eighth segment of proposed turbojet combustor.

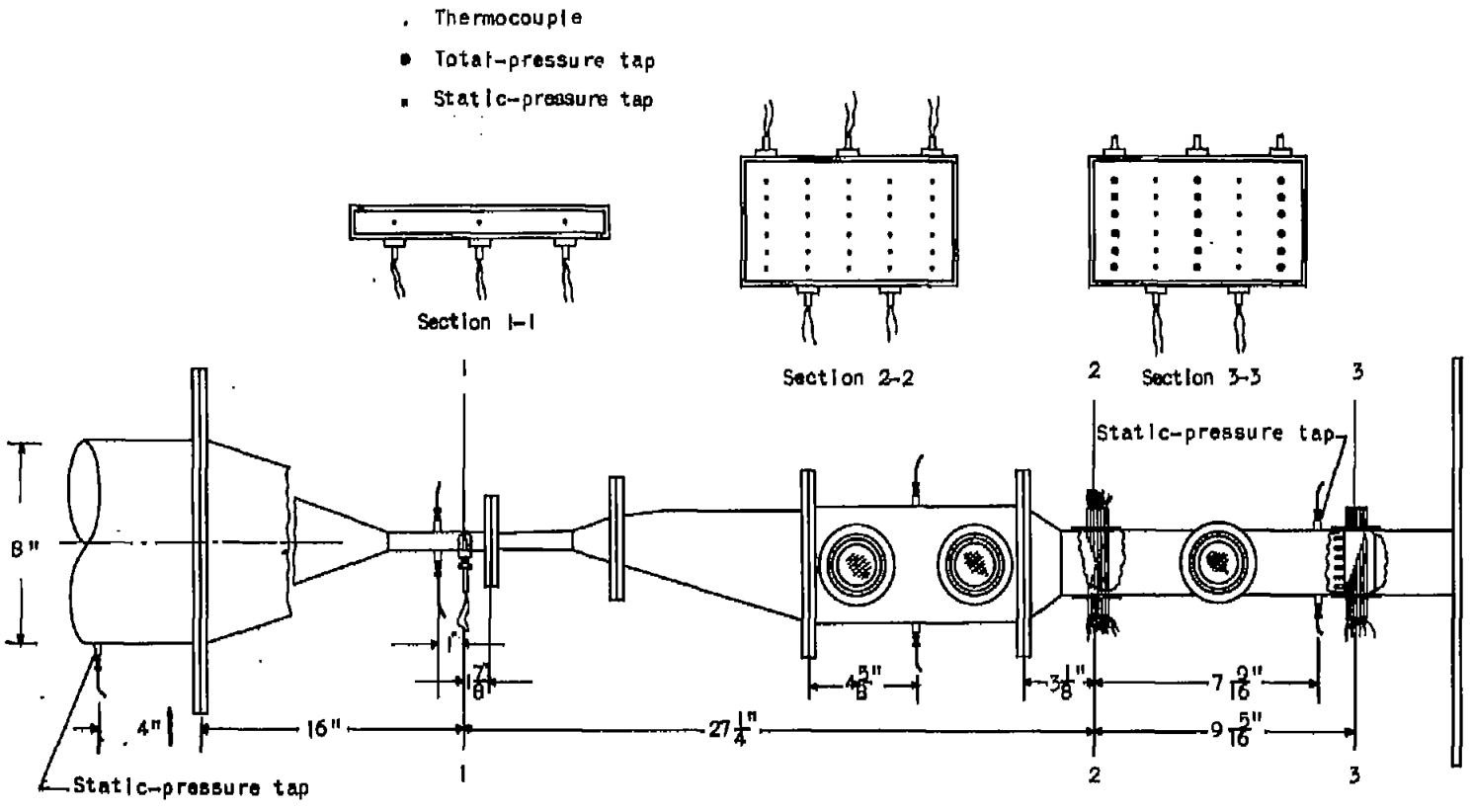

(a) Arrangement of instruments in duct and location of instrument station.

Figure 4. - Sketch of combustor-segment instrumentation.

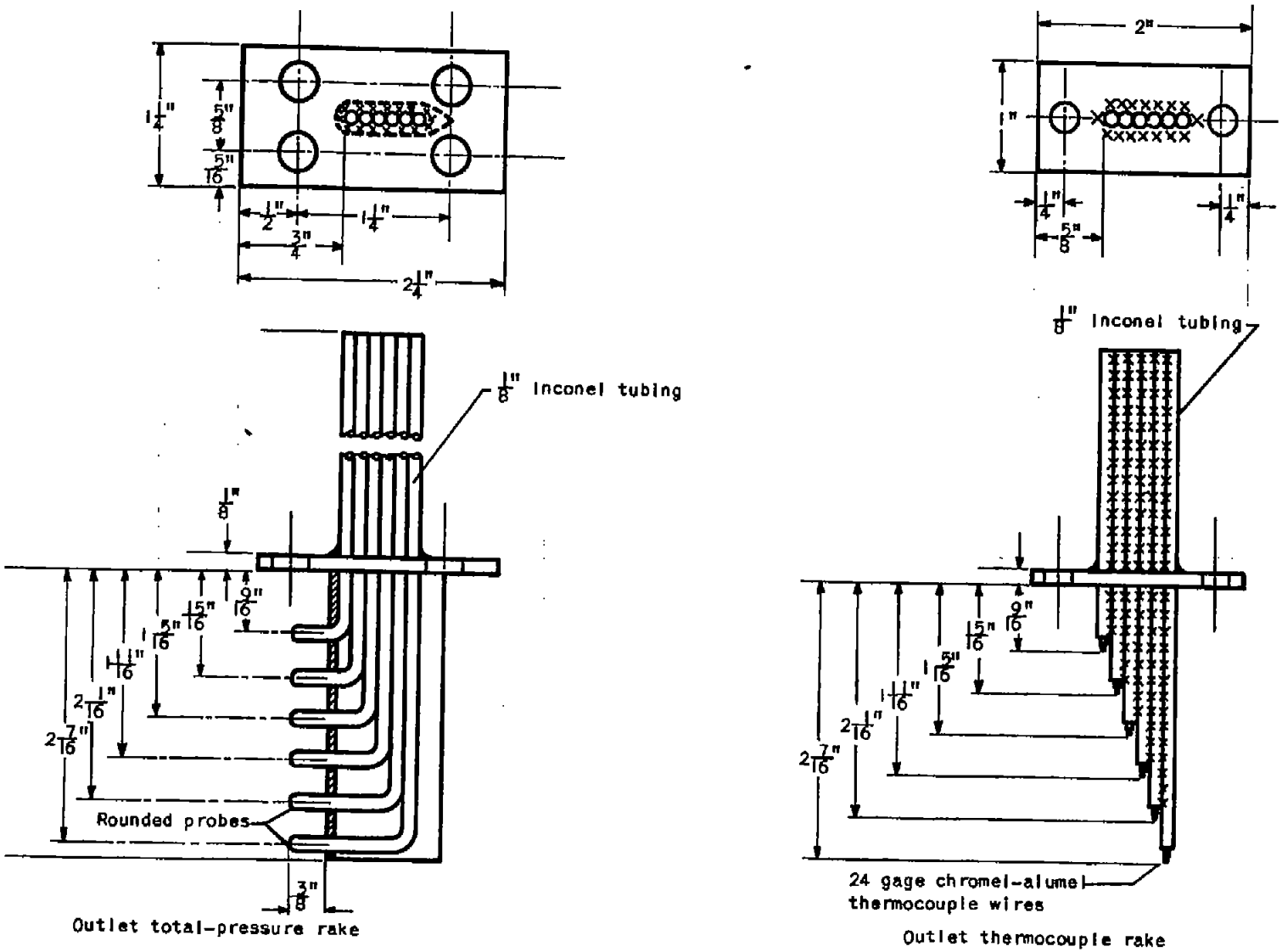

(b) Details of total-pressure rakes and thermocouple rakes.

Figure 4. - Concluded. Sketch of combustor-segment instrumentation.

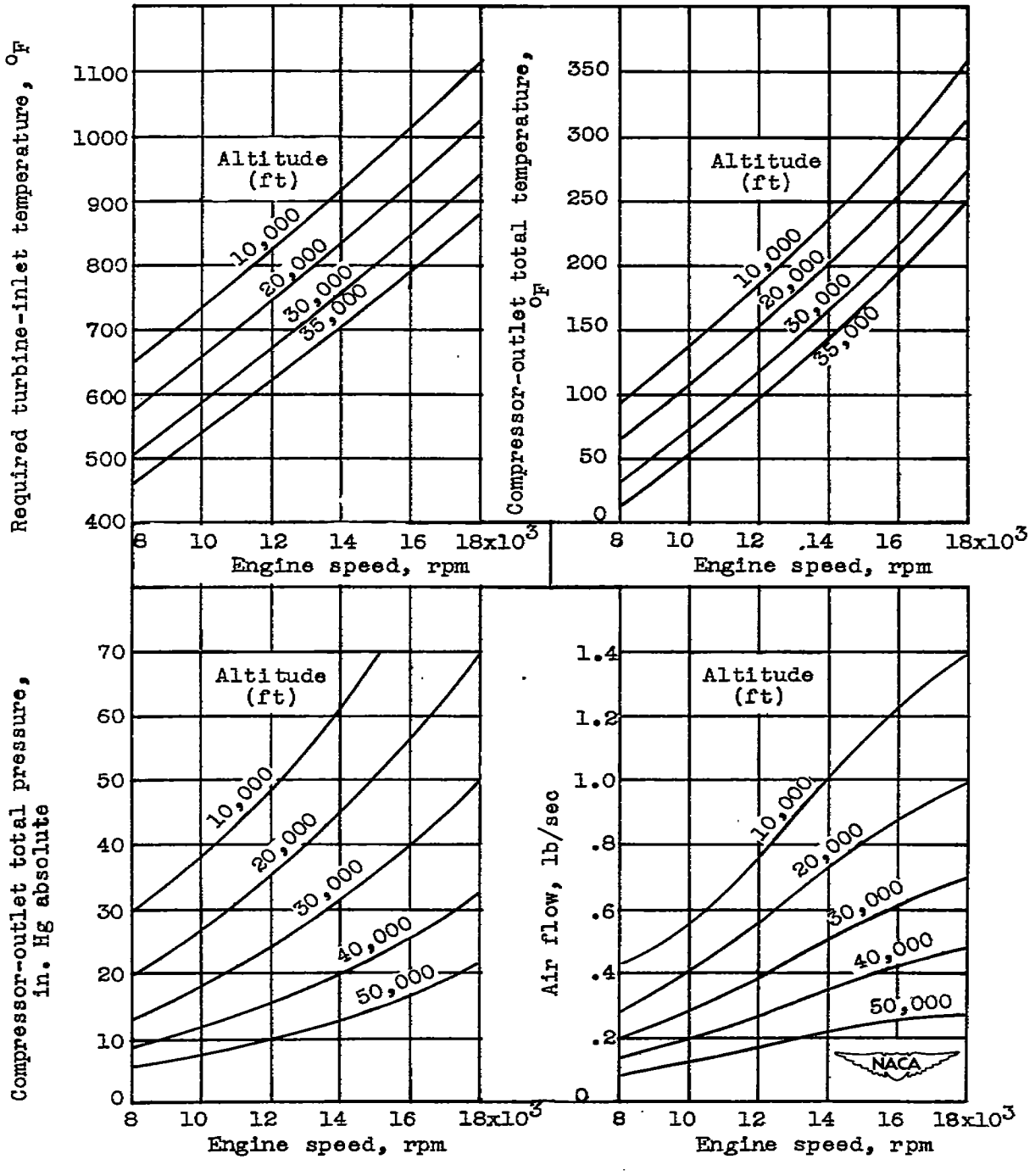

Figure 5. - Estimated inlet conditions of air flow, total pressure, temperature, and required turbine-inlet temperature of one-eighth segment of proposed turbojet combustor. Tail-cone area, 43.3 square inches; flight speed, 470 miles per hour; engine inlet-diffuser efficiency, 100 percent.

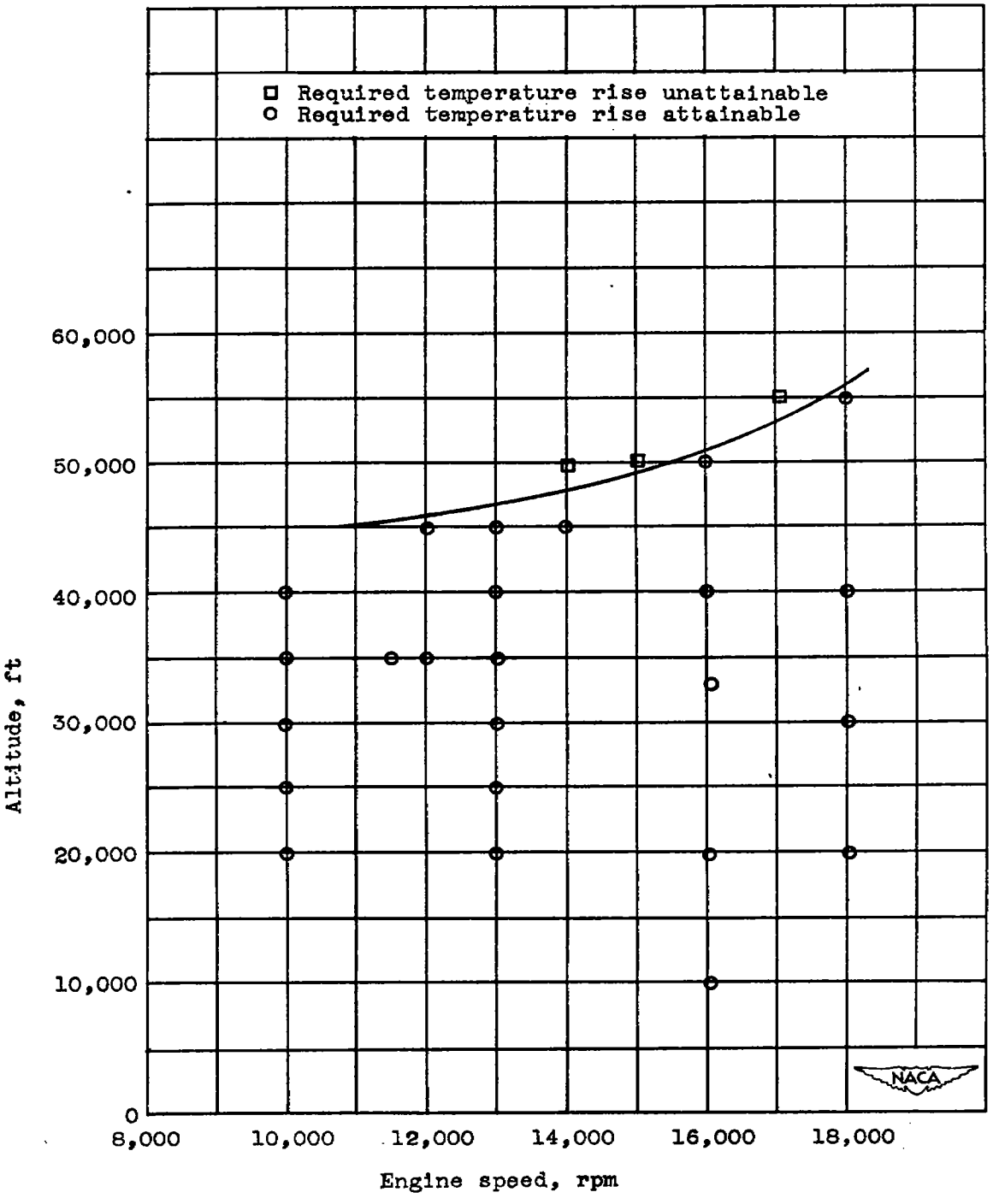

Figure 6. - Altitude operational limits of one-eighth segment of proposed turbojet combustor. Flight speed, 375 miles per hour.

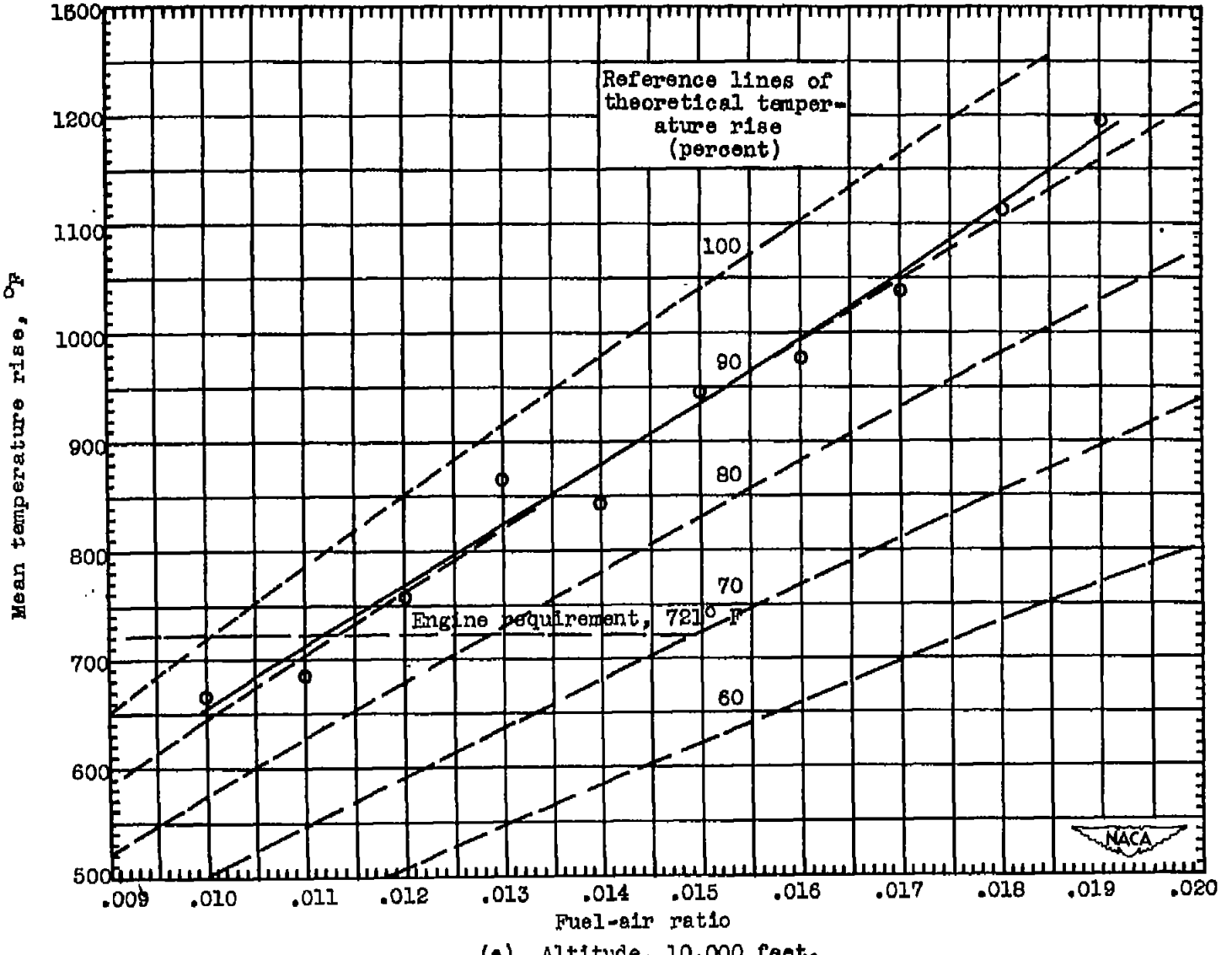

(a) Altitude, 10,000 feet.

Figure 7. - Effect of fuel-air ratio on mean temperature rise through one-eighth segment of proposed turbojet combustor. Engine speed, 16,000 rpm.

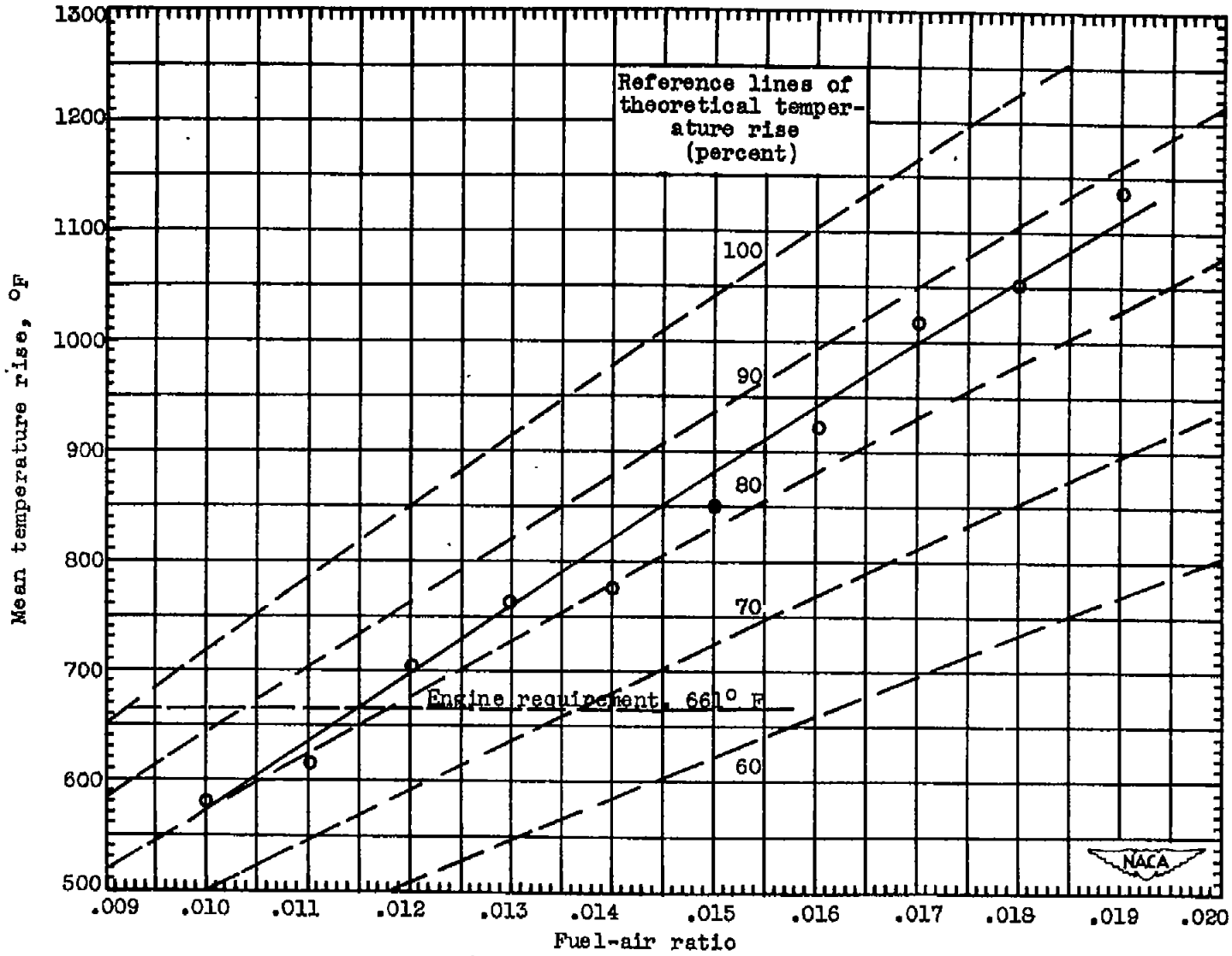

(b) Altitude, 20,000 feet.

Figure 7. - Continued. Effect of fuel-air ratio on mean temperature rise through one-eighth segment of proposed turbojet combustor. Engine speed, 16,000 rpm.

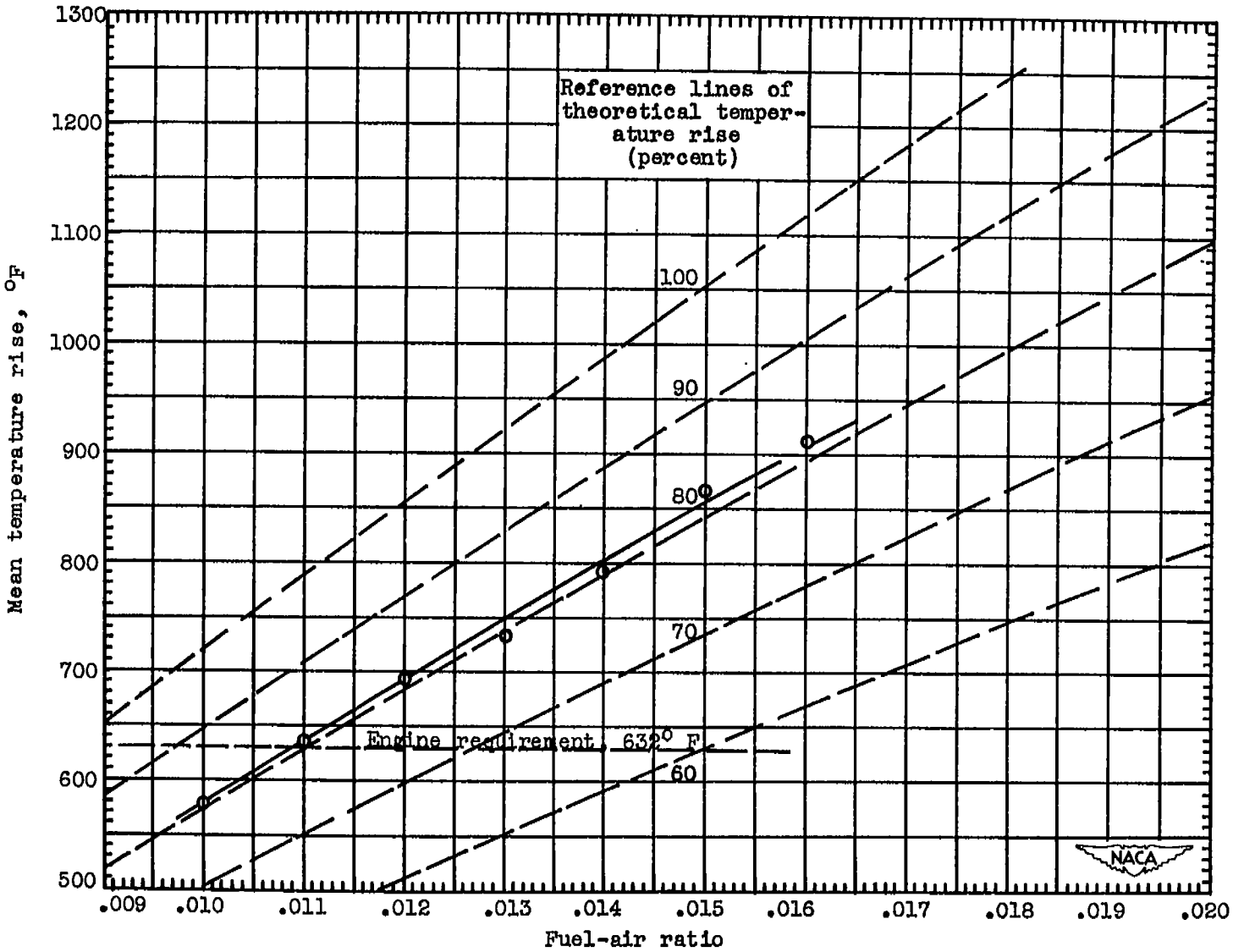

(c) Altitude, 33,000 feet.

Figure 7. - Continued. Effect of fuel-air ratio on mean temperature rise through one-eighth segment of proposed turbojet combustor. Engine speed, 16,000 rpm.

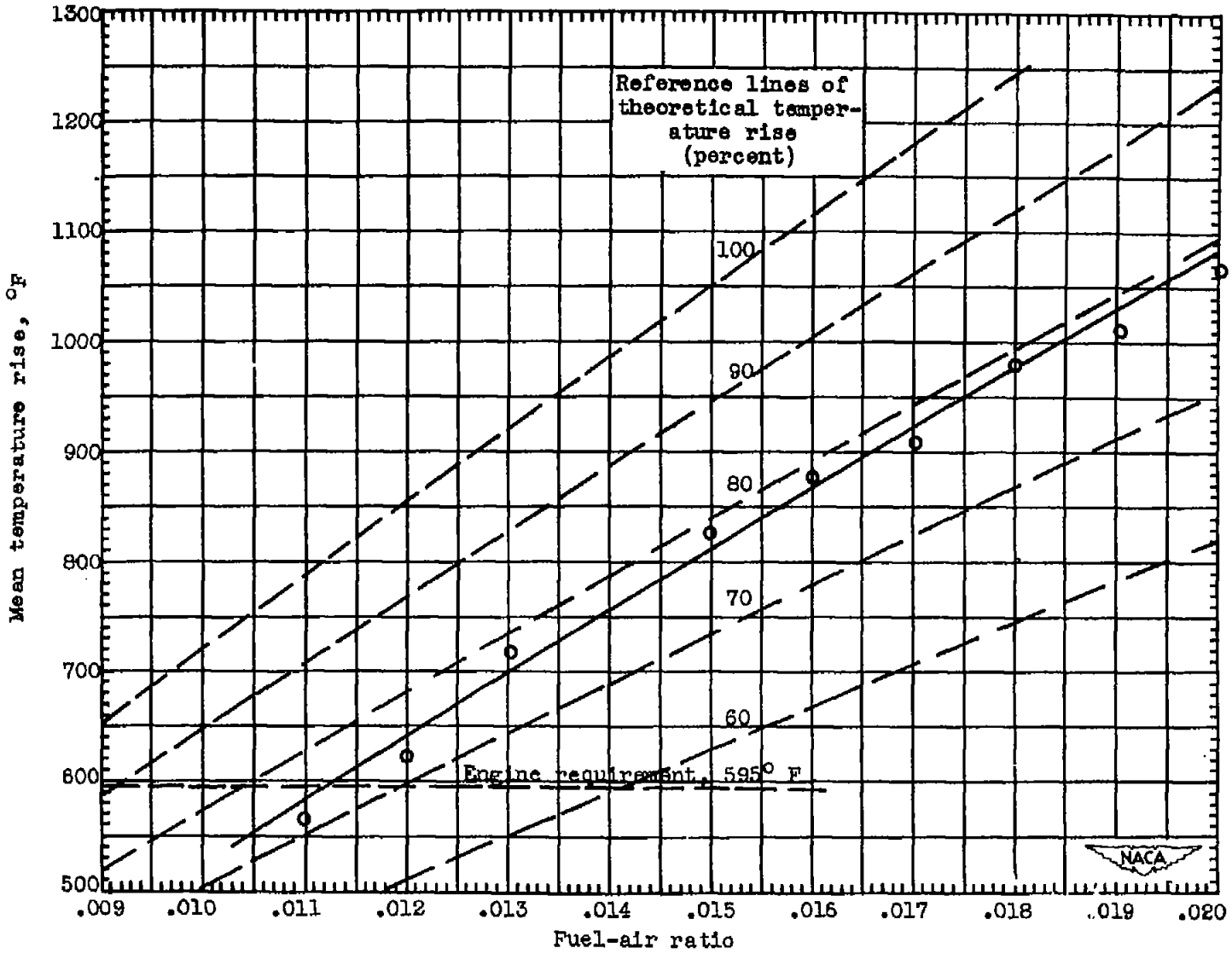

(d) Altitude, 40,000 feet.

Figure 7. - Concluded. Effect of fuel-air ratio on mean temperature rise through one-eighth segment of proposed turbojet combustor. Engine speed, 16,000 rpm.

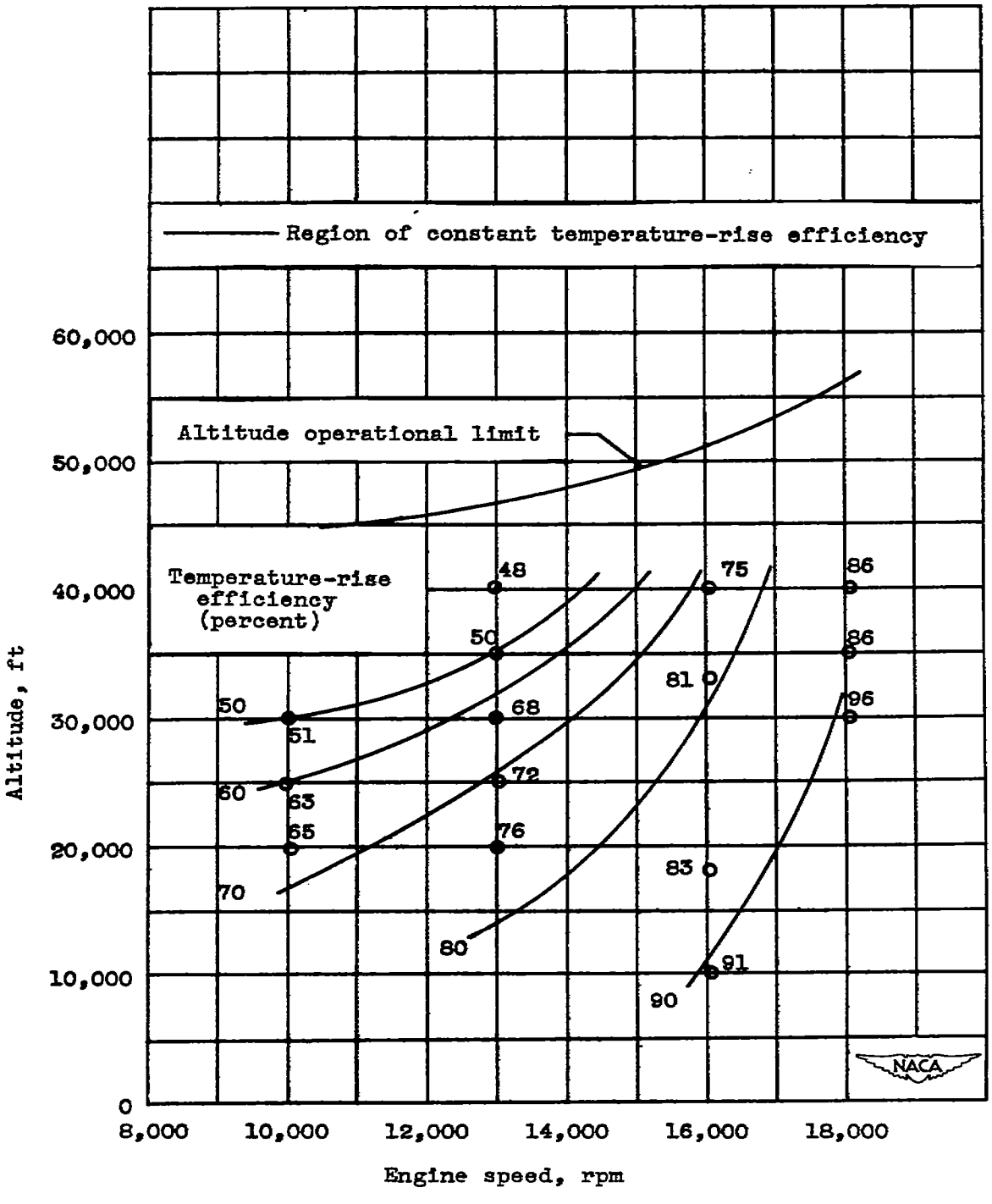

Figure 8. - Temperature-rise-efficiency contour diagram of one-eighth segment of proposed turbojet combustor over operating range below altitude operation limits.

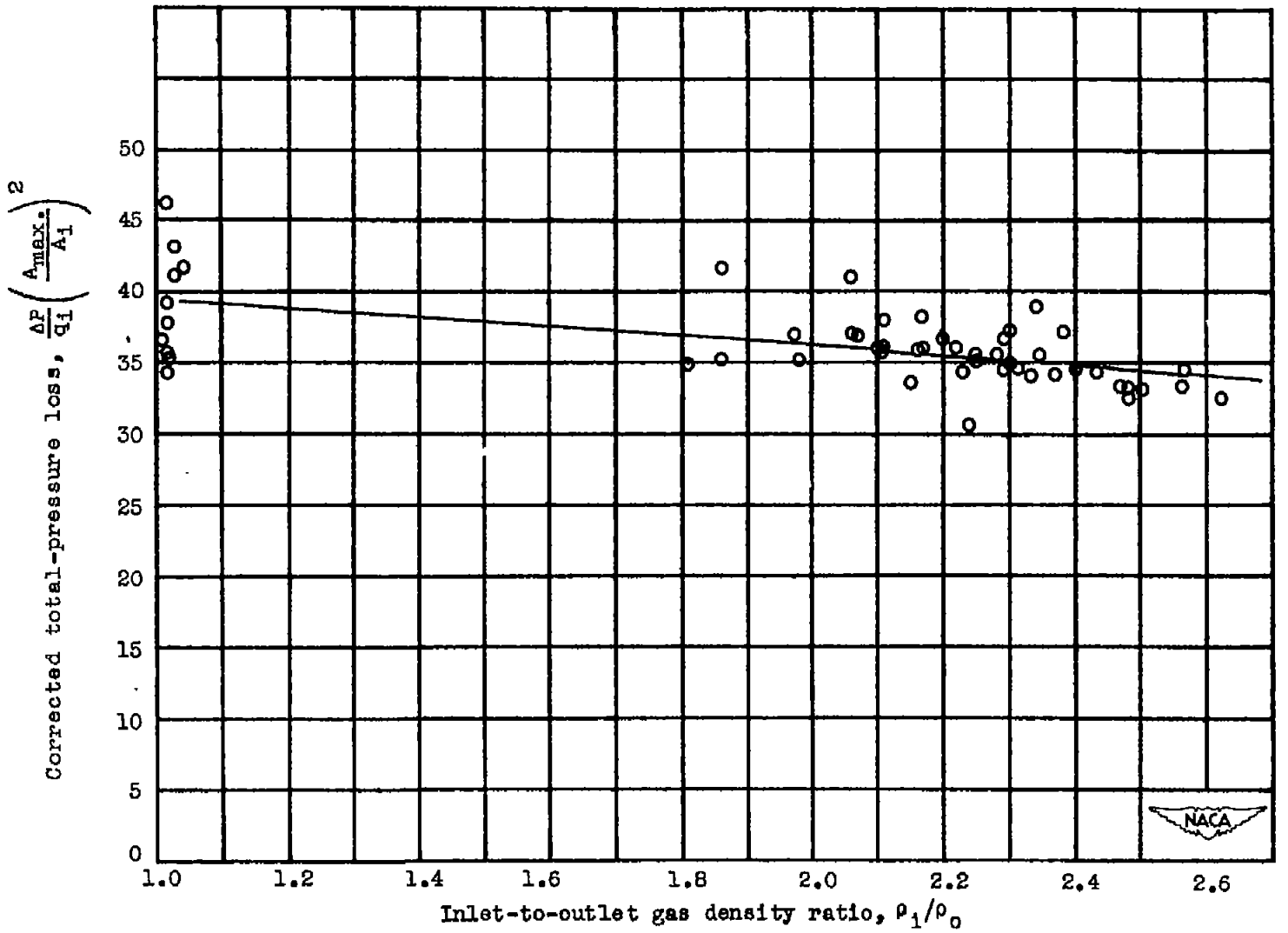

Figure 9. - Total-pressure loss through one-eighth segment of proposed turbojet combustor expressed as fraction of inlet kinetic pressure and as function of inlet-to-outlet gas density ratio.

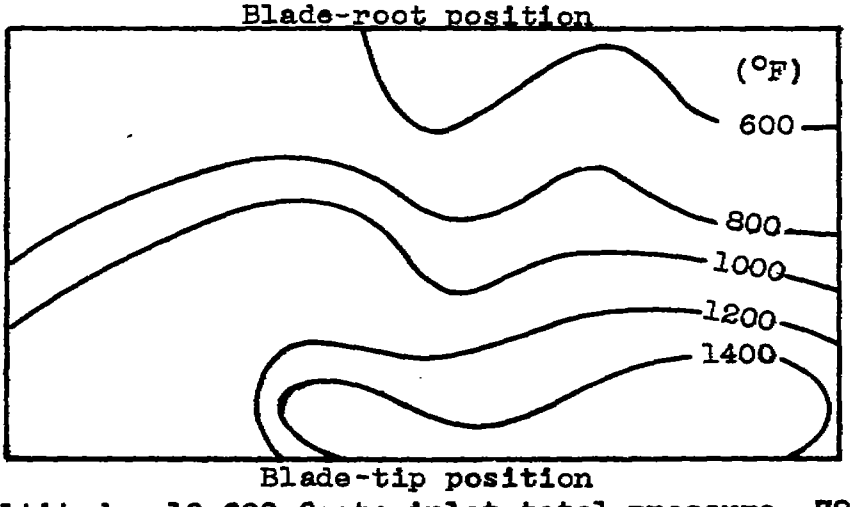

(a) Altitude, 10,000 feet; inlet-total pressure, 78.5 inches mercury absolute; inlet temperature, 294° F; air flow, 1.22 pounds per second; mean-outlet temperature, 1049° F; required outlet temperature, 1015° F.

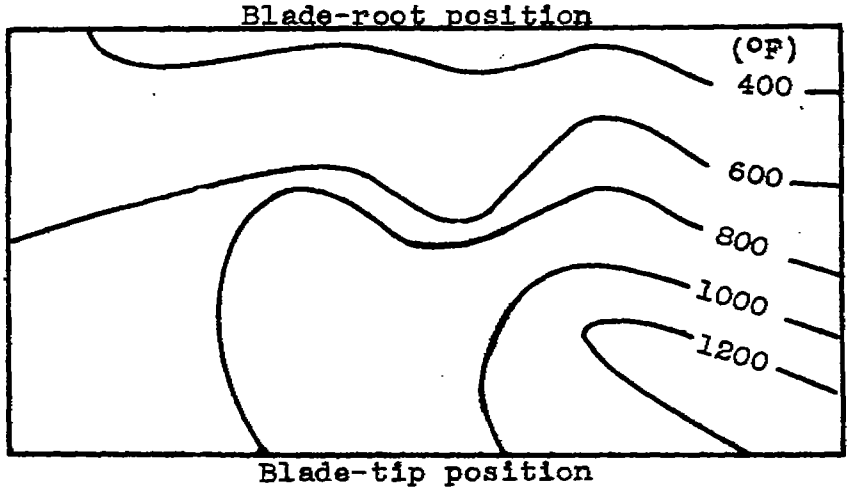

(b) Altitude, 40,000 feet; inlet-total pressure, 26.0 inches mercury absolute; inlet temperature, 209° F; air flow, 0.42 pound per second; mean-outlet temperature, 834° F; required outlet temperature, 794° F.

Figure 10. - Typical combustor-outlet gas temperature contour diagrams of one-eighth segment of proposed turbojet combustor. Engine speed, 16,000 rpm; fuel-air ratio, 0.014.

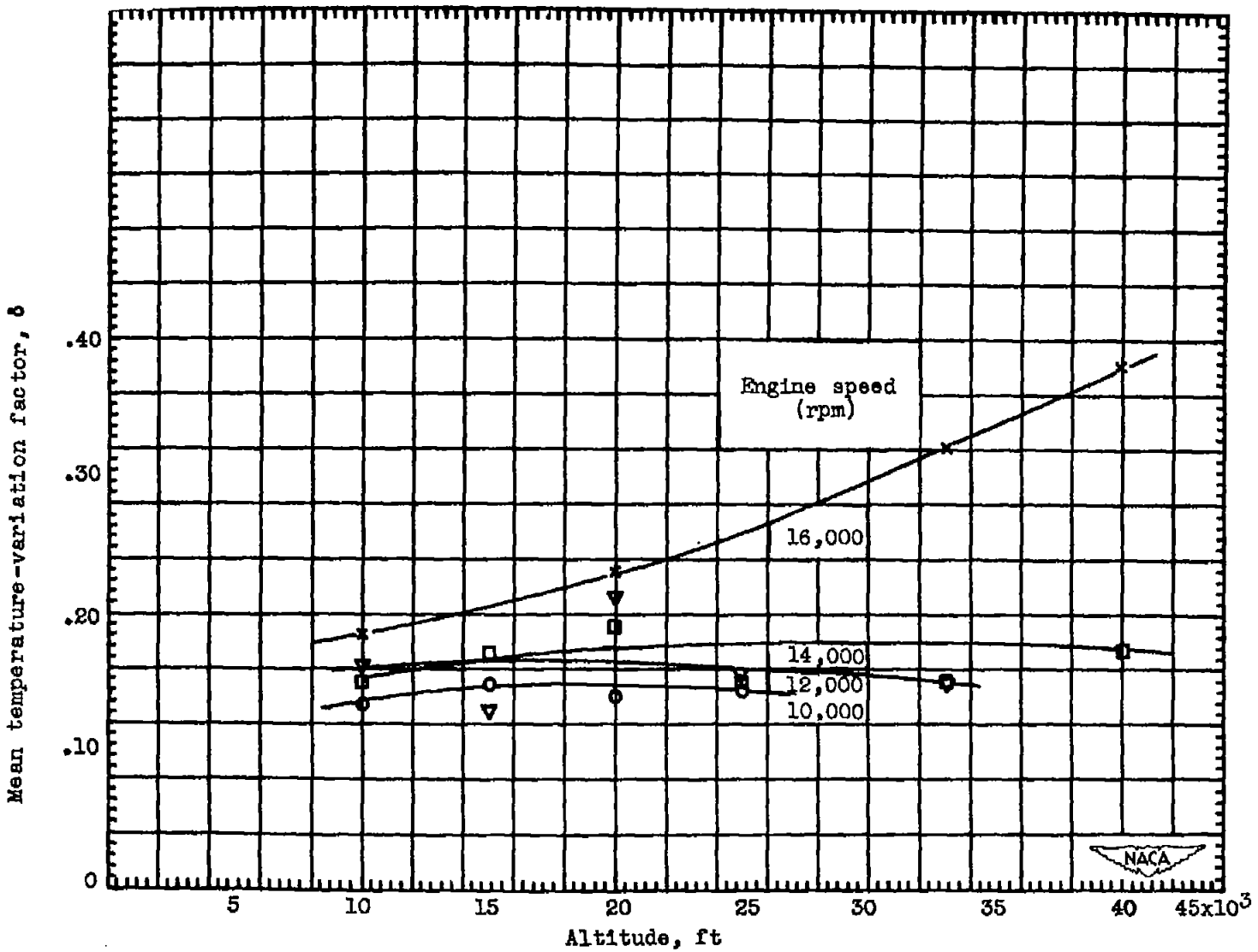

Figure 11. - Effect of various altitudes and engine speeds simulated by inlet conditions on mean outlet-temperature-variation factor, δ. Fuel-air ratio, 0.015.

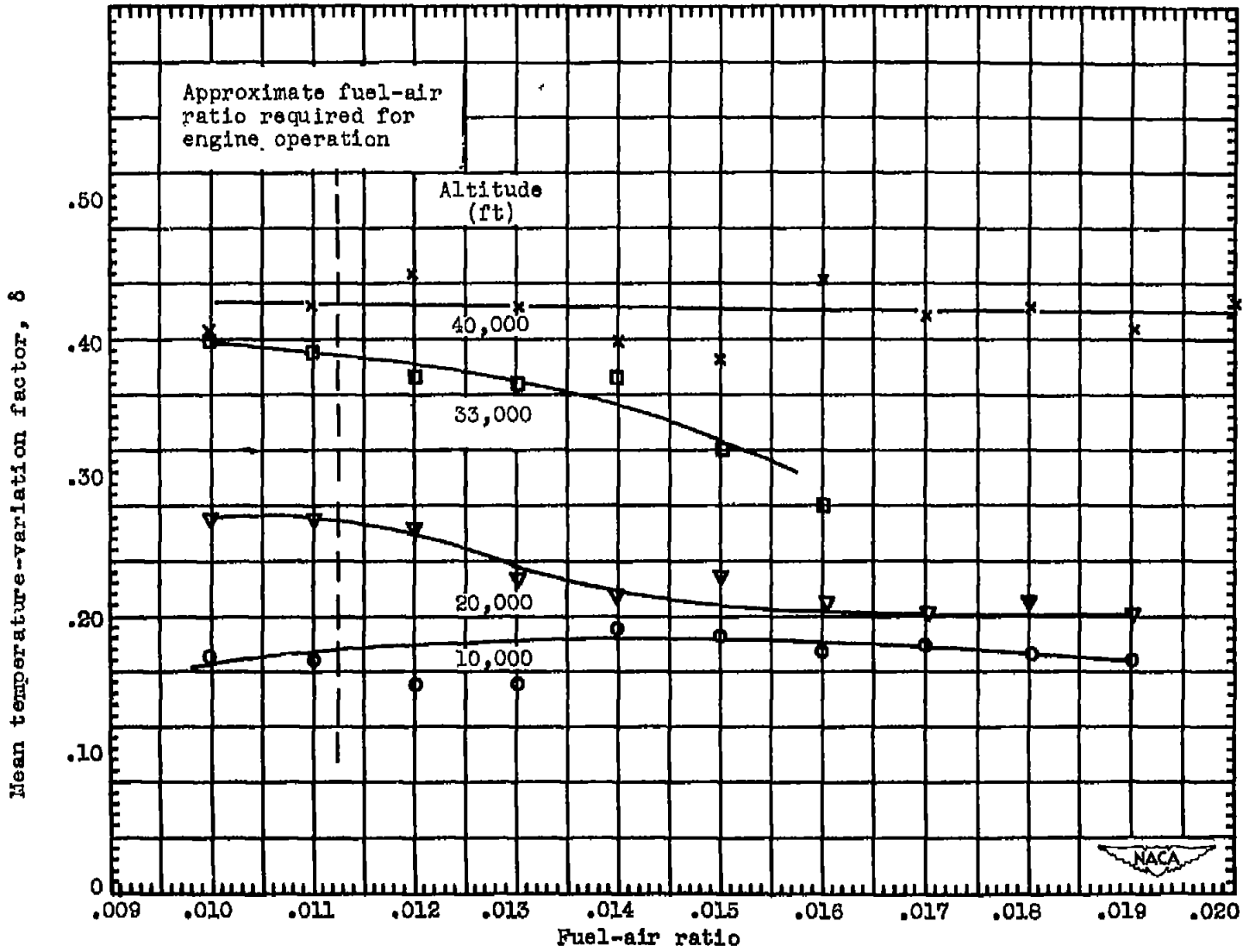

Figure 12. - Effect of fuel-air ratio on mean outlet temperature-variation factor δ. Engine speed, 16,000 rpm.

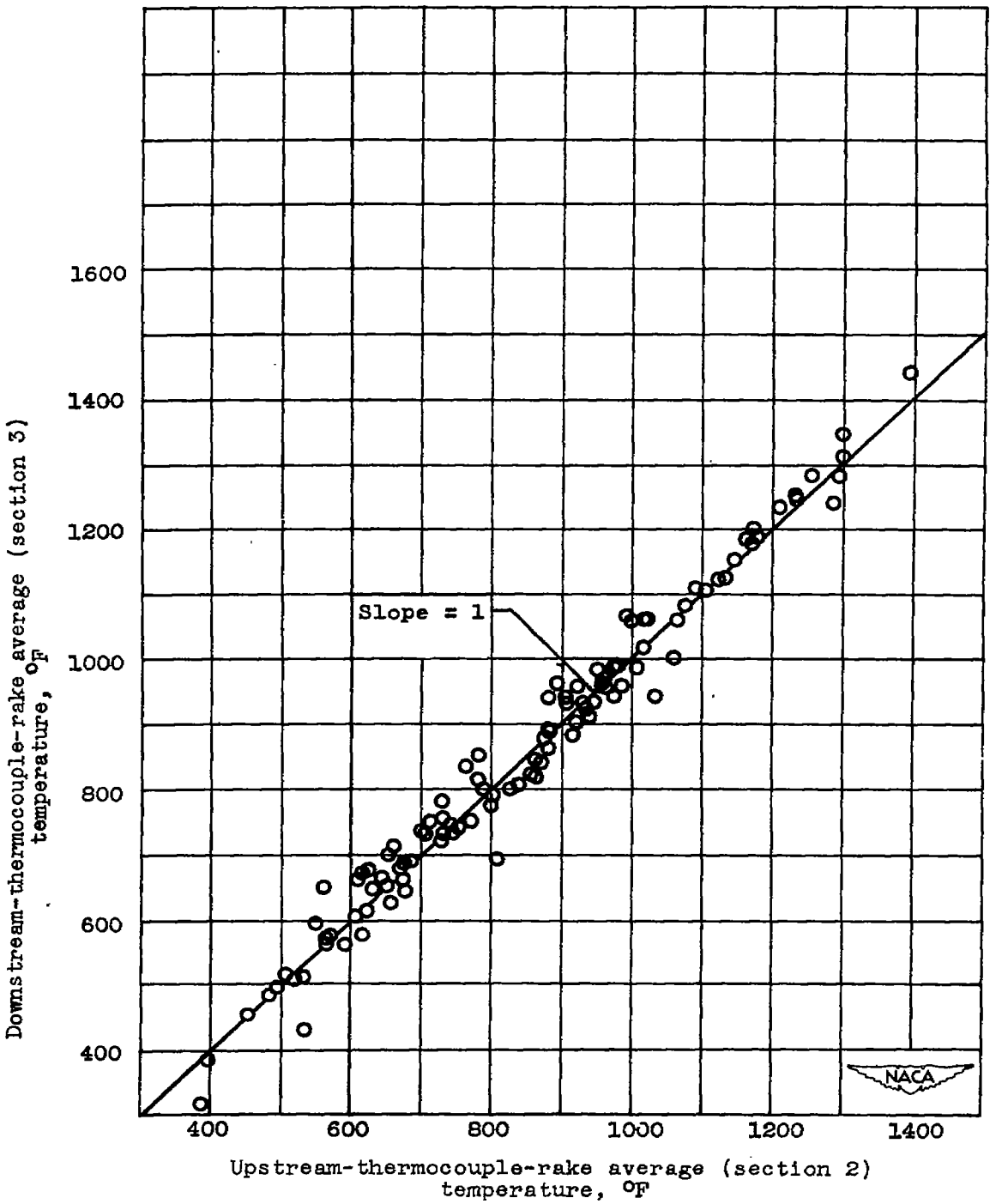

Figure 13. - Comparison of upstream-thermocouple-rake average (section 2) with downstream-thermocouple-rake average (section 3) temperature.

NASA Technical Library
3 1176 01425 9791