Copy No. [redacted]

RM No. L8E28

[redacted]

NACA RM No. L8E28
RM L8E28
7136

TECH LIBRARY KAFB, NM
0143975

NACA

RESEARCH MEMORANDUM

FREE-FLIGHT INVESTIGATION AT TRANSONIC AND SUPERSONIC SPEEDS OF A WING-AILERON CONFIGURATION SIMULATING THE D-558-2 AIRPLANE

By

Carl A. Sandahl

Langley Memorial Aeronautical Laboratory
Langley Field, Va.

[redacted]

NATIONAL ADVISORY COMMITTEE
FOR AERONAUTICS
WASHINGTON
July 21, 1948

[redacted]

319.98/13

Classification cancelled (or changed to UNCLASSIFIED)

By Authority of NASA Tech Pub Announcement #123
(OFFICER AUTHORIZED TO CHANGE)

By ..... 22 May 61
NAME AND

.....
GRADE OF OFFICER MAKING CHANGE)

3 Apr 61
DATE

TECH LIBRARY KAFB, NM
0143975

NATIONAL ADVISORY COMMITTEE FOR AERONAUTICS

RESEARCH MEMORANDUM

FREE-FLIGHT INVESTIGATION AT TRANSONIC AND SUPERSONIC SPEEDS OF A WING-AILERON CONFIGURATION SIMULATING THE D-558-2 AIRPLANE

By Carl A. Sandahl

SUMMARY

An investigation of the rolling effectiveness at transonic and supersonic speeds of a wing-aileron configuration simulating the D-558-2 airplane has been made by means of a rocket-propelled test vehicle. The variation of rolling effectiveness with Mach number is similar to that obtained previously for tapered sweptback wings having full-span, 0.2-chord ailerons.

INTRODUCTION

In the course of an investigation of wing-aileron rolling-effectiveness characteristics at transonic and supersonic speeds being conducted by the Pilotless Aircraft Research Division of the Laboratory utilizing rocket-propelled test vehicles in free flight, a wing-aileron configuration simulating the D-558-2 airplane was tested. The wing tested was sweptback 35° at the 30-percent chord line, had an aspect ratio of 3.54, a taper ratio of 0.56, and employed NACA 63-010 (root) and NACA 63_1-012 (tip) airfoil sections normal to the wing 30-percent chord line. The ailerons were hinged at the 0.85 chord line and extended over the outboard 45-percent wing span. The test, which was made by means of the free-flight technique described in references 1 and 2, permits the evaluation of the wing-aileron rolling effectiveness over the Mach number range from about 0.6 to 1.8 at relatively large scale. The test was made during January 1948.

SYMBOLS

$pb/2V$ wing-tip helix angle, radians

C_D drag coefficient based on total exposed wing area of 1.563 square feet

[redacted]

δ_a deflection of each aileron measured in plane normal to hinge line, degrees

M Mach number

R Reynolds number based on average exposed wing chord of 0.58 foot

TEST VEHICLES AND TESTS

The general arrangement of the test vehicle is shown in figures 1 and 2. Additional information pertinent to the test vehicle is given in table I. The wings and fuselage of the test vehicle were constructed mainly of wood. The wing-aileron configuration under investigation is attached to the rearward portion of the fuselage in a three-wing arrangement. It should be noted that unpublished tests of three-wing and four-wing configurations indicate that, with regard to rolling-effectiveness characteristics, the interference effects between the wings are negligible. The aileron deflection is preset and constant for each flight and for the present tests was 5°.

The wings are stiffened by means of steel plates cycle-welded into the upper and lower surfaces as shown in figure 1. The torsional stiffness of this construction has been shown by tests reported in reference 2 to be sufficient to reduce the effects of wing twisting to a negligible amount.

The test vehicle was propelled by a two-stage rocket-propulsion system to a Mach number of 1.9. During coasting flight following burnout of the rocket motor, time histories of the rolling velocity produced by the ailerons (obtained with spinsonde radio equipment) and the flight-path velocity (obtained with Doppler radar) were recorded. These data, in conjunction with atmospheric data obtained with radiosondes, permit the evaluation of the rolling effectiveness parameter $\frac{pb/2V}{\delta_a}$ as a function of Mach number. The drag coefficient of the test vehicles was also obtained by a process involving the graphic differentiation of the curve of flight-path velocity against time. The scale of the tests is indicated by the curve of Reynolds number against Mach number shown in figure 3. A complete description of the technique is given in references 1 and 2.

ACCURACY

The accuracy of the test results is estimated to be within the following limits:

[redacted]

$\frac{pb/2V}{\delta_a}$ (due to limitations on model constructional accuracy). . . ± 0.001

$\frac{pb/2V}{\delta_a}$ (due to limitations on instrumentation). . . . . ± 0.0005

C_D . . . . . ± 0.002

M . . . . . ± 0.005

It will be noted, as pointed out in reference 1, that owing to the relatively small moment of inertia about the roll axis, the measured values of $\frac{pb/2V}{\delta_a}$ are substantially steady-state values even though the test vehicles are experiencing an almost continuous rolling acceleration or deceleration. Except for abrupt changes of $\frac{pb/2V}{\delta_a}$ with Mach number, which occur in the Mach number range from about 0.90 to 0.97, the correction is estimated to be within 3 percent. Between Mach numbers of 0.90 and 0.97, the maximum correction corresponding to the maximum rolling acceleration attained in the present test of 50 radians per second squared, assuming a damping-in-roll coefficient of 0.2, is 12.5 percent. The data presented herein have not been corrected for inertia effects.

RESULTS

The results of the present investigation are shown in figure 4 as curves of $\frac{pb/2V}{\delta_a}$ and C_D as functions of Mach number. The variation of wing-aileron rolling effectiveness with Mach number is similar to that obtained previously for tapered sweptback wings having full-span, 0.2-chord ailerons. (See reference 3.)

Langley Memorial Aeronautical Laboratory
National Advisory Committee for Aeronautics
Langley Field, Va.

REFERENCES

1. Sandahl, Carl A., and Marino, Alfred A.: Free-Flight Investigation of Control Effectiveness of Full-Span 0.2-Chord Plain Ailerons at High Subsonic, Transonic, and Supersonic Speeds to Determine Some Effects of Section Thickness and Wing Sweepback. NACA RM No. L7D02, 1947.

2. Sandahl, Carl A.: Free-Flight Investigation of Control Effectiveness of Full-Span, 0.2-Chord Plain Ailerons at High Subsonic, Transonic, and Supersonic Speeds to Determine Some Effects of Wing Sweepback, Taper, Aspect Ratio, and Section Thickness Ratio, NACA RM No. L7F30, 1947.

3. Sandahl, Carl A., and Strass, H. Kurt: Additional Results in a Free-Flight Investigation of Control Effectiveness of Full-Span, 0.2-Chord Plain Ailerons at High Subsonic, Transonic, and Supersonic Speeds to Determine Some Effects of Wing Sweepback, Aspect Ratio, Taper, and Section Thickness Ratio. NACA RM No. L7L01, 1948.

TABLE I

GEOMETRIC CHARACTERISTICS OF TEST VEHICLE

Total exposed wing area, square ft	1.563
Aspect ratio	[a]3.54
Taper ratio	[a]0.56
Sweepback of wing leading edge, deg	38.7
Sweepback of wing trailing edge, deg	25.4
Ratio of aileron chord to wing chord	0.15
Ratio of aileron span to wing span	[a]0.4[redacted]
Moment of inertia about roll axis, slug-ft^2	0.056[redacted]

[a]Obtained by extending leading edge and trailing edge to center line of test vehicle.

[redacted]

[redacted]

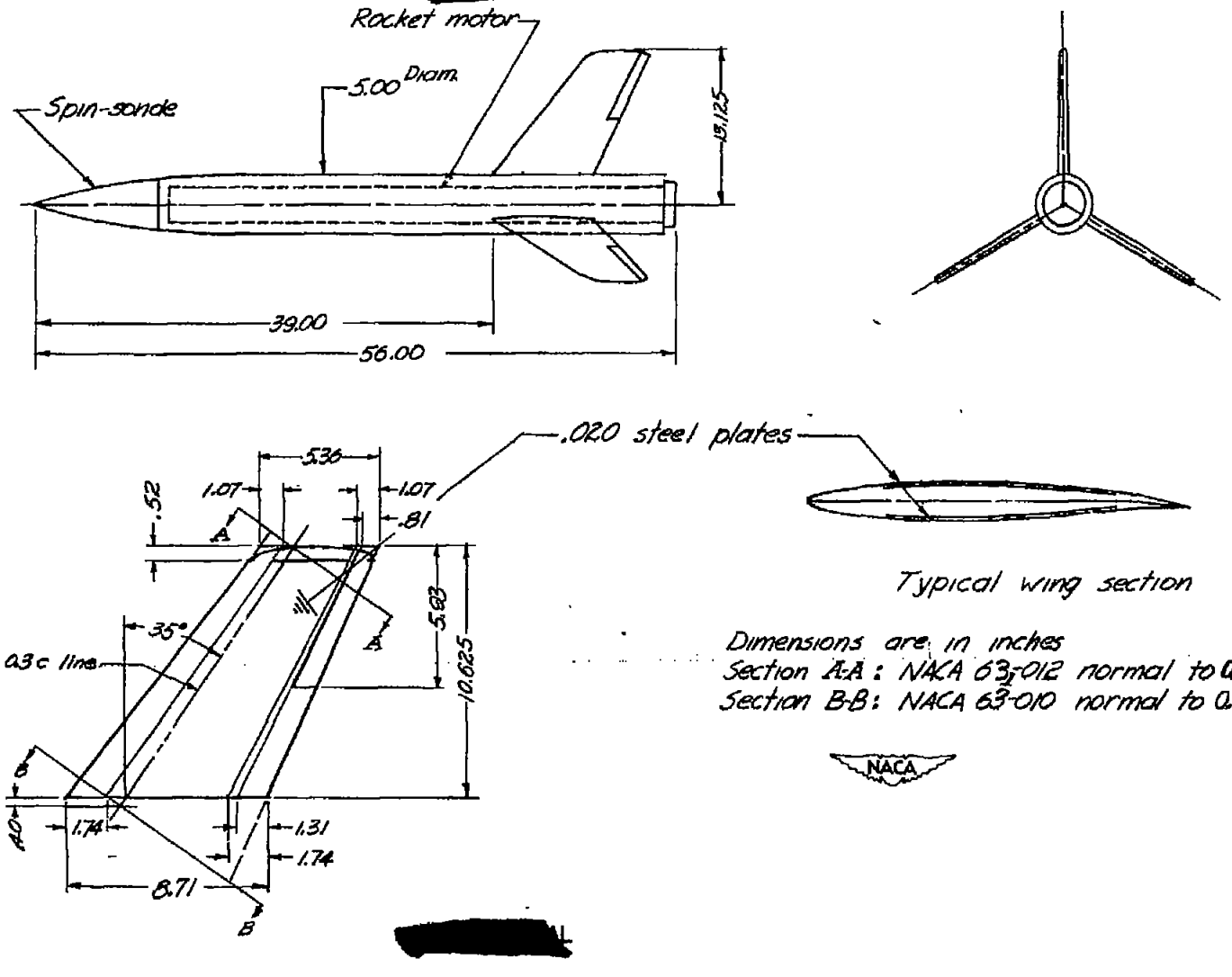

[redacted]

Figure 1.- General arrangement of test vehicle.

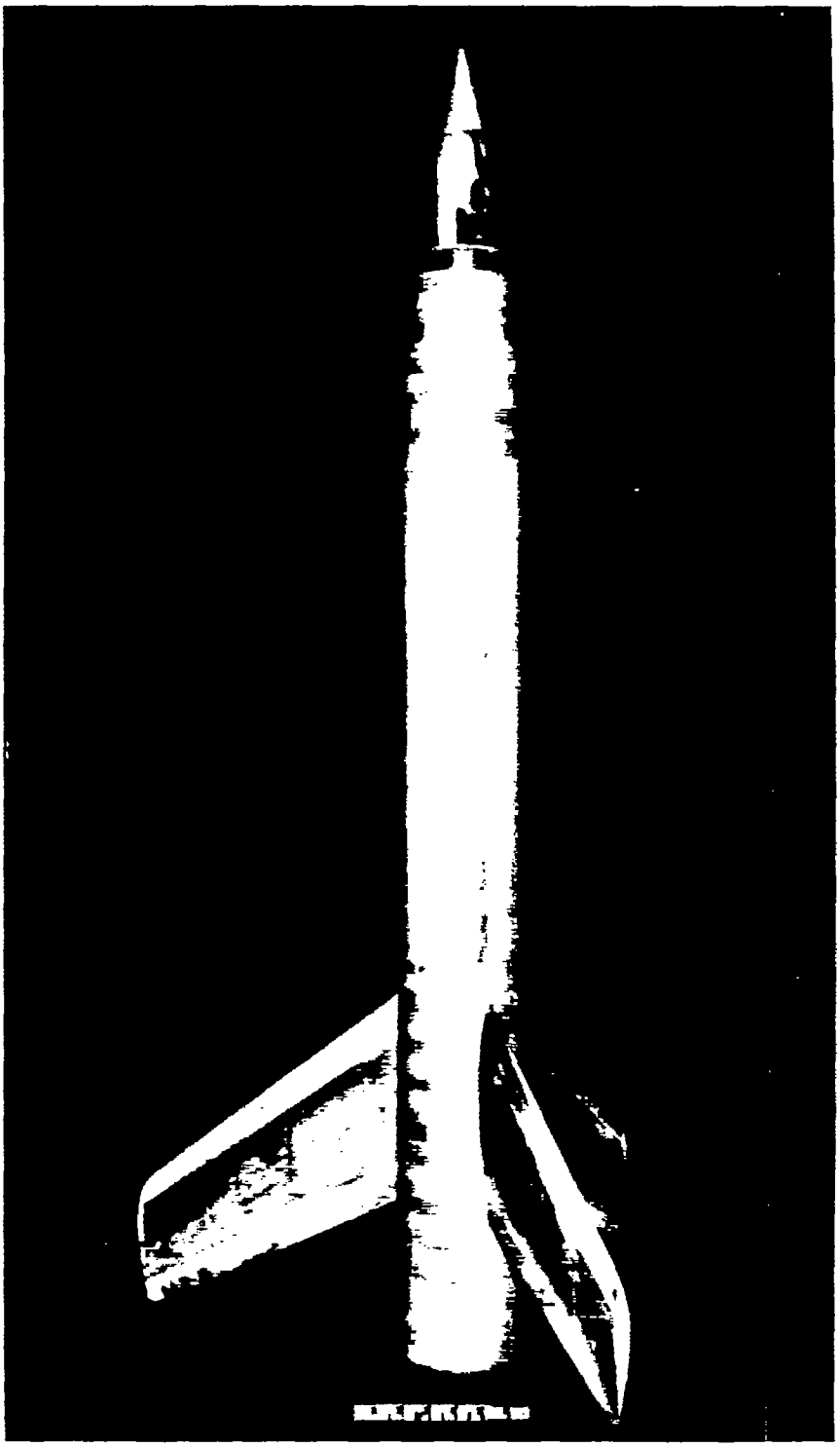

Figure 2.- Photograph of test vehicle.

[redacted]

NACA
L-55424

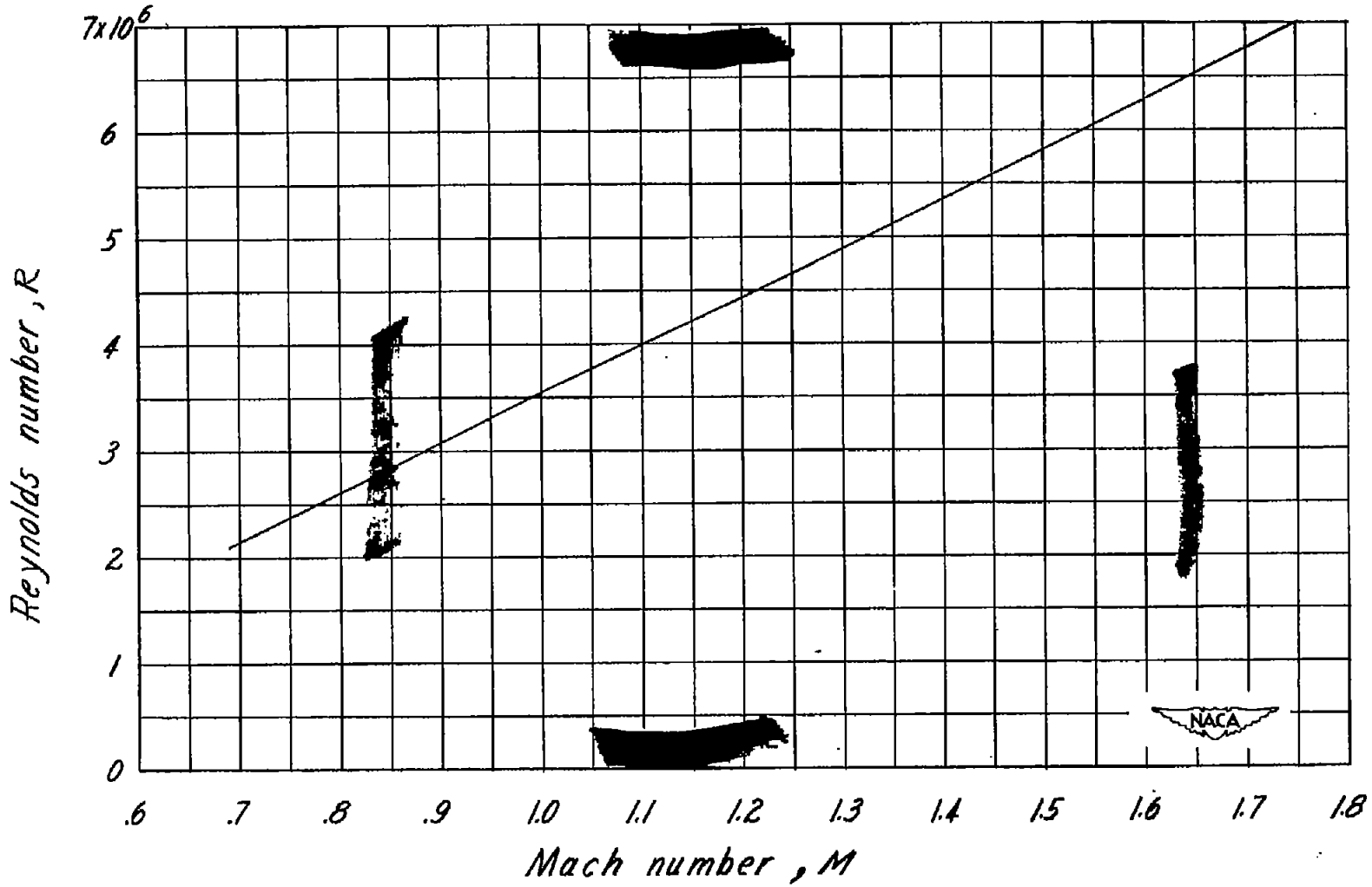

Figure 3.- Variation of Reynolds number with Mach number for test conditions.

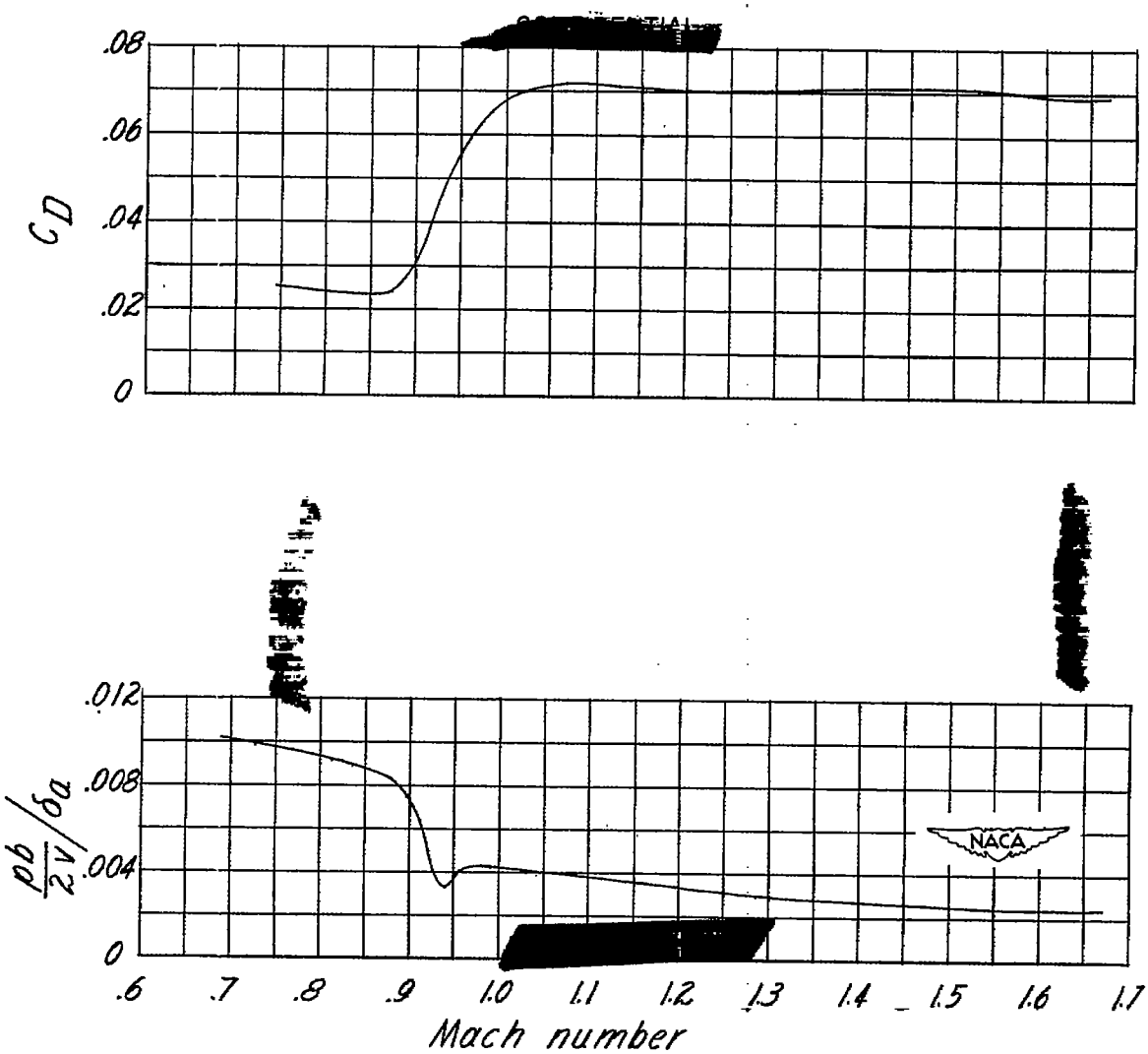

Figure 4.- Test results. $\delta_a = 5°$.