NACA TM No. 1192

7858

TECH LIBRARY KAFB, NM
0144776

NATIONAL ADVISORY COMMITTEE FOR AERONAUTICS

TECHNICAL MEMORANDUM

No. 1192

ROTATING DISKS IN THE REGION OF PERMANENT DEFORMATION

By F. László

Translation

"Geschleuderte Umdrehungskörper im Gebiet bleibender Deformation."
Zeitschrift für angewandte Mathematik und Mechanik,
Ingenieurwissenschaftliche Forschungsarbeiten, Bd. 5, Heft 4, Aug. 1925.

Washington
August 1948

AFMDC
TECHNICAL LIBRARY
AFL 2811

TECH LIBRARY KAFB, NM

0144776

NATIONAL ADVISORY COMMITTEE FOR AERONAUTICS

TECHNICAL MEMORANDUM No. 1192

ROTATING DISKS IN THE REGION OF PERMANENT DEFORMATION[1,*]

By F. László

The rapidly increasing power demand has led to the preferred use of large rotating machines because they have great advantages from a technical as well as from an economic point of view. Development progress in this well-established industrial art is faced with large difficulties. Thus it is disadvantageous, for example, in the cross section of a disk of axially uniform thickness with a small central hole, for the distribution of the stresses to be very uneven. The stressing of the inner cross-sectional fibers is substantially larger than that of the outer fibers; hence, in practice, a design may be loaded only to the extent that its greatest stress remains under the strain limit of the material with an assured margin; new methods must therefore be sought for obtaining a satisfactory stress equalization in the cross section of these disks where, in many cases, indispensable design irregularities exist.

An analogous problem was solved a decade ago by the Austrian artillery officer Uchatius. At that time, higher and higher requirements were placed on ordnance; this same difficulty occurred in the use of thick-wall bronze barrels. The stress distribution in the cross section was so uneven that of the entire cross section only a small portion could be used. Uchatius increased the utilization of gun barrels through an ingenious technological method in which he manufactured the barrel with a smaller bore than the

---

[1]The abstract of the same title, accepted as a dissertation of the author at the Darmstadt School of Technology (Reviewed by Prof. Dr. -Ing. Blaess and Prof. Dr. Schlink) was performed according to the suggestions and under the direction of Prof. Dr. Schlink and cand. ing. Willy Prager. I wish to express sincere thanks at this point for their assistance. The work was concluded in the summer of 1922.

*"Geschleuderte Umdrehungskörper im Gebiet bleibender Deformation." Zeitschrift für angewandte Mathematik und Mechanik, Ingenieurwissenschaftliche Forschungsarbeiten, Bd. 5, Heft 4, Aug. 1925, S. 281-293.

desired caliber and then, in the cold condition, expanded the bore to the desired dimension with a steel punch. The fibers of the inner cross section would therefore remain stretched with the strain limit raised; simultaneously, however, the fibers of the outer cross section would be so elastically stretched that at discharge a considerable leveling of the rather severe stress distribution would occur from the inner to the outer fibers. The experience with the Uchatius ordnance was a good indication of the technique that was in keeping with the state of advancement at that time.

As the work progressed, this example appeared to show that the load capacity of rotating disks could be increased by spinning them at high rotative speeds thus producing a residual strain in the fibers of the inner cross section. Similar investigations were repeatedly started during the last year. It must indeed be recognized that no solution of the problem has been reached in terms of what is known at present. In the first place, the researches of the AEG [NACA comment: Allgemeine Elektrische Gesellschaft] (reference 1), which have developed noteworthy results in many respects, are to be noted.

Stodola (reference 2) developed a strength calculation for overspeeded disks[2]. In reference 2, still other comunications are to be noted in connection with this problem.

Since Uchatius, different investigations of problems similar to those of thick-walled cannons have been encountered; for example, those of Krüger (reference 3), which contain a comprehensive bibliography both inside and outside this sphere.

Above all, the work of Lasche (reference 1) has led to the mathematical investigation of the problem of overspeeded disks.

1. Tangential cross-sectional loading. - The sum of the tangential stresses, which are produced by the centrifugal forces and are circumferentially uniform, should be designated as the tangential stress loading

$$T = \int_{(F)} \sigma_t dF \tag{1}$$

---

[2]The concept of spinning or overspeeding shall hereinafter be confined to the region of permanent deformation.

For an elementary mass in a rotating disk (fig. 1), the equilibrium condition with respect to radial displacement can be expressed as usual in the equation

$$\frac{\partial(\sigma_r x)}{\partial x}\,dx\,dz\,d\varphi + x\,\frac{\partial\tau}{\partial x}\,dx\,dz\,d\varphi$$

$$- \sigma_t\,dx\,dz\,d\varphi + \mu\omega^2\,x^2\,dx\,dz\,d\varphi = 0$$

where μ denotes the specific mass of the material and ω denotes the angular velocity.

When the previous equation is integrated across the entire cross section F, an expression for the radial equilibrium of the $d\varphi$ portion of the disk is obtained. This equation is

$$d\varphi \iint_{(F)} \frac{\partial(\sigma_r x)}{\partial x}\,dx\,dz + d\varphi \iint_{(F)} x\,\frac{\partial\tau}{\partial z}\,dx\,dz$$

$$- d\varphi \iint_{(F)} \sigma_t\,dx\,dz + \omega^2\,d\varphi \iint_{(F)} \mu x^2\,dx\,dz = 0$$

The first two members vanish within the limits of the cross section according to the law of action and reaction, and transform at the boundary of the cross section into the sum of the radial components of the rim loads, which act on the sector $d\varphi$.

If the equation under consideration is divided by $d\varphi$ and the variation of μ in consequence of the deformation is neglected, the following expression is obtained:

$$\iint_{(F)} \frac{\partial(\sigma_r x)}{\partial x}\,dx\,dz + \iint_{(F)} x\,\frac{\partial\tau}{\partial z}\,dx\,dz$$

$$+ \mu\omega^2 \int_{(F)} x^2\,dF = \int_{(F)} \sigma_t\,dF \qquad (2)$$

Accordingly, the tangential cross-sectional loading of a rotating disk is equal to the sum of the corresponding rim loading and the centrifugal force.

The corresponding rim loading or centrifugal force is hereby understood to be the sum of the radial components of rim forces or centrifugal loads, respectively, applied to the sector $d\varphi$ divided by the angle $d\varphi$.

This formulation is only valid for uniform peripheral deformation conditions but it is also valid for any chosen stress-strain relation of the material. 872

2. Rotating rings. - As a simple case, the behavior of rotating cylindrical bodies, which have so little thickness that the tangential stresses can be assumed uniform over the entire cross section and the radial stresses assumed negligible, will be first investigated. Axiomatically, all the loads and stresses must be related to the dimensions of the deforming body because in the region of permanent deformation those methods of calculation as applied in elastic theory, which consider the original dimensions of the body, would form an inadmissible source of error. With the established hypotheses, the shape and the size of the ring cross section can also be disregarded and at each instant only the aforementioned unit area that contains the center of gravity of the entire cross section need be considered. As a further simplification, the rings should be freely rotated; thus, cylindrical rings not loaded with rim forces should be investigated.

Because taking the dimensions of the deforming body into account at each instant is desired, the stress-strain relation of the material should also be related to the deforming cross section, thus the so-called true stresses are considered in their dependence on the strain. The investigation will be particularly extended for ductile materials, such as, steel, iron, copper, bronze, and so forth. The stress-strain relation of these materials in the region of permanent deformation can be expressed familiarly in the form

$$\sigma^{\gamma} = \zeta\epsilon \tag{3}$$

where σ and ϵ designate the true stress and unit strain, respectively, and γ and ζ designate characteristic constants of the given materials, which can be determined easily from rupture tests. Equation (3) can be obtained by simple curve fitting. In a rupture diagram of the material (fig. 2, σ_a curve), the abscissa corresponds (after appropriate determination of the scale) to the

specific strain and the ordinate corresponds to the stress σ_a, which is based on the original cross-sectional area. If the variation of the density in consequence of the deformation is neglected, the relation $\sigma = \sigma_a (1 + \epsilon)$ exists between the stress based on original area and the true stress in the region of permanent deformation. The curve of true stresses is obtained when the ordinates of the σ_a curve are multiplied by $(1 + \epsilon)$. This procedure is carried through only up to the horizontal branch of the σ_a curve because at this point the necking of the tensile specimen begins where the use of the conversion made with the help of the measured longitudinal strain loses all justification. On the curve of the true stresses, this so-called necking point can be determined in the customary manner in which the curve of true stresses is first laid out in the normal way beyond the expected necking point and then the tangent point is determined by a tangent drawn from the abscissa point $\epsilon = -1$. (See fig. 2.)

872

A ring without rim loading could thus be rotated with such a high peripheral velocity that the tangential stress or strain would exceed the elastic limit of the material and the ring would remain stretched in the tangential direction. The material is thereby hardened and the strain in the ring would come to equilibrium at uniform angular velocity when this condition exactly satisfies the requirements of equation (2). For the ring element under consideration, which at any time possesses the cross-sectional area 1 and the same radius of gyration as the entire deforming ring (fig. 3), this equation can be written as follows:

$$\sigma = \mu\omega^2 r^2 = \mu\omega^2 r_0^2 (1 + \epsilon)^2 \tag{4}$$

In this equation, σ is the average tangential stress, ϵ the specific tangential strain, r the increased, and r_0 the original radius of gyration of the entire ring section.

Equations (3) and (4) thus describe the stress-strain history of the rotating ring.

Whether the ring remains stable in the calculated equilibrium condition or whether, under certain conditions, deforms further without increase in angular velocity is of greatest significance. Thus it is hypothesized that the ring exists in momentary equilibrium at an angular velocity ω with resulting strain ϵ, but that, in spite of uniform angular velocity (ω = constant), the entire circumference undergoes a small additional strain $d\epsilon$. This additional strain would increase the stress in the material from σ to $\sigma + d\sigma$ according to equation (3), as well as also increasing

the cross-sectional tangential loading from $\mu\omega^2 r_0^2 (1 + \epsilon)^2$ to

$$\mu\omega^2 r_0^2 \left[(1 + \epsilon) + d\epsilon\right]^2 \approx \mu\omega^2 r^2 \left(1 + \frac{2d\epsilon}{1 + \epsilon}\right)$$

872

The additional strain, however, cannot take place as long as it will harden the material more than the increase in tangential loading; consequently, the strain cannot occur as long as the condition

$$\sigma + d\sigma > \mu\omega^2 r^2 \left(1 + \frac{2d\epsilon}{1 + \epsilon}\right)$$

or with consideration of equation (4) that

$$\frac{d\sigma}{d\epsilon} > \frac{\sigma}{\frac{1 + \epsilon}{2}}$$

is satisfied. This stipulation characterizes the region of stable rotation in which a further deformation of the rotating ring can be evoked only by increasing the angular velocity.

The critical point of a freely rotating ring will be designated $(\sigma_r, \epsilon_r, \mu_r)$ where

$$\frac{d\sigma}{d\epsilon} = \frac{\sigma}{\frac{1 + \epsilon}{2}} \tag{5}$$

In graphical representation, it is conveniently ascertained from the true stress-strain curve (fig. 2) that the region of rotational stability reaches from the beginning of the deformation to the point where the subtangent amounts to $1 + \epsilon/2$. This point can be quickly determined graphically by trial and error; moreover, its coordinates can be calculated from equation (3) according to

$$\sigma_r = \left(\frac{\zeta}{2\gamma - 1}\right)^{\frac{1}{\gamma}} \tag{6}$$

and

$$\epsilon_r = \frac{1}{2\gamma - 1} \tag{6a}$$

With the help of equation (4), the associated values of ω and $u_r = \omega r_0 (1 + \epsilon_r)$ can now be established.

In previous considerations, it has been tacitly implied, through use of equation (2), that the deformation of the ring is uniform in the circumferential direction. If and how far this uniformity exists or when a local deformation, a necking of the rotating ring, can set in as a consequence of the nature of the loading remains to be investigated. The beginning of local deformation can therefore be characterized in such a manner that a very short arc length x of the ring is strained by $\epsilon + d\epsilon$; whereas the rest of the ring remains strained only by ϵ. The additional strain $d\epsilon$ of this small arc length would increase the radius to the center of gravity of all the cross sections of the ring and would therefore increase the tangential loading; simultaneously, however, the material of the necking-arc element hardens in comparison with the rest of the ring. The local deformation can therefore arise only in those cases if the unit of area, reduced by $\frac{1 + \epsilon}{1 + \epsilon + d\epsilon}$ at the necked position in spite of the hardening caused by the associated deformation, is smaller in load capacity than the unit of cross-sectional area of the nonnecked ring segment, which is strained only by ϵ. The former tangential cross-sectional loading $\sigma = \mu\omega^2 r^2 = \mu\omega^2 r_0^2(1 + \epsilon)^2$ through the necking of the arc length x is increased to

$$\mu\omega^2 r_0^2 \left[(1 + \epsilon) + \frac{x d\epsilon}{2r\pi}\right]^2 \approx \sigma \left[1 + \frac{x d\epsilon}{(1 + \epsilon)\, r\pi}\right]$$

The load capacity of the necked ring element becomes

$$(\sigma + d\sigma) \frac{1 + \epsilon}{1 + \epsilon + d\epsilon} \approx (\sigma + d\sigma)\left(1 - \frac{d\epsilon}{1 + \epsilon}\right)$$

The necking is therefore possible only if the relations

$$\sigma \left[1 + \frac{x d\epsilon}{(1 + \epsilon)\, r\pi}\right] > (\sigma + d\sigma)\left(1 - \frac{d\epsilon}{1 + \epsilon}\right)$$

or

$$\frac{x}{\pi r} > \frac{d\sigma}{d\epsilon} \frac{1 + \epsilon}{\sigma} - 1$$

are satisfied. In any case, these relations should be valid for arbitrary small values of x and they must thus transform at the beginning of local deformation into the limit condition

$$\frac{d\sigma}{d\epsilon} \frac{1 + \epsilon}{\sigma} - 1 = 0$$

Consequently, the freely rotating ring can be sustained only to the point of beginning local deformation where $\frac{d\sigma}{d\epsilon} = \frac{\sigma}{1 + \epsilon}$, hence to the same point where the conventional tensile specimen begins necking.

3. Rotating disks. - A freely rotating disk of ductile material will be investigated next. In this case, equation (2) is

$$T = \int_{(F)} \sigma_t \, dF = \mu\omega^2 \int_{(F)} x^2 \, dF$$

If the instantaneous radius to the center of gravity is designated by r_s and the radius of gyration [NACA comment: About the center of gravity of the section shown in fig. 5] by r_p, then the previous equation transforms to

$$T = \mu\omega^2 F r_s^2 + \mu\omega^2 F r_p^2 \tag{7}$$

The instantaneous value of the tangential stress loading can therefore be considered as a function of the instantaneous (deforming) cross section

$$T = f(F) \tag{8}$$

In any case, if equation (8) is to be determined analytically obviously other variables such as ϵ or its equivalent must be used, that is, quantities that designate the true homogeneous specific deformation of small cross-sectional elements. The desired relation $T = f(F)$ would subsequently be obtained by integration over the entire cross section. Discussion of if and how this expression is to be obtained analytically is desirable, not assuming but hypothesizing that either the analytical expression or the graphical representation (fig. 4) is already available. In the at-rest condition, the disk should have the cross section F_0, which must be associated with the value of $T = 0$ in equation (8).

The following definitions are also introduced:

$$C' = \mu\omega^2 F r_s^2 \tag{9}$$

$$C'' = \mu\omega^2 F r_p^2 \tag{9a}$$

The expression of the dependence of T on ω and F is to be investigated immediately. The customary hypothesis that the material is incompressible $\frac{d\mu}{dF} = 0$ yields the equation

$$\frac{r_{s1}}{r_{s2}} = \frac{F_2}{F_1} \tag{10}$$

where subscripts 1 and 2 denote distinct associated values of r_s and F. From equations (9) and (10) directly follow

$$C' = \mu\omega^2 F_0 r_{s0}^2 \frac{F}{F_0} \left(\frac{F_0}{F}\right)^2 = C_0' \frac{F_0}{F} \tag{11}$$

The subscript 0 designates values that relate to the original measurements of the disk. With this equation, the first part of the dependence of T on ω and F has been expressed. If, however, C'' is sought for the second part, the emergence of the radius of gyration r_p presents no small difficulty. The radius of gyration is not only dependent upon the instantaneous size of the cross section but is also dependent upon the instantaneous form of the cross section. Thus, if the size and shape of the starting cross section are known, the value of C'' for a deforming section can be primarily determined through knowledge of the succession of shapes that the cross section assumes. This knowledge is to be determined possibly by either basic detailed strength and deformation calculations or with the help of suitable spin tests. An attempt, however, could still be made to take the possible variation of C'' in its dependence on F into consideration through determination of the probable upper and lower limits. For this purpose, a disk of uniform thickness (fig. 5) will be considered as a symbolic case. Figure 5 exhibits the disk cross section with initial dimensions r_{s0}, b_0, h_0, $F_0 = b_0 h_0$ and also shows the deformed disk with dimensions r_s, b, h, $F = bh$. With these symbolic considerations, the assumption is further made that in the deformed condition, the disk remains of axially uniform length. Then, however,

$$C'' = \mu\omega^2 F \frac{h^2}{12}$$

Furthermore,

$$C'' = \mu\omega^2 F_0 \frac{h_0^2}{12} \frac{F}{F_0} \left(\frac{h}{h_0}\right)^2 = C_0'' \frac{F}{F_0} \left(\frac{h}{h_0}\right)^2$$

With consideration of equation (10)

$$r_{s0}\ b_0\ h_0 = r_s\ bh \quad \text{and} \quad \frac{h}{h_0} = \frac{r_{s0}}{r_s}\frac{b_0}{b} = \frac{F}{F_0}\frac{b_0}{b}$$

The case where the hypothetical cross-sectional decrease occurs with unchanging width $b_0/b = 1$ can be considered as the lower limit and the case where the deformation occurs with unchanging height $b_0/b = F_0/F$ can be considered as the upper limit. From these relations it follows that

$$C_{min}'' = C_0'' \left(\frac{F}{F_0}\right)^3 \tag{12}$$

and

$$C_{max}'' = C_0'' \frac{F}{F_0} \tag{12a}$$

are the lower and upper limits, respectively.

In order to provide an approximate picture of the range of limits expressed by percent, a calculation is made with the following assumed values:

F_0 = 210 square centimeters h_0 = 70 centimeters r_{s0} = 35 centimeters

γ = 0.00785 kilogram per cubic centimeter ω = 314 F/F_0 = 0.9

From this assumption is determined:

C_0' = 203,000 kilograms, C_0'' = 67,700 kilograms, and $C_0' + C_0''$ = 270,700 kilograms. For the value of $T = C' + C''$, 274,910 kilograms is obtained as the lower limiting value from equations (11) and (12) and 286,480 kilograms is obtained as the upper limiting value from equations (11) and (12a). The range of limits thus includes about $4\frac{1}{4}$ percent of the lower value of T. With the deformation rate of F/F_0 assumed as 0.9, this range of limits must be regarded as rather large. Closer bounds on the range of limits could easily be attained in given cases on the basis of spin tests or deformation calculations conducted for similar disks.

This question will be pursued no further but instead equations (11) and (12) will be joined in a generalized form

$$T = C_0' \, F_0/F + C_0'' \, (F/F_0)^k \tag{13}$$

where the value of k may well be a function of the size of the instantaneous cross section but in the course of the entire deformation k will, in all probability, lie between 1 and 3. Associated values of T, F, and ω could then be determined first if, in equation (8) as well as equation (13), the dependence on F is graphically or mathematically exhibited.

It is desired to determine conveniently the instability point of a freely spinning disk from equation (13). Instead of the sequence of calculations applied to the ring, those calculations shall be used that consider the stipulation $\frac{d\omega}{d\epsilon} = 0$ or for disks $\frac{d\omega}{dF} = 0$, as direct indications of instability. If the derivative of equation (13) is formed with respect to F under the assumptions that $\frac{d\omega}{dF} = 0$ and k = constant the resulting equation is

$$\frac{dT}{dF} = - C_0' \, F_0/F^2 + k \, C_0'' \, \frac{F^{k-1}}{F_0{}^k} = - 1/F \, (C' - kC'')$$

or

$$\frac{dT}{dF} = - 1/F \, [T - (k + 1) \, C''] \tag{14}$$

In one case, this equation yields the analytical and in other cases the graphical determination of the instability point. Although the instability point can be graphically obtained from the intersection of the curves dT/dF and $- 1/F \, [T - (k + 1) \, C'']$, the following procedure yields the result still more rapidly. The curve of $T - (k + 1) \, C''$ plotted against F is calculated and drawn. Next, the abscissa F is ascertained with which the associated tangent to the T curve and the radius vector (drawn from the origin of coordinates) to the $T - (k + 1) \, C''$ curve form complimentary angles with the positive direction of the axis of abscissas.

It is also of interest to determine the instability point of a freely rotating ring in the coordinate system T, F obtained from the relation

$$\frac{dT}{dF} = - \frac{T}{F} \tag{15}$$

which implies that at the point referred to the subtangent is equal to the ordinate. [NACA comment: Actually abscissa.] Equation (14) would also transform to this same form if C" could be neglected in comparison with C'. This neglect is obviously never permissible because the neglect is allowable only for rings. If, however, easy ascertainment of the instability point of a freely rotating disk from equation (15) is desired, too large a value of F would be obtained. The region of unstable rotation thus appears to begin with a smaller deformation than that which is the case with the correct determination according to equation (14). One hypothesis naturally contains this last assertion, namely, that the value of k is greater than -1. This assertion will always prove correct in practice. If, in one way or another, curve $T = f(F)$ is thus graphically obtained for a freely spinning disk, the lower limiting value of the instability point could be determined most quickly from equation (15). 872

As was already accomplished for rotating rings, it is possible to show with similar reasoning that the necking of the disk first begins at the point where $\frac{dT}{dF} = 0$ therefore where the T curve has a horizontal tangent. This point of the T curve corresponds to the necking point of the tensile test because the curve $T = f(F)$ is essentially similar to that of σ_a.

The instability point naturally occurs with a smaller deformation in a spinning disk that is under the influence of centrifugal rim loading than in a freely rotating disk. This occurrence is also valid for rings. The pursuance of these cases, although easy to carry through for each, will be discontinued at this point.

4. Unstable region of rotation. - No consideration has been made in the preceding discussion of the velocity of deformation. Experimental measurement of the velocity of deformation is largely related to the tensile test. The stress-strain curve of figure 2, as far as it considers a numerical evaluation, is intrinsically related to the usual strain velocity by rupture tests. The curve could lie somewhat lower with an infinitely slow velocity of deformation. Suitable investigations, however, have proved that the effect of the usual rupture velocity in the material test for steel and iron is so unimportant that these curves can be considered as the stress-strain curve of the infinitely slow deformation with little error.

For the sake of simplicity, a freely spinning ring is considered. Subsequently, the reasoning can also be significantly applied to other spinning bodies. The ring attains the instability point $\sigma_r = \mu\omega^2 r_0^2 (1 + \epsilon_r)^2$ with very little deformation velocity

at the angular velocity corresponding to the maximum point of the ω curve (fig. 2). The previous mathematical analysis has furnished the proof that, if the angular velocity remains unchanged, the ring deforms further – in contrast to the stable deformation range where this would be possible only by increasing the revolutions. In general, the angular velocity will also be considered as a variable in calculation and as a function of time

$$\omega^2 = f_1\ (t) \tag{16}$$

872

If the deformation proceeds with appreciable and variable velocity, it must also be considered in relation to the time; for example,

$$\epsilon = f_2\ (t) \tag{17}$$

If calculation according to the preceding discussion is desired, consideration of the so-called dynamic stress σ_d and not the stress σ normally calculated from rupture tests would be necessary. The dynamic stress is larger than the static strength of the material. The familiar characteristic of materials, which stipulates apparently higher deformation loads with increasing velocity, proves that. The dynamic stress is not only dependent upon the specific strain but is also dependent upon the instantaneous strain velocity $\frac{d\epsilon}{dt}$

$$\sigma_d = f_3\left(\epsilon, \frac{d\epsilon}{dt}\right) \tag{18}$$

The tangential cross-sectional loading also involves an additional force, which, evoked by the centrifugal acceleration of the ring, opposes the centrifugal force, and for the unit cross section is equal to[3]

$$-\ \mu r\ \frac{d^2r}{dt^2} = -\ \mu r_0{}^2\ (1 + \epsilon)\ \frac{d^2\epsilon}{dt^2}$$

The dynamic equilibrium condition of a freely spinning ring is consequently

$$\sigma_d = \mu\omega^2\ r_0{}^2\ (1 + \epsilon)^2 - \mu r_0{}^2\ (1 + \epsilon)\ \frac{d^2\epsilon}{dt^2}$$

or

$$f_3\left(\epsilon, \frac{d\epsilon}{dt}\right) = \mu r_0{}^2\ (1 + \epsilon)^2\ f_1(t) - \mu r_0{}^2\ (1 + \epsilon)\ \frac{d^2\epsilon}{dt^2} \tag{19}$$

---

[3]Presumably this term would usually be comparatively small in practical cases, which, however, will not be considered here.

The relation $\sigma_d = f_3 \left(\epsilon, \frac{d\epsilon}{dt}\right)$ must be ascertained for the given material by means of dynamic rupture tests. Equation (19) then enables either the calculation for given assumptions of $\epsilon = f_2 (t)$, which thereby stipulates $\omega^2 = f_1 (t)$ or inversely and finally for any desired associated values of ϵ, ω, and σ_d.

Investigations concerning dynamic stresses are often conducted for various materials. Ludwik (reference 4, pp. 44 to 53) ran tests on tin wires and established the form of the velocity curve (ordinate, dynamic stress; abscissa, effective strain velocity $\frac{d\eta}{dt}$, where $d\eta = \frac{d\epsilon}{1 + \epsilon}$) as logarithmic with uniform specific strain ϵ = constant. 872

Plank (reference 5) conducted dynamic rupture tests with low-carbon steel. Simultaneous values of σ_d, ϵ, and $\frac{d\epsilon}{dt}$ could readily be determined from his measurements. Unfortunately, these measurements were analyzed from another point of view and only the evaluation, not the diagrams, were published. Plank maintained that the dynamic stress in the elastic region of deformation, below a certain velocity of deformation, progressed proportionately to the velocity of deformation but inferred, however, possibly with consideration of the results of Ludwik, that in the region of permanent deformation this relation can in no case be proportional. It is recognized that if tensile specimens of the same material are ruptured with distinct but in each case uniform deformation velocities, distinct stress-strain curves are obtained that, for given abscissas ϵ, would possess higher ordinates σ_d the greater the deformation velocities. With certain assumptions, the ordinary stress-strain curve may be considered as a datum curve, which accordingly would lie at the lowest position. In general, it cannot be predicted if and how much the deformation limit of the material, thus in one instance the uniform strain and in the other the rupture strain of the material, will be influenced by the deformation velocity. The specific characteristics of the materials are of accompanying importance.

Some stress-strain curves have been included in figure 6 that correspond to the increasing but otherwise uniform strain velocities v_0, v_1, v_2, and v_3, where $v = \frac{d\epsilon}{dt}$, and moreover, the ω curve corresponding to v_0, σ_0 has been included. If the ring has attained the instability point with the normally extremely small stretch velocity v_0 and its angular velocity remains unchanged or increases or even, as will be shown, is decreased in a special

manner, the stretch velocity increases continuously according to equation (19). The question arises as to if and how the stretch velocity can be best controlled at all times.

The assumption is made that the ring attains a specific strain ϵ' after a certain unknown deformation path in the unstable deformation region with an angular velocity ω_d', a deformation velocity v', and a dynamic stress σ_d' (fig. 6). Obviously, these four values should satisfy equation (19). If reduction or even complete annulment of the deformation velocity is desired, it is best accomplished by the sudden reduction of the angular velocity. If, for example, the angular velocity is reduced from ω_d' to ω'', equations (3) and (4) result in a negative tangential "overbalanced force", which is only to be explained in that no further deformation is therefore possible. The deformation condition is transformed to an elastic one, namely, through reduction of the stress in the ring material to σ'', that is, material the yield point of which had previously been raised to $\sigma' > \sigma''$. The actual process differs from this process because the centrifugal kinetic energy of the ring material is not annulled by the sudden reduction of the angular velocity. In calculations, therefore, the second member of the right side of equation (19) is to be made positive and the deformation velocity and dynamic stress will diminish with a certain retardation to 0 and to σ'', respectively. This retardation and the increase in ϵ' caused thereby can well be disregarded in practical cases. If the goal were only the reduction of the strain velocity, the angular velocity would later be increased from ω'' to ω' (fig. 6), where the deformation would again begin with velocity increasing from 0.

Thus it is to be observed whether through suitable variation of the angular velocity, which naturally corresponds to varying the tangential cross-sectional load, the deformation velocity and thereby the entire region of rotational instability can be controlled. These deliberations clarify the meaning of the angular-velocity curve, which appertains to zero deformation velocity in the unstable plastic-flow region. This curve specifies those values of ω with the associated strain of the deforming ring that one must stay below in order that deformation of the ring be increased in the unstable region of spinning.

It is quite obvious that the descriptions of events or analyses have complete validity for disks of arbitrary contour.

5. Necking region. - A disk tends toward local deformation in the necking region of rotation. The process occurs independently of the characteristics of the unstable region of rotation.

If achievement of commercial advantages is attempted in specified cases through plastic deformation, the limit of applicability of the process is determined by the occurrence of necking. One reason for investigating the process of rotational deformation in the region of necking is the determination of if and how a uniform deformation can be attained in the circumferential direction. Moreover, possibilities of such an attainment exist. It is contemplated, for example, that a ring will be spun on a right circular cone, the external surface of which is finely grooved in the axial direction. If the ring material is quite soft and ductile, the grooves would be loosened somewhat at the inner surface with the attainment of the necking point. Before spinning, however, the same effect could be produced by so pressing the ring on the cone that the tangential surface friction, increased by this means, would set a certain obstruction in the way of the beginning of local deformation. Similar externally affected mechanical expedients could well be variously applied. In other cases, there are materials for which a suitable deformation velocity influences the course of the tensile test in such a manner that the test bar is allowed to stretch uniformly in other necking regions along its entire length. There are familiar materials, the internal frictional resistance of which is strongly augmented by increasing deformation velocity and that, moreover, in consequence of cold deformation, are hardened very little or not at all (reference 4, p. 40). These materials to which presumably steel and iron are also to be added at certain incandescent temperatures could thus be uniformly deformed even in the necking region of spinning with appropriate deformation velocities.

In order to understand correctly the spin process in the region of necking, a preliminary statement should be made about the necking region in an ordinary tensile test. In regard to this situation, it should be recalled that figure 2, where the stress-strain curve was introduced only in the stable and unstable regions and therefore up to the necking point, is in contrast with figure 4 where the path of the tangential stress loading in the region of necking has also been characterized. The continuation of the curve would thereby ordinarily be determined by plotting the instantaneous tensile load on the necking specimen and calculating the associated specific strain from the measured contraction of the cross section. This method, however, arouses many questions. The stress-strain curve of the tensile test corresponds in its path up to the necking point (the effect of the grip is neglected) to a uniaxial stress condition. This characteristic is of great importance and it would be desirable if it also

characterized the path of the curve in the necking region. However, the exterior surface of the necked portion of the bar, which is free from surface forces, is conically bounded and consequently large radial components σ_r must appear in addition to the stress component σ parallel to the axis (fig. 7), so long as the cross-contraction coefficient of the material is not infinitely large.

For example, with soft, low-carbon steel, values of σ_r/σ over 0.3 are ascertained. These values, however, evoke a triaxial stress distribution in the necked test bar, the neglect of which is hardly permissible. The radial stresses stipulate an essentially uneven distribution of axial stresses over the cross section. From this distribution, it is evident that individual circular strips of the necking section have undergone different specific strains. Thus the possibility exists that the earlier cross sections, except for the section at rupture, also may not be plane and must be calculated according to the significant shear stresses. The specific strain stipulated by the contraction of the rupture section is a relatively fictitious value over the entire rupture section in every case and, in reality, can be correlated for only a small, undetermined, cross-sectional ring strip the same as the true fracture stresses, which are obtained in the usual manner. That both of these values are associated with the same ring strip appears to be, in general, of the highest improbability. In reference to this condition, no notice will be taken of the metallographic consequences; they already fall outside the scope of this work. As long as the "static" and "dynamic" stress-strain curves for the necking region of the tensile test are not ascertained with undisputable accuracy for a "necking-free" deformation path, the deformation due to rotation in the necking region can be only qualitatively followed for rings.

The case of spinning in the necking range, in which the uniform deformation in the circumferential direction is effected through externally used mechanical methods will not be examined any closer. That which has been said for the unstable region remains entirely valid for this case. The situation is different if adjustment of the uniformity of the deformation by means of suitable deformation velocities is desired. In these cases there is, in general, a critical deformation velocity for each deformation gradient that cannot be reduced without the body beginning to neck; these deformation velocities can be ascertained through suitable tests. Thus, as in the unstable region of spinning, the deformation velocity may not be arbitrarily reduced but with its lowered limit carefully regarded, a region equivalent to a zone of positive danger must be passed over in all possible haste, with the

iniation as well as with the interruption of deformation. In other respects, everything that was developed for the unstable range of rotation is also valid for this case.

In this respect, it is desired to present a rigorous interpretation of the necking branch of the tangential-stress-loading curve characterized in figure 4. This branch exhibits those values of the tangential cross-sectional loading that must be reduced in order to transform the deformation state of the disk, which previously had been arbitrarily deformed without necking to the subject cross section, to an elastic state; that is, the plastic deformation is thereby increased. At least, the same tangential loadings must be used when repeated introduction of plastic deformation is desired.

The equivalent interpretation for rings in the necking region would have the extrapolation, which was not drawn in, of the true stress curve, which, as already said, must correspond to the path of an imaginary necking-free tensile test with very little strain velocity.

In addition, an important situation will be emphasized at this point. In all the reasoning concerning the deformation due to rotation in the necking region, certain assumptions are implied, namely, that the use of a deformation velocity corresponding to a uniform deformation is really possible. This assumption could break down under conditions such that these deformation velocities evoke a premature fracture that could completely exclude, or significantly limit, this region of deformation. Naturally, this possibility must be investigated for individual materials case by case and also the possibility must be investigated of whether the danger zone of deformation velocities can be passed through so quickly with the initiation or interruption of deformation that practically no further necking occurs.

6. Technological considerations. - Rotation[4] in the range of permanent deformation could, for example, serve the exclusive purpose of fabrication. Plastic materials would come into consideration, which principally or preponderantly could hardly be said to have a deformation limit in the usual sense.

[4]The autofrettage of gun barrels (reference 3, p. 282) proceeds with similar phenomena. However, the length of the mathematical treatment would be halved. The subsequent expositions are also naturally valid for this closely related problem.

872

A ring of purely plastic material, which does not strain-harden in consequence of the permanent deformation, is considered. The path of the tangential stress load in the F-T diagram will be characterized by a straight line through the origin of coordinates (T_{pl} line in fig. 4). In addition, plastic materials tend toward incipient necking with slowly applied tensile stress. This characteristic is also expressed by the T_{pl} line, in which the familiar characteristic of the deformation path in the necking region $\frac{dT}{dF} > 0$ of the T_{pl} line is satisfied by a constant value. That which has already been said for the necking region is therefore valid in the same sense for plastic materials through which the correct interpretation of the T_{pl} line is also given. In practice, the forming of rings or other bodies of revolution has an essential role. Only analogous hot-forged, structural elements are contemplated. The earlier deliberations concerning the necking region arise quite importantly with respect to the spin forming of plastic materials.

Ductile materials, which harden with cold deformation, extend, in general, through all three deformation regions. In contrast to materials of perfect plasticity, suitable consideration must be given to the permissible deformation limit of these materials. In any case it should be emphasized that, so far as the forming of ductile materials by spinning exclusively is considered, the deformation limit can be extended as desired by repeated annealing.

The spin-working must be considered, on the other hand, in the cold hardening of materials. In this respect, spin-working is only specially suited to ductile materials, the strain limit of which can be substantially raised by cold-working. Only copper and the austenitic steels are contemplated as examples. In this case, the question of the permissible degree of deformation first arises. The rupture strength forms the upper limit of every cold-work process and simultaneously coincides with the highest value of the cold-strengthening. In practice, the danger of rupture can hardly form the immediate limit of spin-working. Whenever the rupture point also coincides with the maximum raising of the strain limit, many other characteristic qualities, such as the magnitude of the strain, the contraction, and the notch toughness, come into consideration in addition to the tensile strength in evaluation for design applications. These characteristics of the material are in a certain sense inverse functions of the strain limit in that they increase or decrease at the sacrifice or utilization of the strain limit, respectively. In each case, increase of the tensile strength must be correctly adjusted in consideration of the practically permissible reduction in ductility. The ductility

becomes zero at the instant of fracture. Under certain circumstances there is still another phenomenon, namely aging, to be considered in connection with the ductility characteristic. Aging exists in that ductile materials, which already have had the yield point raised by cold deformation, have the yield point further slowly raised by a stress-free recrystallization [NACA comment: Carbide precipitation] at the cost of the ductility existing immediately after the cold-straining. Reference is only made to the work of F. Körber and A. Dreyer (reference 6), which contains a large bibliography. Aging results in the range of validity and the object of a strength and deformation calculation for each method of cold-working, being limited to the duration of the aging and the determination of the necessary force required, respectively. The later strength characteristic of the material, which for its moderately worked applications is alone decisive, could then be established only through suitable individual aging tests. 872

Taken basically, the preliminary calculation of a spin process under certain conditions is rather unnecessary. If, for example, a disk of ductile material is spun, the singular point of equation (7) in the stable region can easily be calculated or determined from associated data on the angular velocity, the size, and shape of the cross section, and the rim loading. The unstable deformation region is to be observed through the increase in deformation velocity with constant angular velocity. The deformation velocity would be controlled with familiar means, the continuation of the curve in the unstable flow region also determined, and the stated measurements accomplished with repeated stopping and starting of the deformation. Insofar as there is an especial interest in it, the instability point can afterwards be accurately ascertained on the basis of the curve obtained in this manner.

In conclusion it is mentioned that, in cases where cold hardening is the object of spinning, the consideration and practical use of the simultaneous deformation would be an obvious matter.

If and for what purpose and with what manner of materials the spinning or overpressing can be advantageously applied as a method of fabrication possibly will be decided by the future.

Translated by Arthur G. Holms
National Advisory Committee
for Aeronautics.

REFERENCES

1. Lasche, O.: Konstruktion und Material im Bau von Dampfturbinen und Turbodynamos. Julius Springer (Berlin), 2d, aufl., 1921, Ss. 13-21.

2. Stodola, A.: Die Dampf- und Gasturbine. Julius Springer (Berlin), 1922, S. 893.

3. Krüger: Untersuchungen über die Anstrengung dickwandiger Hohlzylinder unter Innendruck. Forschungsarbeiten, Heft 87, Kommissionsverlag, 1910.

4. Ludwik, P.: Elemente der technologischen Mechanik. Julius Springer (Berlin), 1903.

5. Plank, R.: Betrachtungen über dynamische Zugbeanspruchungen. Forschungsarbeiten, Heft 133, 1913.

6. Körber, F., and Dreyer, A.: Ueber Blaubrüchigkeit und Altern des Eisens. Mitteilungen aus dem Kaiser-Wilhelm-Institut für eisenforschung, Bd. 1921, Stahleisen, m.b.H., Düsseldorf.

872

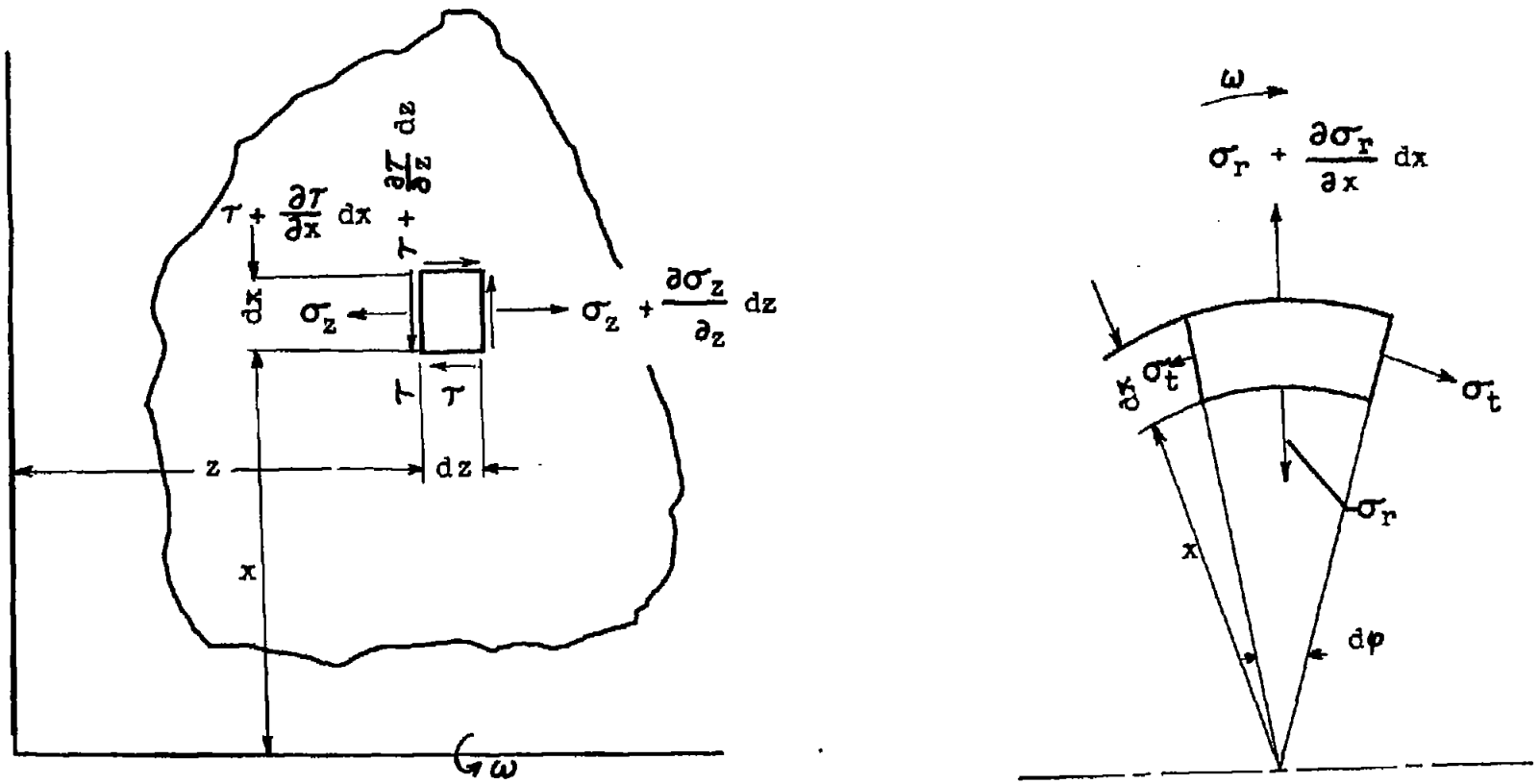

Figure 1. - Rotating-disk stresses.

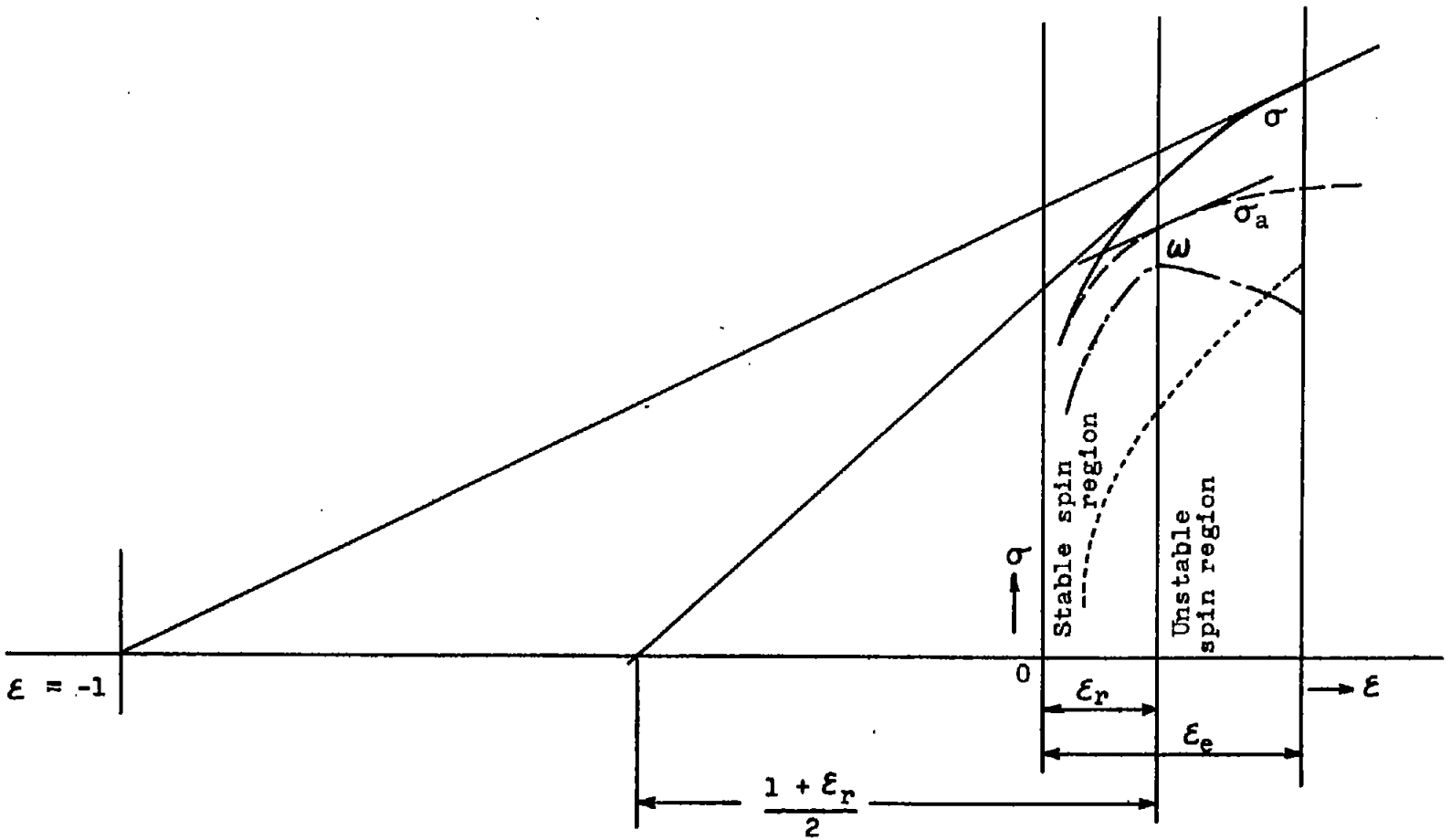

Figure 2. - Rotating ring in region of permanent deformation.

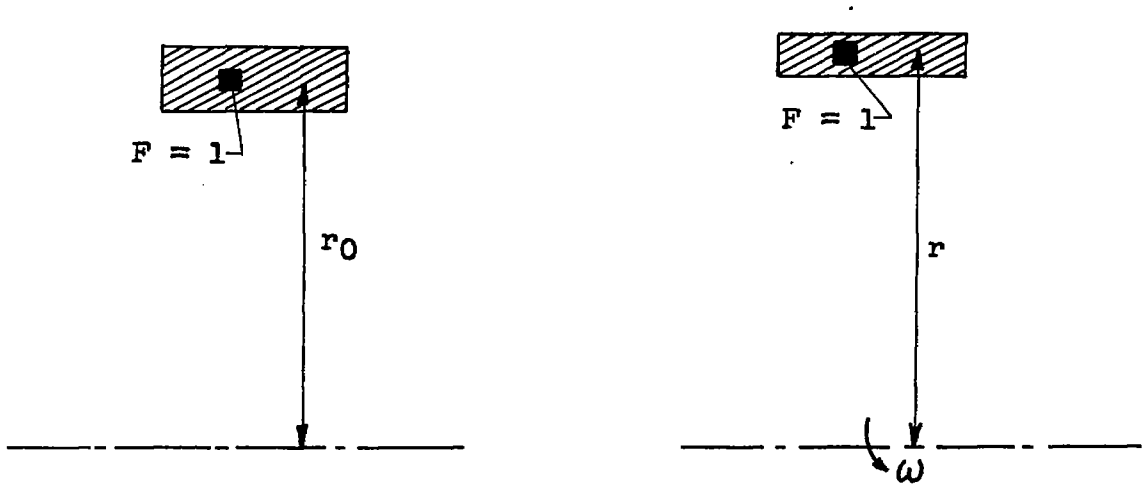

Figure 3. - Rotating ring before and after stretching.

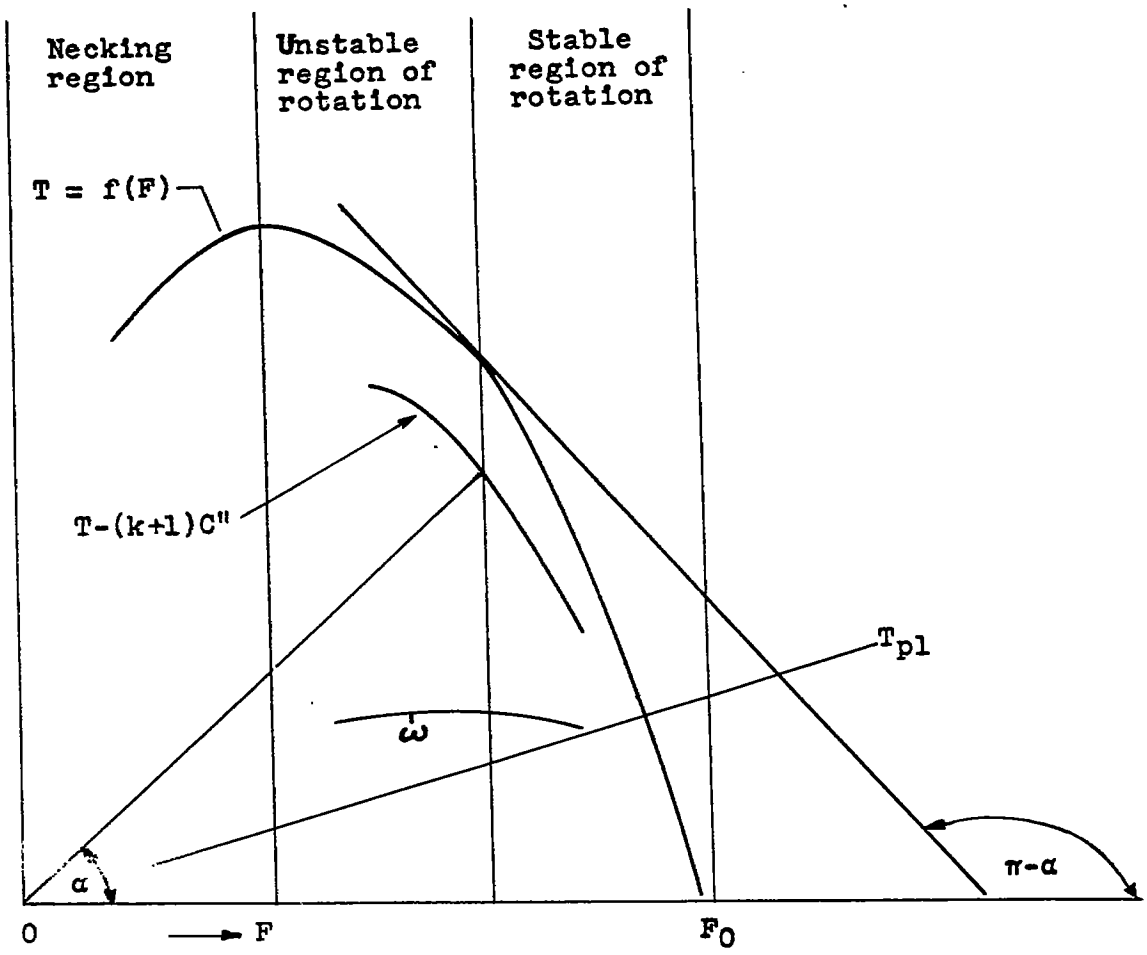

Figure 4. - Rotating bodies of revolution in region of plastic deformation.

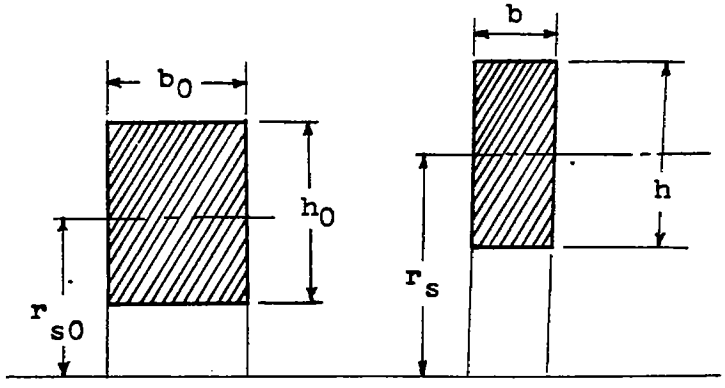

Figure 5. - Rotating disks before and after permanent deformation.

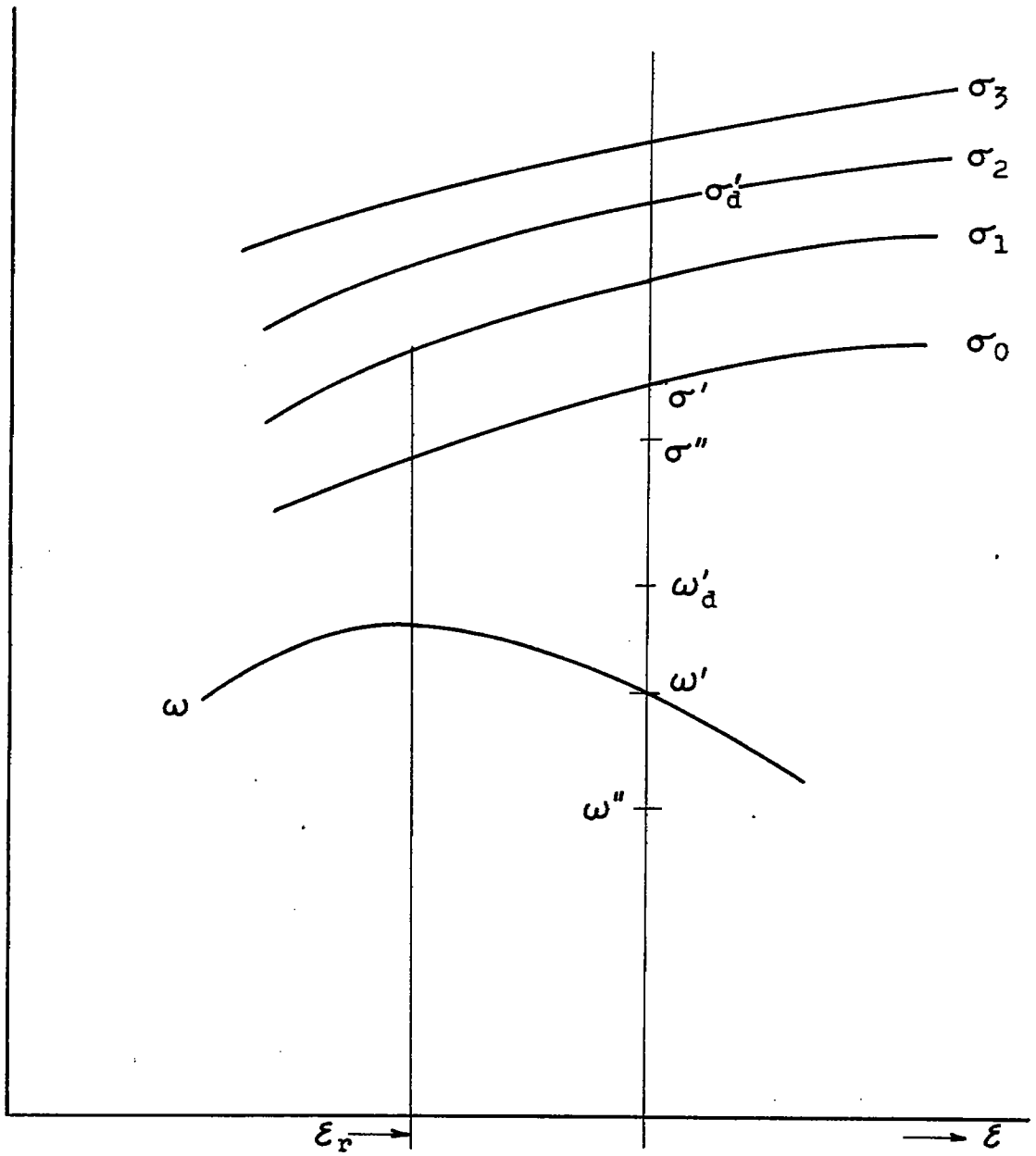

Figure 6. - Rotating rings in unstable region of rotation.

872

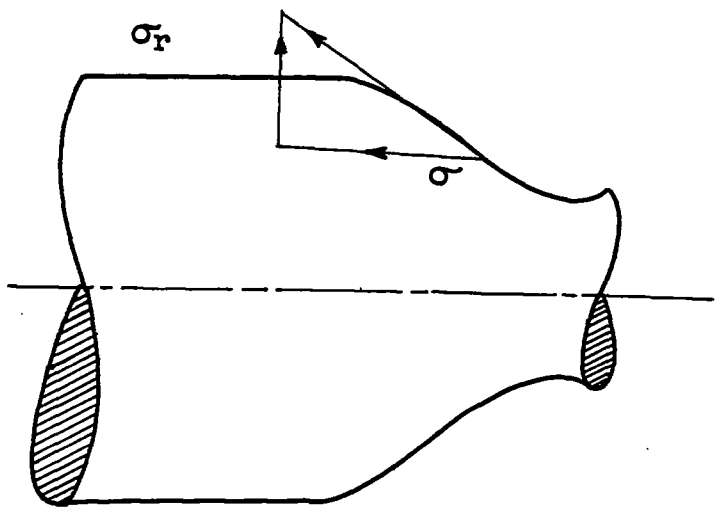

Figure 7. - Necked tensile specimen.