NACA TM No. 1195

7860

TECH LIBRARY KAFB, NM
0144777

NATIONAL ADVISORY COMMITTEE FOR AERONAUTICS

TECHNICAL MEMORANDUM

No. 1195

ON THE SOUND FIELD OF A ROTATING PROPELLER

By L. Gutin

Translation of "Über das Schallfeld einer rotierenden Luftschraube"
Physikalische Zeitschrift der Sowjetunion, Band 9, Heft 1, 1936

Langley Aeronautical Laboratory
Langley Field, Va.

Washington

October 1948

AFMDC
TECHNICAL LIBRARY
AFL 2811

TECH LIBRARY KAFB, NM

0144777

NATIONAL ADVISORY COMMITTEE FOR AERONAUTICS

TECHNICAL MEMORANDUM NO. 1195

ON THE SOUND FIELD OF A ROTATING PROPELLER*

By L. Gutin

The sound field of a rotating propeller is treated theoretically on the basis of aerodynamic principles. For the lower harmonics, the directional characteristics and the radiated sound energy are determined and are in conformity with existing experimental results.

1. INTRODUCTION

A rotating propeller produces periodic disturbances of the medium which cause a sound of low frequency. The fundamental tone of this sound equals the product of the number of blades and the number of revolutions per unit time, since each spatial configuration of the propeller is repeated with exactly the same frequency. The present work aims at a theoretical investigation of the sound field produced by the propeller. First a short report on earlier investigations in this field will be given.

The directional properties of propeller sound were first investigated theoretically by Lynam and Webb.[1] They suggested two hypotheses on the acoustic action of the propeller. Both hypotheses were based on actually arbitrary assumptions and led to directional characteristics (cf. figs. 1 and 2) which are not in agreement with the observed ones (cf. figs. 3 and 4).

Hart[2] attempted to develop a theory which was supposed to be free of arbitrary assumptions; however, he tacitly made the same assumption as Lynam and Webb in their second hypothesis: namely, that each

---

*"Über das Schallfeld einer rotierenden Luftschraube." Physikalische Zeitschrift der Sowjetunion, Band 9, Heft 1, 1936, pp. 57-71.

[1]Lynam, E. J. and Webb, H. A.: The Emission of Sound by Airscrews, R. & M. No. 624, 1919. (The theories of Lynam and Webb are known to us only through the treatment of Paris and Kemp since the original report was unfortunately not accessible.)

[2]Hart, M. D.: The Aeroplane as a Source of Sound. R. & M. No. 1310, 1929.

disturbed element in the propeller plane acts as a simple nondirectional source; accordingly, he obtained the same result.

Experimental investigations were undertaken by Paris[3] and Kemp[4]. Both experimented with a two-blade propeller; its diameter was 4.5 meters, the number of revolutions 13.9 per second. It is true that a noticeable discrepancy exists between their results in quantitative respect; essentially, however, they agree. Both directional characteristics show an asymmetry with respect to the rotational plane, a principal maximum at about $\vartheta = 115^{\circ}$, and a secondary maximum at $\vartheta = 40^{\circ}$. This peculiar asymmetry contradicts both hypotheses by Lynam and Webb.

Paris obtained, by a combination of the two hypotheses, a directional characteristic (cf. fig. 6) which reproduces the main outlines of the experimental curves; however, his method lacks physical foundation, and the number of arbitrary assumptions is too large.

The hypotheses mentioned above did not yield any information on the sound output of the propeller. This problem was experimentally examined by Kemp. He obtained the values 17.8 watts for the first harmonic and 7.4 watts for the second.[5]

In the following, a theory based on aerodynamic principles shall be developed, which determines quantitatively the sound field of a propeller.

2. SOME AERODYNAMIC RESULTS

A few facts concerning the action of the propeller, which are known from aerodynamics, shall be briefly quoted.[6]

The cross section of a propeller blade looks very similar to that of a wing (cf. fig. 7); the action of the propeller is based on this fact. Motion of a wing element relative to the medium causes, exactly as for a wing, a pressure increase on the concave side and

---

[3] Paris, E. T., Phil. Mag. vol. 13, no. 99, 1932.

[4] Kemp, S. F., Proc. Physical Soc. (London), vol. 44, pt. 2, p. 151.

[5] In the report by Kemp values half as large as these are given by mistake. Compare Paris, E. T., Phil. Mag. vol. 16, no. 60, 1933.

[6] Compare with this paragraph Mises, R. V.: The Theory of Flight, pp. 116-121.

a pressure decrease on the convex side. The resultant air force may be separated into two components of which one has the direction of the propeller axis and indeed is a thrust in the direction of the forward motion; the other one is opposed to the rotation and represents a drag force. The thrust forces of single elements add up to the total thrust force of the propeller, the drag forces result in a torque opposed to the torque of the motor.

A few important quantitative results which will be used subsequently are derived from the so-called momentum theory of the propeller. The propeller is assumed to be at rest and the air moving towards it from the front, opposed to the flight direction, with the velocity V. The effect of the propeller then consists in an acceleration of the approaching mass of air which finally assumes at a certain distance behind the propeller the velocity $V + w$. Let ρ be the density of the medium, P the magnitude of the thrust force, S the area described by the propeller, W the power supplied to the propeller, $W\eta$ the part of the power converted into translational energy. Then the following relations hold:

$$P = \rho S \left(V + \frac{w}{2}\right) w$$

$$W\eta = \rho S \left(V + \frac{w}{2}\right)^2 w$$

By eliminating w from both equations one obtains an expression for the dependence of the thrust on the power. For static conditions $(V = 0)$ there results:

$$P = \sqrt[3]{2\rho S W^2 \eta^2} \tag{1}$$

The obvious relation

$$M = \frac{W}{\alpha} \tag{2}$$

shall be mentioned. (M = torque of the motor, α = angular velocity of the rotation.)

3. DISTURBANCE FORCES IN THE PROPELLER PLANE

Two forces act on each element of the propeller: a thrust and a drag force. From the well-known theorem of mechanics, it follows that each element exerts forces of equal magnitude and in the opposite direction upon the medium. The points of application of these forces may be imagined concentrated in one plane since the axial dimensions of the propeller are very small in comparison with the wave lengths of the first harmonics; this plane is subsequently denoted as the plane of rotation.

A propeller element will be considered, the distance of which from the axis equals R; let dR be its radial length, a its width, measured in the projection on the rotational plane. Let the forces exerted upon the medium by the element be $A(R)\,dR$ (in the direction of the axis, opposed to the flight direction) and $B(R)\,dR$ (in the direction of the rotation).

It is clear that

$$n\int_0^{R_0} A(R)\,dR = \int_0^{R_0} dP = P$$

$$n\int_0^{R_0} B(R)R\,dR = \int_0^{R_0} dM = M$$

n representing the number of blades, R_0 the length of the blade.

Let it first be assumed that the forces are uniformly distributed over the width of the element.

In the element $R\,dR\,d\theta$ of the rotational plane, forces $A(R)\,dR\frac{R\,d\theta}{a}$ and $B(R)\,dR\frac{R\,d\theta}{a}$ act on the medium during the time interval in which this element is covered by the projection of the propeller element. If the overlapping starts at the time $t = 0$, it will be ended at the time $t = \tau = \frac{a}{R\alpha}$, to return after $t = T = \frac{2\pi}{n\alpha}$. These periodical forces may be developed in Fourier series

$$F_1(t) = \begin{cases} A(R)\frac{R\,d\theta}{a}dR & (0 < t < \tau) \\ 0 \;.\;.\; & (\tau < t < T) \end{cases} = \sum_{m=1}^{\infty} A_m \cos\,(mn\alpha t - \epsilon_m) + A_0$$

$$F_2(t) = \begin{cases} B(R)\frac{R\,d\theta}{a}dR & (0 < t < \tau) \\ 0 \;.\;.\; & (\tau < t < T) \end{cases} = \sum_{m=1}^{\infty} B_m \cos\,(mn\alpha t - \eta_m) + B_0$$

One obtains

$$\left.\begin{aligned} A_m &= \frac{2}{m\pi}A(R)\frac{R}{a}\sin\left(m\pi\frac{\tau}{T}\right)dR\,d\theta \\ B_m &= \frac{2}{m\pi}B(R)\frac{R}{a}\sin\left(m\pi\frac{\tau}{T}\right)dR\,d\theta \end{aligned}\right\} \qquad (3)$$

In a second area element $R\,dR\,d\theta$, shifted with respect to the first by the angle θ in the rotational direction, there act periodical forces of the same magnitude but retarded by the time $\frac{\theta}{\alpha}$. The corresponding Fourier developments are

$$F_1\left(t - \frac{\theta}{\alpha}\right) = \sum_{m=1}^{\infty} A_m \cos\,(mn\alpha t - mn\theta - \epsilon_m) + A_0$$

$$F_2\left(t - \frac{\theta}{\alpha}\right) = \sum_{m=1}^{\infty} B_m \cos\,(mn\alpha t - mn\theta - \eta_m) + B_0$$

For the first harmonics $\frac{m\pi\tau}{T} = \frac{mna}{2R}$ is usually small (the blade parts lying close to the center where R is small are eliminated since they make almost no contribution to the air forces), and one may equate

$$\sin\left(\frac{m\pi\tau}{T}\right) = \left(\frac{m\pi\tau}{T}\right)$$

One then obtains

$$\left.\begin{aligned} A_m &= \frac{n}{\pi} A(R)\ dR\ d\theta \\ B_m &= \frac{n}{\pi} B(R)\ dR\ d\theta \end{aligned}\right\} \tag{4}$$

It shall be shown now that these expressions are valid also when the air forces are not uniformly distributed over the blade width. Using for instance for the distribution of thrust the relation

$$A(R)\ dR = \int_0^a A(R)\ dR\ f(s)\ \frac{ds}{a}$$

with

$$\int_0^a f(s)\ ds = a$$

(s is counted from the leading edge of the blade), one obtains for the Fourier coefficients the expression

$$A_m = \frac{2}{T} A(R) \frac{R}{a}\ dR\ d\theta \left| \int_0^T f\left(\frac{at}{T}\right) e^{-i2m\pi t/T}\ dt \right|$$

For the first harmonic

$$\left| \int_0^{\tau} f\left(\frac{at}{\tau}\right) e^{-i2m\pi t/T} \, dt \right| \cong \left| \int_0^{\tau} f\left(\frac{at}{\tau}\right) dt \right|^{7}$$

From $\int_0^a f(s) \, ds$ it follows that

$$\int_0^{\tau} f\left(\frac{at}{\tau}\right) dt = \tau$$

and hence

$$A_m = \frac{n}{\pi} A(R) \, dR \, d\theta$$

For ϵ_m one obtains

$$\epsilon_m = \text{arc tan} \frac{\int_0^{\tau} f\left(\frac{at}{\tau}\right) \sin 2m\pi \frac{t}{T} \, dt}{\int_0^{\tau} f\left(\frac{at}{\tau}\right) \cos 2m\pi \frac{t}{T} \, dt} < \text{arc tan} \frac{\sin 2m\pi \frac{\tau}{T}}{\cos 2m\pi \frac{\tau}{T}} = 2m\pi \frac{\tau}{T}$$

---

[7]A more accurate estimation gives $\left(\text{for } \frac{2m\pi\tau}{T} < \frac{\pi}{2}\right)$

$$\int_0^{\tau} f\left(\frac{at}{\tau}\right) dt \sqrt{\cos^2 2m\pi \frac{t_1}{T} + \sin^2 2m\pi \frac{t_2}{T}}$$

with t_1 and t_2, representing certain mean values. One can name distributions for which $t_1 \cong 0$ and $t_2 \cong \tau$, but for the distributions occurring in practice the difference between t_1 and t_2 is much smaller.

4. THE SOUND FIELD

The point of origin of coordinates is assumed at the propeller center, the y-axis and z-axis in the rotational plane (cf. fig. 8). The x-axis is assumed to coincide with the flight direction. In the rotational plane polar coordinates are introduced, with the polar angle being counted from the y-axis, in the direction of the rotation. Let it first be assumed that the rotation, observed from the flight direction, is counter clockwise. The forces acting on the medium in an element $R\,dR\,d\theta$ are (for the first harmonics)

$$\left.\begin{aligned} X &= -\frac{n}{\pi} A(R) e^{i(kct-mn\theta-\epsilon_m)}\, dR\, d\theta \\ Y &= -\frac{n}{\pi} B(R) \sin\theta\, e^{i(kct-mn\theta-\eta_m)}\, dR\, d\theta \\ Z &= \frac{n}{\pi} B(R) \cos\theta\, e^{i(kct-mn\theta-\eta_m)}\, dR\, d\theta \end{aligned}\right\} \qquad (5)$$

If one assumes, for reasons of simplification, that at the time $t = 0$ the center line of one of the blades coincides with the positive y-axis, ϵ_m and η_m will be at any rate smaller than $\frac{2m\pi T}{T}$, therefore small, at least for the lower harmonics.

The velocity potential produced by a concentrated force with the components X, Y, Z is[8]

$$\varphi = -\frac{1}{4\pi k\rho c}\left(X\frac{\partial}{\partial x} + Y\frac{\partial}{\partial y} + Z\frac{\partial}{\partial z}\right)\frac{e^{-ikr}}{r} \qquad (6)$$

---

[8] Compare Lamb, H.: Textbook of Hydrodynamics, Teubner 1931, p. 567. A concentrated force Fe^{ikct} is, therefore, equivalent to an acoustic double source of the strength $\frac{iF}{k\rho c}$.

If one inserts the expressions for the force components and notes that

$$\frac{\partial}{\partial x}\left(\frac{e^{-ikr}}{r}\right) = \frac{\partial}{\partial r}\left(\frac{e^{-ikr}}{r}\right)\cos\vartheta$$

$$\frac{\partial}{\partial y}\left(\frac{e^{-ikr}}{r}\right) = \frac{\partial}{\partial r}\left(\frac{e^{-ikr}}{r}\right)\cos\chi$$

$$\frac{\partial}{\partial z}\left(\frac{e^{-ikr}}{r}\right) = \frac{\partial}{\partial r}\left(\frac{e^{-ikr}}{r}\right)\cos\nu$$

(ϑ, χ, ν are the angles that the radius vector r makes with the axis), one obtains for the total velocity potential

$$\varphi = \frac{in}{4\pi^2\rho ck}\int_0^{R_0}\int_0^{2\pi}\Big[A(R)e^{i(kct-mn\theta-\epsilon_m)}\cos\vartheta$$

$$+ B(R)e^{i(kct-mn\theta-\eta_m)}(\cos\chi\sin\theta - \cos\nu\cos\theta)\Big]\frac{\partial}{\partial r}\left(\frac{e^{-ikr}}{r}\right)dR\,d\theta \quad (7)$$

The point at which the force acts is assumed to lie in the xy-plane which can always be attained by a suitable choice of the system of coordinates y,z in the rotational plane; let it further be assumed that r is large. Then it follows that:

$$\cos\chi = \sin\vartheta;\quad \cos\nu = 0$$

$$r = r_1 - R\cos\theta\sin\vartheta$$

$$\frac{\partial}{\partial r}\left(\frac{e^{-ikr}}{r}\right) \cong -ik\frac{e^{-ikr}}{r} \cong -ik\frac{e^{-ikr_1}}{r_1}\, e^{ikR \sin \vartheta \cos \theta}$$

After substituting into equation (7) and carrying out the integration with respect to θ one obtains

$$\varphi = -\frac{i^{mn}{}_n\, e^{ik(ct - r_1)}}{2\pi\rho c\, r_1} \int_0^{R_0} dR \left[A(R) e^{-i\epsilon_m} \cos \vartheta\, J_{mn}(kR \sin \vartheta) \right.$$

$$\left. - B(R) e^{-i\eta_m} \sin \vartheta\, \frac{J_{mn-1}(kR \sin \vartheta) + J_{mn+1}(kR \sin \vartheta)}{2} \right]$$

$$= -\frac{i^{mn}{}_n}{2\pi\rho c} \frac{e^{ik(ct - r_1)}}{r_1} \int_0^{R_0} \left[-A(R) e^{-i\epsilon_m} \cos \vartheta \right.$$

$$\left. + \frac{mn}{kR} B(R) e^{-i\eta_m} \right] J_{mn}(kR \sin \vartheta)\, dR \tag{8}$$

$$\left(\int_0^{2\pi} e^{iz \cos \varphi - im\varphi}\, d\varphi = 2\pi i^m J_m(z); \right.$$

J_m = Bessel function of the first kind of the mth order.)

One can easily satisfy oneself that the expression for φ remains unchanged in the case of opposite direction of rotation.

For the magnitude of the sound pressure amplitude there results

$$P = \rho\left|\frac{\partial\varphi}{\partial t}\right| = \frac{kn}{2\pi r}\left|\int_0^{R_0}\left[-A(R)e^{-i\epsilon_m}\cos\vartheta + \frac{mn}{kR}B(R)e^{-i\eta_m}\right]J_{mn}(kR\sin\vartheta)\,dR\right|$$

If one inserts

$$A(R)\,dR = \frac{dP}{n}$$

$$B(R)\,dR = \frac{dM}{nR}$$

$$k = \frac{m\omega_1}{c}$$

(ω_1 = circular frequency of the fundamental tone), P is

$$P = \frac{m\omega_1}{2\pi cr}\left|\int_0^{R_0}\left(\frac{dP}{dR}e^{-i\epsilon_m}\cos\vartheta + \frac{nc}{\omega_1 R^2}\frac{dM}{dR}e^{-i\eta_m}\right)J_{mn}(kR\sin\vartheta)\,dR\right| \quad (9)$$

The sound power may be calculated according to the formula

$$W = \int_0^{\pi}\frac{P^2}{2\rho c}2\pi r^2\sin\vartheta\,d\vartheta \quad (10)$$

In order to execute in equations (8) and (9), respectively, the integration with respect to R, one would have to know the distribution of the thrust and drag forces along the blade; it can be determined for instance from aerodynamic model tests. However, it is still possible to approximately evaluate the integrals if the aerodynamic data are

less detailed. Since ϵ_m and η_m are small and the Bessel functions occurring in the integrand may be regarded for the first harmonics as monotonically increasing with R it follows on the basis of the mean value theorem that:

$$P = \frac{m\omega_1}{2\pi cr}\left[-P \cos \vartheta \, J_{mn}(kR_1 \sin \vartheta) + \frac{ncM}{\omega_1 R_2{}^2} J_{mn}(kR_2 \sin \vartheta)\right] \tag{11}$$

R_1 and R_2 are certain mean values.

If the number of blades is small, one can, for the first harmonics, put R_1 and R_2 about equal to the radius R_c of the circumference on which runs the point of application of the resultant thrust force of a single blade. In most cases it equals about $0.7 - 0.75\ R_0$.

$$P = \frac{m\omega_1}{2\pi cr}\left[-P \cos \vartheta + \frac{ncM}{\omega_1 R^2}\right] J_{mn}(kR \sin \vartheta) \quad (R \cong R_c) \tag{12}$$

This contention shall be discussed for the case of a two-blade propeller.

In the integral

$$\int_0^{R_0} \frac{dP}{dR} e^{-i\epsilon_1} J_2(kR \sin \vartheta)\, dR$$

one may equate

$$J_2(kR \sin \vartheta) = \frac{1}{8}k^2R^2 \sin^2 \vartheta$$

One then obtains

$$\frac{k^2 \sin^2\vartheta}{8}\int_0^{R_0} \frac{dP}{dR}e^{-i\epsilon_1}R^2\,dR = \frac{k^2 \sin^2\vartheta}{8}R_1{}^2\int_0^{R_0} \frac{dP}{dR}e^{-i\epsilon_1}\,dR$$

$$\cong P\frac{k^2R_1{}^2 \sin^2\vartheta}{8}$$

$$\cong PJ_2(kR_1 \sin\vartheta)$$

A comparison of the relations

$$\int_0^{R_0} \frac{dP}{dR}R\,dR = PR_c$$

and

$$\int_0^{R_0} \frac{dP}{dR}R^2\,dR = PR_1{}^2$$

shows that

$$R_c < R_1 < \sqrt{R_0R_c}$$

The upper limit is reached when the forces are distributed with the maximum of nonuniformity, namely, concentrated at the ends of the blade. For the distributions occurring in practice, there is only little difference between R_1 and R_c.

In the integral

$$\int_0^{R_0} \frac{dM}{R^2\,dR} e^{-i\eta_1} J_2(kR \sin \vartheta)\, dR$$

the factor

$$\frac{J_2(kR \sin \vartheta)}{R^2}$$

is in first approximation fully independent of R and one can, therefore, substitute $R = R_1$; then

$$\int_0^{R_0} \frac{dM}{R^2\,dR} e^{-i\eta_1} J_2(kR \sin \vartheta)\, dR = \frac{J_2(kR_1 \sin \vartheta)}{R_1{}^2} \int_0^{R_0} \frac{dM}{dR} e^{-i\eta_1}\, dR$$

$$\cong \frac{M}{R_1{}^2} J_2(kR_1 \sin \vartheta)$$

Thus one obtains for the fundamental tone of a two-blade propeller the following expression for the sound-pressure amplitude

$$P = \frac{\omega_1}{2\pi cr}\left(-P \cos \vartheta + \frac{2cM}{\omega_1 R^2}\right) J_2(kR \sin \vartheta) \tag{13}$$

(with R being slightly larger than R_c).

For the second harmonic generally $R_1 \neq R_2$; however, approximately one may assume also in this case

$$P = \frac{2\omega_1}{2\pi cr}\left(-P \cos \vartheta + \frac{2cM}{\omega_1 R^2}\right) J_4(kR \sin \vartheta) \tag{14}$$

(In this case, the difference between R and R_c is larger.)

5. COMPARISON WITH THE EXPERIMENTAL RESULTS

The theoretical results are now to be compared with the experimental data of Paris and Kemp. For this purpose, the values P and M for the propeller used by these investigators must be known; unfortunately, they are not given directly; however, they may be calculated approximately on the basis of other given data. Both investigators experimented with a two-blade propeller of diameter of 4.5 meters and a number of revolutions of 13.9 per second. The propeller operated under static conditions. If one assumes that the motor developed under static conditions its full power (600 hp), one obtains according to the formula (1)

$$P = 1690 \text{ kg}$$

(under the assumption of $\eta = 0.75$, a quite probable value).

For the torque one obtains

$$M = 515 \text{ kgm}$$

Using these numerical values, two directional characteristics were calculated for the fundamental according to the formula (13), corresponding to the two values $R = 0.7R_0$ and $R = 0.75R_0$ (cf. figs. 9 and 10).

For the second harmonic a directional characteristic was calculated according to the formula (14) for the value $R = 0.75R_0$ (cf. fig. 11).

A comparison with the experimental directional characteristics (cf. figs. 3 and 4) shows that the main characteristics of the experimental curves for the fundamental tone are well borne out by the theory. The agreement with Paris' results is particularly good. For the second harmonic the agreement with Kemp's curve (fig. 5) is less satisfactory.

For the sound power results, according to the formula (10) by means of graphical and numerical integration, the values 34 W and 30 W for the fundamental corresponding to the values $R = 0.7R_0$ and $R = 0.75R_0$, and 6.5 W($R = 0.8R_0$) and 4.7 W($R = 0.75R_0$) for the second harmonic.

The agreement with Kemp's experimental values (17.8 W and 7.4 W) may be regarded as satisfactory if one takes into consideration, on the one hand, the approximate character of the present calculation of P and M, on the other, the possible experimental errors. (In this connection, the noticeable quantitative discrepancy between Kemp's and Paris' curves for the fundamental should be pointed out.)

Let it be noted that the formula (6) which forms the basis for the calculation of the sound field was derived from the equations of motion for small motions. This circumstance may lead to an underestimation of the higher harmonics. Perhaps this is the reason for the increasing discrepancy between the theory and Kemp's experimental values for the higher harmonics. However, a final decision of this problem requires further and more accurate experimental data.

Translated by Mary L. Mahler
National Advisory Committee
for Aeronautics

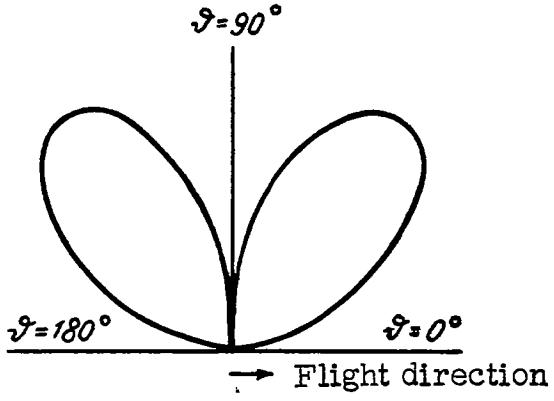

Figure 1.- Calculated directional characteristic for the fundamental tone of a two-blade propeller according to Lynam and Webb (hypothesis 1).

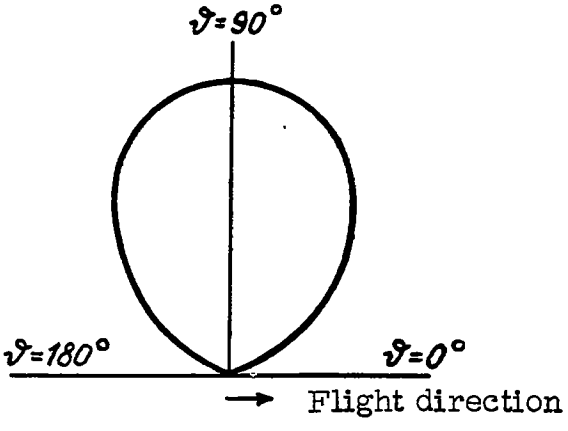

Figure 2.- Calculated directional characteristic for the fundamental tone of a two-blade propeller according to Lynam and Webb (hypothesis 2).

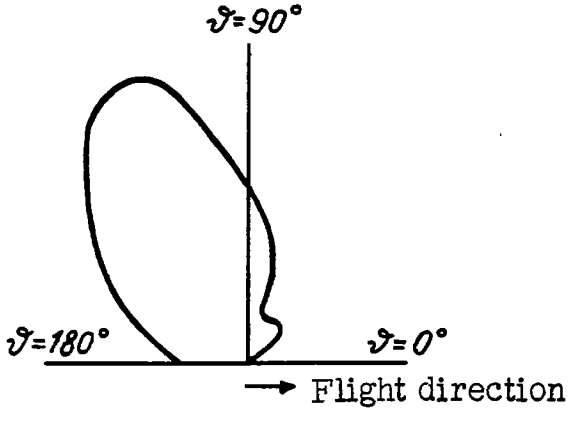

Figure 3.- Experimental directional characteristic for the fundamental tone according to Paris.

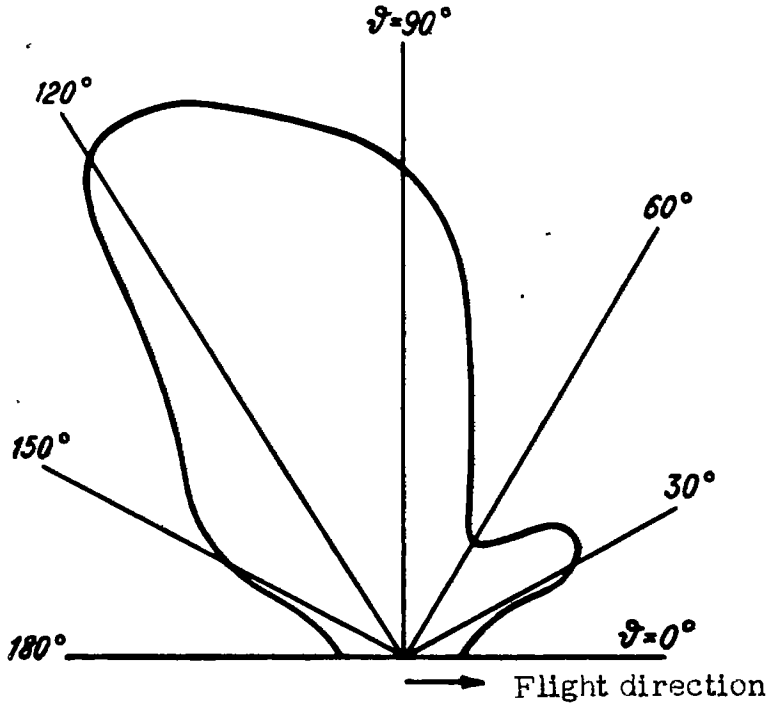

Figure 4.- Experimental directional characteristic for the fundamental tone according to Kemp.

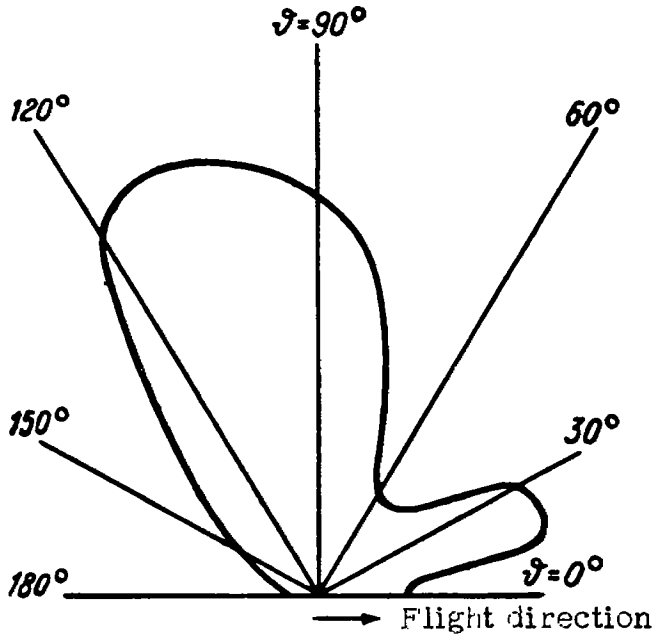

Figure 5.- Experimental directional characteristic for the second harmonic according to Kemp.

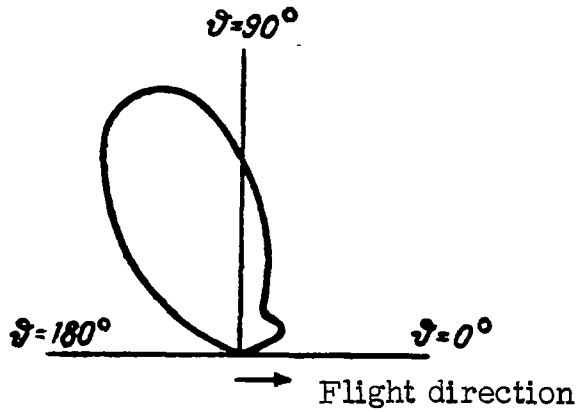

Figure 6.- Calculated directional characteristic for the fundamental tone according to Paris (combination of the two hypotheses by Lynam and Webb).

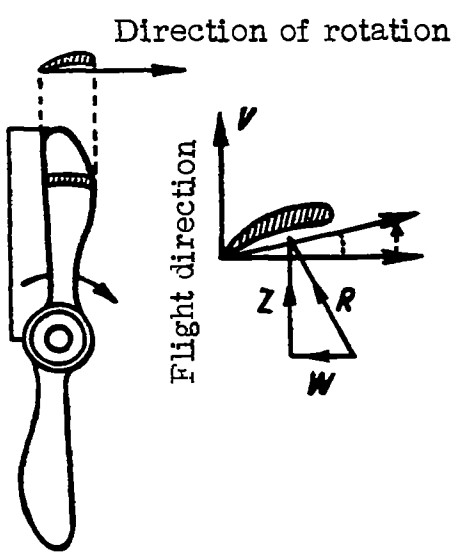

Figure 7.

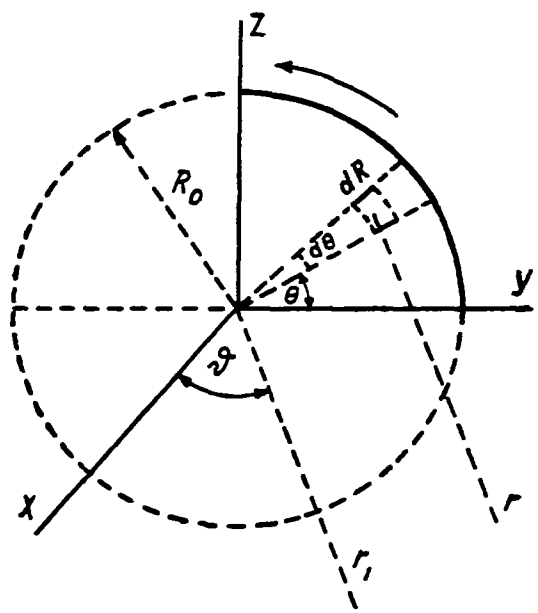

Figure 8.

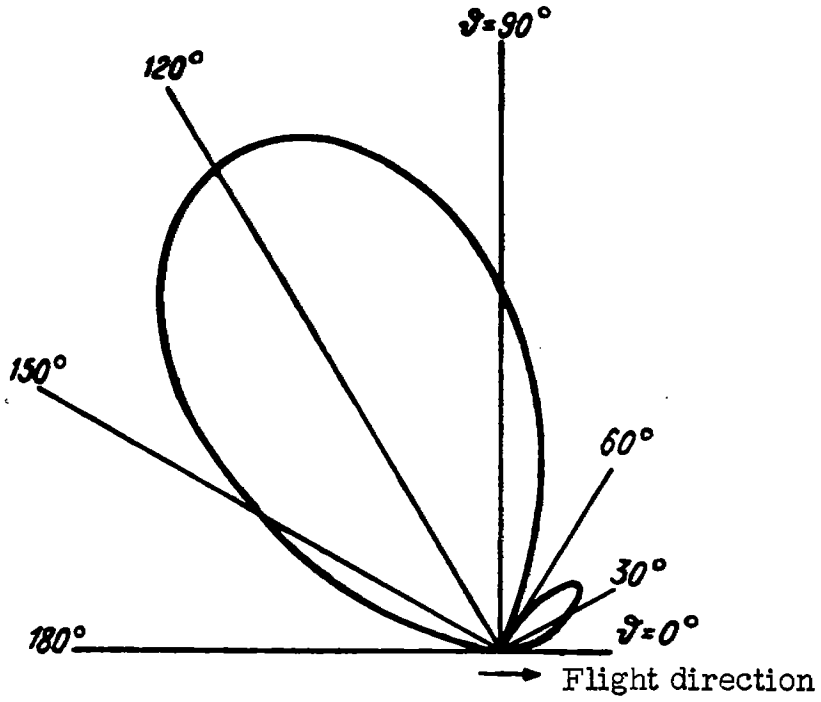

Figure 9.- Calculated directional characteristic for the fundamental tone ($R = 0.7R_o$).

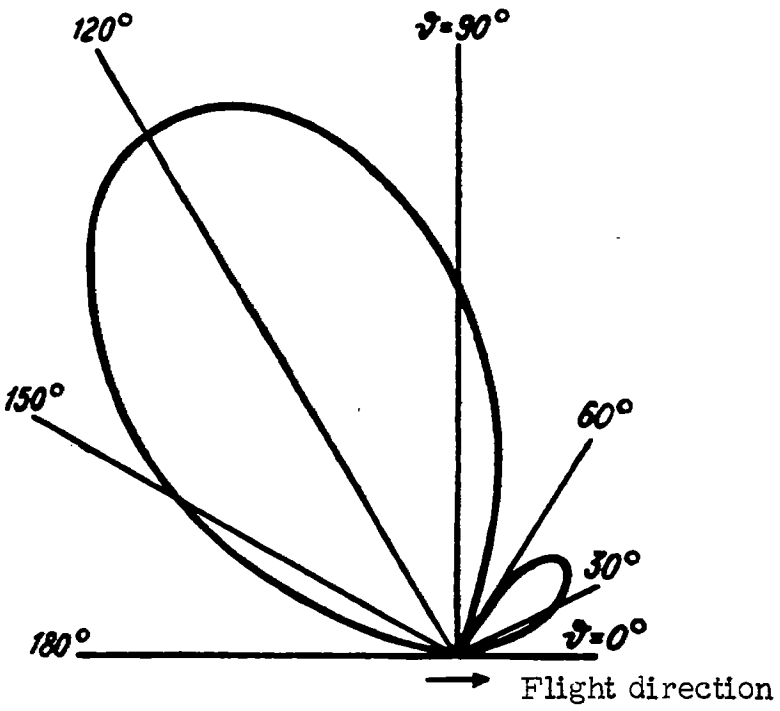

Figure 10.- Calculated directional characteristic for the fundamental tone ($R = 0.75R_o$).

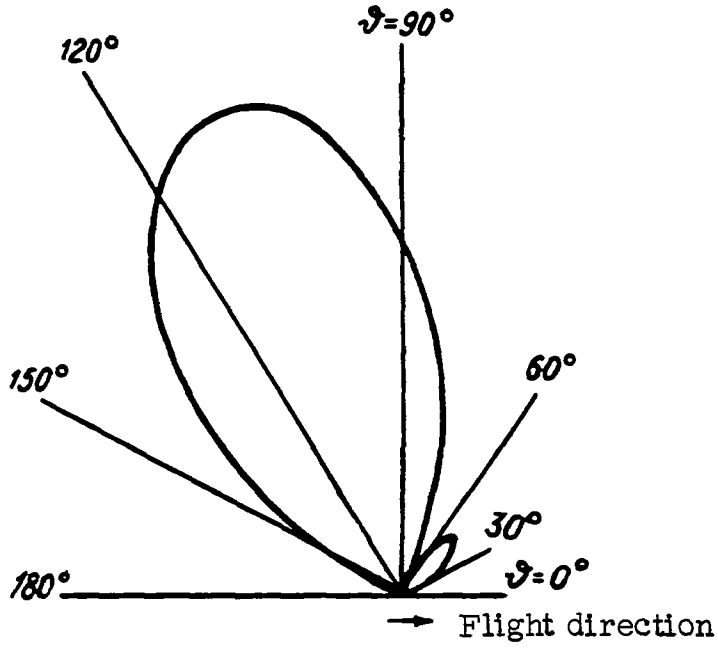

Figure 11.- Calculated directional characteristic for the second harmonic.