NACA TN No. 1629

8119

TECH LIBRARY KAFB, NM
0144494

NATIONAL ADVISORY COMMITTEE FOR AERONAUTICS

TECHNICAL NOTE

No. 1629

THE EXPERIMENTAL DETERMINATION OF THE MOMENTS OF INERTIA OF AIRPLANES BY A SIMPLIFIED COMPOUND-PENDULUM METHOD

By William Gracey

Langley Memorial Aeronautical Laboratory
Langley Field, Va.

Washington
June 1948

AFMDC
TECHNICAL LIBRARY
AFL 2811

Incl #2

ADC 54-186

TECH LIBRARY KAFB, NM
0144494

NATIONAL ADVISORY COMMITTEE FOR AERONAUTICS

TECHNICAL NOTE NO. 1629

THE EXPERIMENTAL DETERMINATION OF THE MOMENTS OF INERTIA OF AIRPLANES BY A SIMPLIFIED COMPOUND-PENDULUM METHOD

By William Gracey

SUMMARY

A simplified compound-pendulum method for the experimental determination of the moments of inertia of airplanes about the X- and Y-axes is described. The method is developed as a modification of the standard pendulum method reported previously (NACA Rep. No. 467). A brief review of the older method is included to form a basis for discussion of the simplified method.

The simplified method eliminates the necessity for determining the center-of-gravity location of the airplane and the suspension length by direct measurement. The suspension length (and hence, the vertical location of the center of gravity of the airplane) is found from the swinging experiments by determining the period of oscillation for two suspensions, measuring the difference between the two suspension lengths, and solving the equations for the two suspensions simultaneously for one of the suspension lengths. The moment of inertia of the airplane is then computed in accordance with the standard procedure.

The moments of inertia of an airplane and of a simple body were determined by both the standard and the simplified methods. The results of these tests show that the precision of the data obtained by the two methods is very nearly equal.

The several advantages which can be realized in the application of the new method are discussed. The hazardous aspects of this type of test, for example, are to a large extent eliminated because of the fact that the complete test program can be conducted with the airplane in a level attitude. In addition, the experimental technique, test apparatus, and time required to perform the tests are reduced. Because of these advantages, the possible application of the method to the testing of large airplanes is noted.

Hadc 54-1802

INTRODUCTION

The need for accurate measurements of the moments of inertia of airplanes first became evident about 1926 in conjunction with spinning investigations (reference 1). In response to this need the National Advisory Committee for Aeronautics developed an experimental method whereby the airplane is swung as a pendulum (reference 2). Sometime later the importance of the effects of the ambient air on the moments of inertia was recognized and a procedure for evaluating these effects was developed. A complete description of the pendulum method, as finally developed, was presented in reference 3.

During early experiments the precision of the results obtained with the compound pendulum was noted to be defined for the most part by the accuracy of the measurement of the suspension length. The accuracy of this measurement, in turn, was found to depend primarily on the exactness with which the center of gravity of the airplane could be located. Because the standard weighing procedure for center-of-gravity determinations was considered inadequate for fixing the vertical coordinate, the plumb-line suspension method was adopted as the most promising means of achieving the required accuracy. This method had the disadvantage, however, that the airplane was required to assume unnatural attitudes, a procedure entailing difficult handling problems and the possibility of severe damage to the airplane.

The British also recognized the measurement of the suspension length as being the weakest part of the pendulum method and showed (reference 4) that the problem could be circumvented by swinging the airplane at two suspension lengths. Although this proposal appeared to be an excellent solution to the problem, the British did not develop the method completely because the procedures for evaluating the effect of the ambient air had not been formulated at that time.

In another attempt to avoid the necessity for locating the center of gravity by the suspension method, the Russians developed an experimental method employing a compound pendulum having two degrees of freedom (reference 5). In this method the airplane is swung in such a manner that it oscillates simultaneously (in opposite directions) about the two axes at each end of the supporting bifilars. By means of the same suspension system the airplane is also swung as an ordinary compound pendulum. From a knowledge of the periods of oscillation of the two pendulums, the suspension lengths are computed and combined to yield a measure of the moment of inertia. Although the Russian method has the advantage that the moment of inertia is determined directly about the airplane axis, it is believed that the method will not find widespread acceptance because of the peculiar type of oscillation required for its application.

In spite of the difficulties involved in the center-of-gravity determination, the standard method proved entirely satisfactory for

testing the type of airplane (biplanes and parasol monoplanes) in use at the time the method was developed. With the advent of low-wing monoplanes, however, the application of the plumb-line suspension method became increasingly difficult and, as a consequence, the precision of the experiments decreased appreciably. In an effort to overcome these difficulties the NACA has developed the procedure suggested by the British into a complete and valid method by taking full account of the various factors (buoyancy, entrapped air, and ambient air) which must be considered for oscillations occurring in an air medium. This method has not only proved satisfactory for testing low-wing monoplanes but has also provided a much simpler procedure which can be advantageously applied to all types of airplanes.

The need for another method for the experimental determination of the moments of inertia of airplanes has been accentuated recently in connection with stability and control studies of large airplanes and heavy missiles. The purpose of this paper is to present the simplified pendulum method as a possible solution to this problem.

SYMBOLS

w	weight of airplane
w'	weight of swinging gear
W	weight of pendulum $(w + w')$
l	distance from axis of oscillation to center of gravity of airplane (suspension length)
l'	distance from axis of oscillation to center of gravity of swinging gear
L	distance from axis of oscillation to center of gravity of pendulum (pendulum length)
Δl	difference between two suspension lengths
D	length of bifilars
d	distance between bifilars
T	period of oscillation
V	total volume of airplane
V_s	volume of airplane structure

ρ density of air

g acceleration of gravity

M_A additional mass

I_V virtual moment of inertia of airplane

I_A additional moment of inertia

I_G moment of inertia of swinging gear about axis of rotation

I_{CL} moment of inertia of steel bar about midpoint

Subscripts:

exp experimental

calc calculated

APPLICATION OF STANDARD PENDULUM METHOD

In accordance with the procedure outlined in reference 3 the moments of inertia of an airplane are determined about the three body axes: namely, the X-axis, parallel to the thrust axis in the plane of symmetry, the Y-axis, perpendicular to the plane of symmetry, and the Z-axis, perpendicular to the thrust line in the plane of symmetry. The moments of inertia about the X- and Y-axes are obtained by oscillating the airplane as a compound pendulum; whereas the moment of inertia about the Z-axis is obtained by suspending the airplane as a bifilar torsional pendulum. For the X- and Y-axes, the axis of oscillation is parallel to the body axis; for the Z-axis, the axis of rotation and the body axis are coincident.

Because of the practical difficulty of finding suitable attachment points on the airplane structure for suspending the airplane during the swinging experiments, it has been found necessary to employ a rigid supporting apparatus, generally termed the "swinging gear." When used as a compound pendulum, the swinging gear consists of a rectangular framework suspended from two knife edges by a system of tie rods (figs. 1 and 2). The arrangement of tie rods is modified in the case of the torsional pendulum by the addition of two vertical rods with universal joints at the lower ends. A rigid spacer rod is mounted between the two universal joints in order to maintain the same distance between the vertical rods (bifilars) when the pendulum is oscillating (fig. 3). The moments of inertia of the swinging gear are determined experimentally by swinging the gear as an independent pendulum; the center of gravity of the gear is found by computation.

Inasmuch as the center of gravity of the airplane is the origin of the axes about which moments of inertia are determined, its location must be found prior to the swinging tests. The transverse location of the center of gravity is assumed to lie in the plane of symmetry. The horizontal and vertical locations, however, must be determined by experiment. The plumb-line suspension method employed for this determination consists essentially in suspending the airplane in two or more positions in the XZ-plane and locating the intersection of the projections of the plumb line from the point of suspension. These plumb lines, determined by means of a transit, apply to the entire suspension system, so that corrections must be made for the moment applied by the gear. The suspension of the airplane in different attitudes is accomplished by mounting the airplane on the same swinging gear used for the tests of the Y-axis. For this reason the cradle which supports the airplane is made longer than would be required to support the airplane in a level attitude. Nose-down and tail-down attitudes are obtained by sliding the airplane forward and rearward along the cradle. Obviously, the angular displacement between the two positions should be as large as possible for an accurate determination of the center of gravity. In practice, the total displacement must be kept less than 30° because of the danger involved.

The experimental data obtained from the swinging tests provide a measure of the moment of inertia of the complete pendulum, consisting of the airplane and the swinging gear, about the axis of oscillation. The moment of inertia of the airplane about the axis of oscillation is then obtained by subtracting the moment of inertia of the gear about this axis. For the compound pendulum, in which case the body axis of the airplane is removed from the axis of oscillation, the moment of inertia must be transferred to the airplane axis by an additional computation. For this transfer of axes, the mass which must be considered as operating about the axis of oscillation includes not only the mass of the airplane but also the mass of the external air disturbed by the motion of the airplane (so-called "additional-mass effect"). The quantity remaining after the transfer of axes is called the virtual moment of inertia and includes the moments of inertia of the airplane structure, of the air entrapped within the structure, and of the additional mass about the airplane axis. Since the true moment of inertia of the airplane consists only of the moments of inertia of the structure and the entrapped air, the moment of inertia of the additional mass about the body axis (called additional moment of inertia) must be evaluated and subtracted from the virtual moment of inertia by a further set of computations. This additional moment of inertia is determined by two factors, namely, the dimensions of the projected areas of the various components of the airplane acting about the body axis and the coefficients of additional moment of inertia obtained from tests of flat plates. The formulas and coefficients employed in these calculations may be found in references 3, 6, and 7.

After the center of gravity has been located, the airplane is swung at two different suspension lengths for each of the three axes. The virtual moment of inertia I_V is calculated in each case from the following equations:

$$I_V = \frac{Wd^2T^2}{16\pi^2D} - I_G \tag{1}$$

for the bifilar torsional pendulum, and

$$I_V = \frac{WLT^2}{4\pi^2} - \left(\frac{w}{g} + V\rho + M_A\right)l^2 - I_G \tag{2}$$

for the compound pendulum.

Because the tests are conducted in air, the weight of the airplane which must be considered as contributing to the restoring moment of the pendulum is the virtual weight, that is, the true (or vacuum) weight less the buoyancy of the structure. As the quantity which is determined when the airplane is weighed in air is also the virtual weight, the weighing results can be applied directly in the preceding equations.

In transferring the moment of inertia from the axis of rotation to the body axis, however, the true mass of the airplane must be considered. The true mass of the airplane was shown in reference 3 to consist of two items: the mass of the airplane structure and the mass of the air entrapped within the structure. The true mass is obtained by correcting the virtual mass w/g for the effect of buoyancy and adding the mass of entrapped air; thus,

$$\begin{aligned} M &= \frac{w}{g} + V_s\rho + (V - V_s)\rho \\ &= \frac{w}{g} + V\rho \end{aligned} \tag{3}$$

where V_s is the volume of the structure and V is the total volume of the airplane. The quantity $\left(\frac{w}{g} + V\rho\right)$, therefore, represents the true mass of the airplane.

The additional-mass factor M_A, which must also be taken into account in transferring the moment of inertia to the airplane axis, is computed from a consideration of the projected area of that part of the airplane normal to the motion of the pendulum. Details of the procedure employed in these computations may be found in references 3 and 7. For the X-axis, the projected area includes the side area of the fuselage and the vertical tail surfaces. In the case of the Y-axis, the frontal area of the airplane is ordinarily so small that the additional-mass correction for this axis can be neglected. The center of the additional mass is assumed to coincide with the center of gravity of the airplane; for this reason the suspension length of the additional mass is the same as that of the airplane.

The virtual moment of inertia about the Z-axis is found immediately upon substitution of the pendulum characteristics in equation (1). In the case of the X- and Y-axes, $V\rho$ and M_A are first calculated and I_V is determined by substitution of these values in equation (2). A check computation is then made by solving the equations for the two suspensions simultaneously, I_V and $\left(V\rho + M_A\right)$ being the unknowns. Swinging the airplane at two suspensions, therefore, not only provides a measure of the precision of the experiments but is also useful as a means of checking the computed values of the quantity $\left(V\rho + M_A\right)$.

It will be seen from equation (2) that the characteristics which must be evaluated for determining the moments of inertia about the X- and Y-axes are the weight, the suspension length, the period of oscillation, and the quantity $\left(V\rho + M_A\right)$. The weight of the airplane can be measured very accurately without difficulty. Similarly, by taking the mean of 50 or more oscillations, the period can be determined with good precision. Furthermore, if reasonable care is exercised in computing the airplane volume and projected areas, sufficiently accurate values of $\left(V\rho + M_A\right)$ can ordinarily be obtained. Actually, relatively large inaccuracies can be tolerated in evaluating this item, because the magnitude of the combined effects of the entrapped and ambient air is small in relation to the measured moment of inertia. It was shown in reference 3, for example, that an error of as much as 10 percent in the computation of the mass of the entrapped air and the additional mass contributes an error of only 0.8 percent in the moment of inertia about the X-axis and only 0.3 percent in that about the Y-axis. These estimates were based on the type of airplane in existence during the early 1930's. For modern, more dense airplanes, the effects of the entrapped air and the additional mass will represent an even smaller percentage of the final results.

In contrast to the other three items, the measurement of the suspension length, that is, the distance between the axis of oscillation and the center of gravity of the airplane, is both difficult

and subject to large errors. The difficulties in determining the suspension length arise not only from the laborious center-of-gravity procedure but also because the points of suspension and the center of gravity of the airplane do not lie along a plumb line; for this reason the length measurement must be arrived at indirectly by determining the elevations of the knife edges and of the center of gravity by means of a transit. In spite of the fact that eight separate quantities must be measured in determining the difference between the two elevations, the error in the length measurement is usually small (about 1/16 in.). The greater part of the over-all error in the suspension length must, therefore, be ascribed to the inaccuracy in the vertical location of the center of gravity.

The test procedure for determining the center-of-gravity location and the suspension length proved entirely satisfactory for the testing of biplanes and parasol monoplanes. The application of the procedure to low-wing monoplanes, however, especially those with highly tapered wings, presented many difficulties, all tending to decrease the accuracy of the tests. For example, because of the large root chords of the tapered wings, the angular displacements which could be obtained with cradles of a reasonable size were found to be too small for an accurate determination of the center of gravity. Furthermore, as the center of gravity was ordinarily located just above the wing, the projection of plumb lines in the region of the center of gravity was often impossible unless the transit was elevated above floor level; this expedient was made difficult by the problems of providing stable support for the transit and of alining the transit with the plane of the knife edges. The large dihedral angles of the wings, another factor tending to obstruct the line of sight to the center of gravity, increased the sighting difficulties to the extent that the projections of the plumb line had to be drawn, in many cases, on the upper part of the fuselage. The extrapolation of these plumb lines, especially on circular fuselages, led to serious inaccuracies in determining the location of the center of gravity. Difficulties were also experienced in measuring the suspension length, for in order to sight the center of gravity from the hangar floor it was found necessary to employ longer suspensions than had been used previously. The use of longer suspensions reduced the precision of the final results appreciably, because the moment of inertia about the airplane axis became a smaller percentage of the measured moment of inertia about the axis of oscillation.

The determination of the moments of inertia about the Z-axis by means of the bifilar torsional pendulum presents none of the difficulties encountered in the application of the compound-pendulum method for the X- and Y-axes. In the first place, the vertical location of the center of gravity does not enter into the calculations for the torsional pendulum. Second, the only dimensions required for the solution of equation (1) are the length and spacing of the bifilars, measurements which can be made

directly and with good accuracy. These advantages, coupled with the fact that no transposition of axes is necessary in the case of the torsional pendulum, account for the higher precision ordinarily obtained for the moments of inertia about the Z-axis.

DEVELOPMENT OF THE SIMPLIFIED COMPOUND-PENDULUM METHOD

The development of the simplified compound-pendulum method is based directly on the test procedure described in reference 3. Simply stated, the method consists in determining the period of oscillation for two suspensions, measuring the difference between the two suspension lengths, and solving the equations of the two suspensions simultaneously for one of the suspension lengths. The solution of these equations determines the vertical location of the center of gravity of the airplane immediately. The virtual moment of inertia is then found by inserting the suspension length in the appropriate original equation and proceeding with the computations in the manner outlined in reference 3.

The equation required for the solution of the suspension length is derived by the application of equation (2). When the airplane is tested at two suspension lengths, the equations for the two suspensions become

$$I_{V_S} = \frac{W_S L_S T_S^2}{4\pi^2} - \left(\frac{w}{g} + V\rho + M_A\right) l_S^2 - I_{G_S} \tag{4}$$

$$I_{V_L} = \frac{W_L L_L T_L^2}{4\pi^2} - \left(\frac{w}{g} + V\rho + M_A\right) l_L^2 - I_{G_L} \tag{5}$$

where the subscripts S and L refer to the short and long suspensions, respectively.

From the principle of moments, the pendulum length may be expressed in terms of the moments of the airplane and of the swinging gear about the axis of rotation; thus,

$$L = \frac{wl + w'l'}{W} \tag{6}$$

The substitution of equation (6) in equations (4) and (5) yields

$$I_{V_S} = \frac{\left(wl_S + w'_S l'_S\right)T_S^2}{4\pi^2} - \left(\frac{w}{g} + V\rho + M_A\right) l_S^2 - I_{G_S} \tag{7}$$

$$I_{V_L} = \frac{\left(wl_L + w'_L l'_L\right)T_L^2}{4\pi^2} - \left(\frac{w}{g} + V\rho + M_A\right) l_L^2 - I_{G_L} \tag{8}$$

From the relation $l_L = l_S + \Delta l$ (where Δl is the difference between the two suspension lengths), equation (8) may be expressed as

$$I_{V_L} = \frac{\left[\left(l_S + \Delta l\right)w + w'_L l'_L\right]T_L^2}{4\pi^2} - \left(\frac{w}{g} + V\rho + M_A\right)\left(l_S + \Delta l\right)^2 - I_{G_L} \tag{9}$$

The moment of inertia of the airplane about its body axis is, of course, the same for both long and short suspensions so that $I_{V_L} = I_{V_S}$. The suspension length for the short suspension can, therefore, be found by solving equations (7) and (9) simultaneously. The solution of these equations becomes

$$l_S = \frac{T_S^2 w'_S l'_S - T_L^2\left(w\,\Delta l + w'_L l'_L\right) + 4\pi^2\left[\left(\frac{w}{g} + V\rho + M_A\right)(\Delta l)^2 + I_{G_L} - I_{G_S}\right]}{w\left(T_L^2 - T_S^2\right) - 8\pi^2\,\Delta l\left(\frac{w}{g} + V\rho + M_A\right)} \tag{10}$$

From the value of l_S found in this manner, the pendulum length may be calculated from equation (6) and the virtual moment of inertia determined by the solution of equation (4).

Although a knowledge of the longitudinal location of the airplane center of gravity is not required for calculating the moments of inertia, the determination of this location prior to the swinging experiments is advisable. This measurement can be made with sufficient accuracy by

weighing the airplane in a level attitude and applying the principle of moments. When mounted on the swinging gear, the airplane should be oriented so that its center of gravity is directly above the center line of the cradle. If the center of gravity has been accurately located, the cradle will be level.

The accuracy of the measurement of the suspension length by means of the simplified method is seen from equation (10) to depend to a large extent on the precision of the periods of oscillation. In the past, the period had been determined by timing 50 complete oscillations by means of an ordinary stop watch. The watch was operated manually when the center of the gear was observed to pass a vertical reference. As a means of improving the precision of these measurements, a more accurate, automatic timing system was devised. The improvement in accuracy was accomplished by employing an electronic timing mechanism which had been previously developed for use with an ultra-high-speed camera. The automatic feature of the system consisted of an electrical means for starting the clock and stopping it again at the end of 50 oscillations. The actuator used to operate the clock is a mercury contact switch mounted at the center of the cradle.

From a cursory examination of the simplified method the precision of I_V was thought to be influenced to an appreciable extent by the accuracy of $\left(V\rho + M_A\right)$, for this quantity enters into the calculation of both l and I_V. Actually, as will be shown in the section entitled "PRECISION," the errors in this quantity tend to cancel, so that a given error in $\left(V\rho + M_A\right)$ will produce a smaller error in I_V as computed by the simplified method than would be incurred if the standard method were employed.

The difference in the length of the two suspensions should, of course, be made as large as is practical. The distance between a reference point on the airplane (or cradle) and any fixed point directly below or above is then found for each suspension. As the difference in the suspension lengths involves only two dimensions, both of which can be determined easily and with good precision, the value of Δl can be determined very accurately.

RESULTS

In order to determine from actual experiment the precision which could be expected with the simplified compound-pendulum method, swinging tests were conducted on a low-wing monoplane weighing 6358 pounds. From these tests the moments of inertia about the X- and Y-axes were determined by both the standard and the simplified methods. As the results obtained by the older method were to be used as the standard for

comparison, extreme care was exercised in locating the center of gravity of the airplane and in measuring the suspension length. In addition to the measurements required for the application of the standard method, the distance from a point on the wing to a reference point directly above was found for each suspension. Values of Δl were obtained as the difference between two such measurements.

The computations employed for these tests are given in the appendix. The results of these computations are summarized in table I.

These results show the computed values of the suspension length to check the measured values to within 0.011 foot or slightly more than 1/8 inch. The precision of the standard method, as shown by the agreement between the two values obtained by this method, is regarded as unusually good for this type of airplane. The precision of the simplified method, as based on the deviations of the test results from the mean value obtained with the standard method, is seen to be almost the same as that of the standard method.

In spite of the good agreement in the results of the airplane tests, it was felt that the two methods should be compared independently against a third standard. Swinging tests were therefore conducted with a solid steel bar, the moment of inertia of which could be accurately calculated. These tests differed from the airplane tests in that the center of gravity did not have to be determined experimentally, the suspension length could be measured directly, and the quantities $\left(V\rho = M_A\right)$ and I_A could be neglected. The dimensions of the bar chosen for the tests were $1\frac{5}{8}$ inches by 4 inches by 18 feet $9\frac{1}{4}$ inches; the weight was 423.3 pounds. Although the mass of the bar was small compared to that of an airplane, the suspension lengths and periods were of the same order as those of the usual airplane test. The moment of inertia of the bar about its center line I_{CL} as determined in each case is presented in table II.

The computed values of the suspension length are shown to agree with the measured values within 0.006, 0.009, and 0.007 foot (less than 1/8 inch in each case). The precision of the virtual moments of inertia, as defined by the deviations from the computed value, is of the same order for both standard and simplified methods.

PRECISION

The precision with which the moments of inertia about the airplane axes can be found depends on three items: (1) the precision of the measured moment of inertia about the axis of oscillation, (2) the precision of the evaluation of the entrapped air and the additional

mass in transposing the compound-pendulum results to the airplane axes, and (3) the precision in the computation of the additional moment of inertia. The relative magnitude of the precision of these items for each of the airplane axes was estimated in reference 3. On the basis of this analysis, the over-all precision of the true moments of inertia was shown to be ±2.5 percent for the X-axis, ±1.3 percent for the Y-axis, and ±0.8 percent for the Z-axis.

The sum of the precision of the first two preceding items defines the precision of the virtual moment of inertia of the airplane about its axis. The precision of the virtual moments of inertia obtained by the standard method was estimated in reference 3 to be less than ±1 percent for the X- and Y-axes. This estimate of precision represents the accumulated errors in the measurement of the weight, the period, the suspension length (including, of course, the error in the center-of-gravity location), and the quantity $\left(V\rho + M_A\right)$. For the simplified method the precision of the virtual moment of inertia depends for the most part on the errors in the weight, the two periods of oscillation, the difference in the suspension lengths, and the quantity $\left(V\rho + M_A\right)$. (The pendulum characteristics of the swinging gear are assumed herein to be determined with negligible error.)

As a means of evaluating the relative precision of the standard and simplified methods, computations were made to determine to what extent each of the individual errors would affect the virtual moment of inertia as calculated by each method. For this analysis the error in the weight measurement was estimated to be 5 pounds, that for the suspension length 0.01 foot (1/8 in.), and that for Δl 0.005 foot (1/16 in.). The probable error of the periods of oscillations was computed to be less than ±0.0005 second. The value of $V\rho$ was assumed to be accurate to within 10 percent; the additional mass M_A, for the case considered, was negligible. The computations were made by use of the data from the tests of the airplane about the Y-axis. (See appendix.) In each computation one of the variables was changed by the amount noted; for the evaluation of the period error in the simplified method, the two periods were changed in opposite directions. The results of these calculations are given in table III.

On the basis of the estimated errors used in these calculations, the precision of the virtual moment of inertia is shown to be 0.43 percent for the standard method and 0.55 percent for the simplified method.

The $\frac{1}{8}$-inch error assumed for the suspension length was chosen because of the agreement in the results of the airplane tested in the present investigation and because of the accuracy with which the center of gravity could be located on the type of airplane (biplanes and so forth) for which the method was developed. It should be

appreciated, however, that an accuracy of 1/8 inch in the determination of the center-of-gravity location by the standard method will seldom be realized in testing low-wing monoplanes. If the error is as much as 1/2 inch, which is not at all uncommon for this type of airplane, the individual error would be 0.46 percent instead of 0.13 percent and the sum of the errors would then be 0.81 percent. The precision of I_Y as determined by the standard method is seen, therefore, to be largely dependent on the accuracy of the suspension length.

The precision of I_Y as determined by the simplified method, on the other hand, depends for the most part on the accuracy of the periods. If the error in timing had been 0.001 second, for example, the error contributed by the periods would have been 0.50 percent for the simplified method. An error of 0.001 second in the calculation of I_Y by the standard method, however, would produce an error of only 0.15 percent.

As noted previously, errors in $\left(V\rho + M_A\right)$ tend to cancel when the simplified method is employed. A given error in this quantity, consequently, produces a somewhat smaller error in the final results obtained with the simplified method than is produced in the moment of inertia computed by the standard method.

The results of this analysis are in agreement with the results of the swinging experiments in showing the over-all precision of the two methods to be essentially the same. This conclusion applies, of course, only when the error in the suspension length for the standard method is no greater than that assumed herein.

EVALUATION OF METHODS

Several advantages may be realized in the use of the simplified compound-pendulum method. The most important advantage is the elimination of the necessity for suspending the airplane in the unusual attitudes required for the center-of-gravity determination by the standard pendulum method. This feature of the method not only avoids very serious handling difficulties but also minimizes the hazard involved in swinging an airplane. Furthermore, as the cradle need be only long enough to support the airplane in a level attitude, the size of the swinging apparatus may be reduced. For special cases, for example, when the airplane is equipped with suitably located lifting lugs, the supporting cradle may be discarded entirely. Suspending the airplane from these points of attachment would introduce an additional simplification in that the moment of inertia of the suspension rods can be readily estimated; the need for finding the moment of inertia of the swinging gear by experiment would thus be eliminated. The fact that the entire

test program can be conducted with the airplane in a level attitude not only provides a simpler method but also makes possible the testing of much larger and heavier airplanes.

The precision of the measurements has already been noted to improve as the suspension length is decreased. The simplified method permits the use of shorter suspension lengths for low-wing monoplanes because the necessity for sighting the center of gravity of the airplane in measuring the suspension length by the standard method is avoided.

By eliminating the procedure for determining the center-of-gravity location and the suspension length by direct measurement, the total time required for finding the moments of inertia about the three axes may be reduced considerably. If it is desired to check the results obtained by the simplified method, the airplane may be swung at a third suspension length. The additional time required for the third suspension would be of little consequence compared with the time saved by eliminating the center-of-gravity and suspension-length procedures.

The results of comparative tests of the standard and simplified methods have shown that the several advantages of the simplified method can be realized without sacrificing the precision of the final results.

CONCLUSIONS

A simplified compound-pendulum method which eliminates the necessity for determining the center-of-gravity location of the airplane and the suspension length by direct measurement has been developed as a modification of the standard method described in NACA Rep. No. 467. The following conclusions are indicated:

1. The method can be successfully applied to the determination of the moments of inertia about the X- and Y-axes of airplanes.

2. The precision of the results obtained in the application of the simplified method is equal to that obtained from the standard pendulum method.

3. The simplified method permits a reduction in experimental technique, test apparatus, and time required to perform the tests.

Langley Memorial Aeronautical Laboratory
National Advisory Committee for Aeronautics
Langley Field, Va., January 14, 1948

APPENDIX

COMPUTATIONS FOR SWINGING TESTS OF AIRPLANE

The following are the data and computations which were used for determining the virtual moments of inertia about the X- and Y-axes of a low-wing monoplane.

X-axis.- The experimental data for this axis are

	Short suspension	Long suspension
w, lb	6358	6358
w', lb	450.1	456.4
W, lb	6808.1	6814.4
l, ft	10.172	11.376
l', ft	12.101	13.093
L, ft	10.300	11.491
T, sec	3.9379	4.0900
$V\rho$, slugs	1.37	1.37
M_A, slugs	0.99	0.99
I_G, slug-ft^2	2360	2793

By the standard pendulum method, I_V is calculated as follows:

$$I_{V_S} = \frac{6808.1 \times (3.9379)^2 \times 10.300}{39.479} - \left(\frac{6358}{32.147} + 1.37 + 0.99\right)(10.172)^2 - 2360$$

I_{V_S} = 4475 slug-feet square

$$I_{V_L} = \frac{6814.4 \times (4.0900)^2 \times 11.491}{39.479} - \left(\frac{6358}{32.147} + 1.37 + 0.99\right)(11.376)^2 - 2793$$

I_{V_L} = 4486 slug-feet square

The value of I_V, that is, the average of I_{V_S} and I_{V_L}, is 4481 slug-feet square.

A check value of I_V is obtained by solving the equations for the two suspensions simultaneously, $(V\rho + M_A)$ and I_V being the unknowns.

$$I_{V_S} = 4720 - \left(V\rho + M_A\right)(10.172)^2$$

$$I_{V_L} = 4792 - \left(V\rho + M_A\right)(11.376)^2$$

$$V\rho + M_A = 2.78$$

$$I_V = I_{V_S} = I_{V_L} = 4434 \text{ slug-feet square}$$

The agreement between the average and check values is within 1.05 percent.

By the simplified pendulum method, I_V is calculated as follows:

$$\Delta l = 1.210 \text{ feet}$$

Then,

$$l_S = \frac{(3.9379)^2 \times 450.1 \times 12.101 - (4.0900)^2(6358 \times 1.210 + 456.4 \times 13.093) + 39.479\left[\left(\frac{6358}{32.147} + 1.37 + 0.99\right)(1.210)^2 + 2793 - 2360\right]}{6358\left[(4.0900)^2 - (3.9379)^2\right] - 78.958 \times 1.210\left(\frac{6358}{32.147} + 1.37 + 0.99\right)}$$

$l_S = 10.171$ feet

and

$l_L = 10.171 + 1.210 = 11.381$ feet

Based on a suspension length of 10.171 feet, the pendulum length for the short suspension is found to be 10.299 feet. Then,

$$I_{V_S} = \frac{6808.1 \times (3.9379)^2 \times 10.299}{39.479} - \left(\frac{6358}{32.147} + 1.37 + 0.99\right)(10.171)^2 - 2360$$

$$I_{V_S} = 4477 \text{ slug-feet square}$$

The value of I_{V_L} will, of course, be the same as I_{V_S}.

Y-axis.– The experimental data for this axis are

	Short suspension	Long suspension
w, lb	6358	6358
w', lb	470.1	470.1
W, lb	6828.1	6828.1
l, ft	9.064	12.851
l', ft	10.771	14.584
L, ft	9.182	12.970
T, sec	4.1200	4.4773
$V\rho$, slugs	1.37	1.37
M_A, slugs	0	0
I_G, slug-ft^2	2134	3609

By the standard pendulum method, I_V is calculated as follows:

$$I_{V_S} = \frac{6828.1 \times (4.1200)^2 \times 9.182}{39.479} - \left(\frac{6358}{32.147} + 1.37\right)(9.064)^2 - 2134$$

I_{V_S} = 8461 slug-feet square

$$I_{V_L} = \frac{6828.1 \times (4.4773)^2 \times 12.970}{39.479} - \left(\frac{6358}{32.147} + 1.37\right)(12.851)^2 - 3609$$

I_{V_L} = 8469 slug-feet square

Therefore, the value of I_V is 8465 slug-feet square.

The check value of I_V is found from the equations:

$$I_{V_S} = 8574 - V\rho(9.064)^2$$

$$I_{V_L} = 8696 - V\rho(12.851)^2$$

$$V\rho = 1.47$$

$$I_V = I_{V_S} = I_{V_L} = 8453 \text{ slug-feet square}$$

The agreement between the average and the check values is 0.14 percent.

By the simplified pendulum method, I_V is calculated as follows:

$$\Delta l = 3.799 \text{ feet}$$

Then,

$$l_S = \frac{(4.1200)^2 \times 470.1 \times 10.771 - (4.4773)^2(6358 \times 3.799 + 470.1 \times 14.584) + 39.479\left[\left(\frac{6358}{32.147} + 1.37\right)(3.799)^2 + 3609 - 2134\right]}{6358\left[(4.4773)^2 - (4.1200)^2\right] - 78.958 \times 3.799\left(\frac{6358}{32.147} + 1.37\right)}$$

$l_S = 9.053$ feet

and

$l_L = 9.053 + 3.799 = 12.852$ feet

Based on a suspension length of 9.053 feet, the pendulum length for the short suspension is found to be 9.171 feet. Then,

$$I_{V_S} = \frac{6828.1 \times (4.1200)^2 \times 9.171}{39.479} - \left(\frac{6358}{32.147} + 1.37\right)(9.053)^2 - 2134$$

$I_{V_S} = 8470$ slug-feet square

The value of I_{V_L} will, of course, be the same as I_{V_S}.

REFERENCES

1. Green, M. W.: Measurement of the Moments of Inertia of Full Scale Airplanes. NACA TN No. 265, 1927.

2. Miller, M. P.: An Accurate Method of Measuring the Moments of Inertia of Airplanes. NACA TN No. 351, 1930.

3. Soulé, Hartley A., and Miller, Marvel P.: The Experimental Determination of the Moments of Inertia of Airplanes. NACA Rep. No. 467, 1933.

4. Gates, S. B.: The Determination of the Moments of Inertia of Aeroplanes. R. & M. No. 1415, British A.R.C., 1932.

5. Pobedonoszeff, J.: An Experimental Method of Determination of the Moments of Inertia of Aeroplanes. Rep. No. 201, Trans. CAHI (Moscow), 1935.

6. Gracey, William: The Additional-Mass Effect of Plates as Determined by Experiments. NACA Rep. No. 707, 1941.

7. Malvestuto, Frank S., Jr., and Gale, Lawrence J.: Formulas for Additional Mass Corrections to the Moments of Inertia of Airplanes. NACA TN No. 1187, 1947.

TABLE I

RESULTS OF SWINGING TESTS OF AIRPLANE

Axis	Suspension	l (ft)	I_V (slug-ft^2)	I_V (mean value) (slug-ft^2)	Deviation of I_V from I_V (mean value) (percent)
Standard method					
X	Short Long	10.172 11.376	4475 4486	4481	0.12
Y	Short Long	9.064 12.851	8461 8469	8465	.05
Simplified method					
X	Short Long	10.171 11.381	4477		.09
Y	Short Long	9.053 12.852	8470		.06

TABLE II

RESULTS OF SWINGING TESTS OF SOLID BODY

Method	Suspension	l (ft)	I_{CL} (slug-ft^2)	Deviation from computed value of I_{CL} (percent)
Computation			386.8	
Standard	1	12.417	385.8	0.26
	2	10.243	385.9	.23
	3	7.773	386.2	.16
Simplified	1 and 2	10.237	386.4	.10
	2 and 3	7.764	386.6	.05
	1 and 3	7.766	386.6	.05

NACA

TABLE III

RESULTS OF PRECISION ANALYSIS

Variable		$I_{V_{calc}}$ (slug-ft^2)	Error $\left(\frac{I_{V_{exp}} - I_{V_{calc}}}{I_{V_{exp}}} \times 100\right)$ (percent)
Symbol	Adjusted measurement		
Standard method; $I_{V_{exp}}$ = 8461 slug-ft^2			
w	6363 lbs	8468	0.08
l	9.074 ft	8450	.13
T	4.1195 sec	8454	.08
$V\rho$	1.507 slugs	8449	.14
Simplified method; $I_{V_{exp}}$ = 8470 slug-ft^2			
w	6363 lbs	8478	0.09
Δl	3.804 ft	8461	.11
T_S	4.1195 sec	8447	.27
T_L	4.4778 sec		
$V\rho$	1.507 slugs	8467	.08

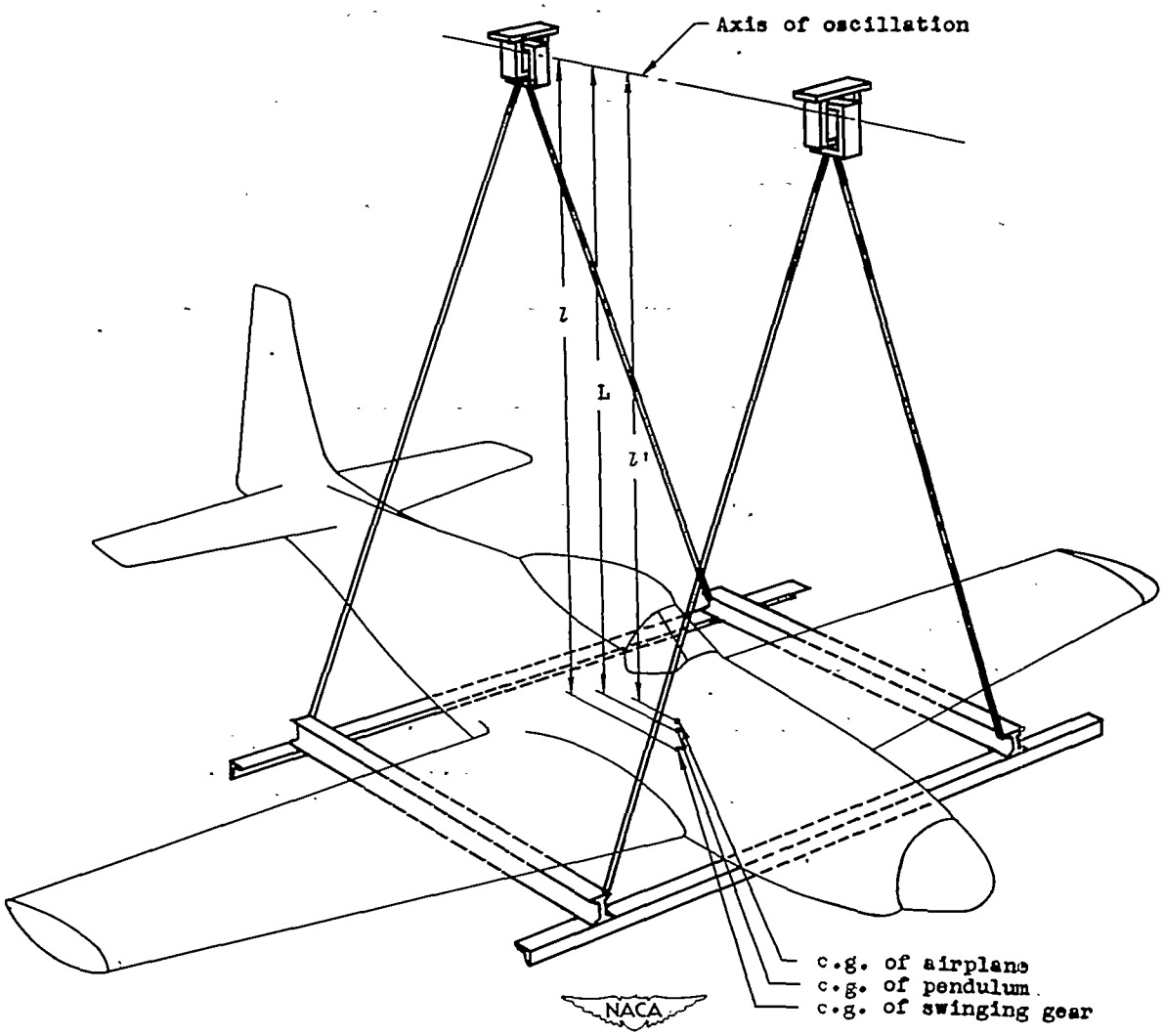

Figure 1.- Airplane and swinging gear arranged for the determination of the moment of inertia about the X-axis by the compound-pendulum method.

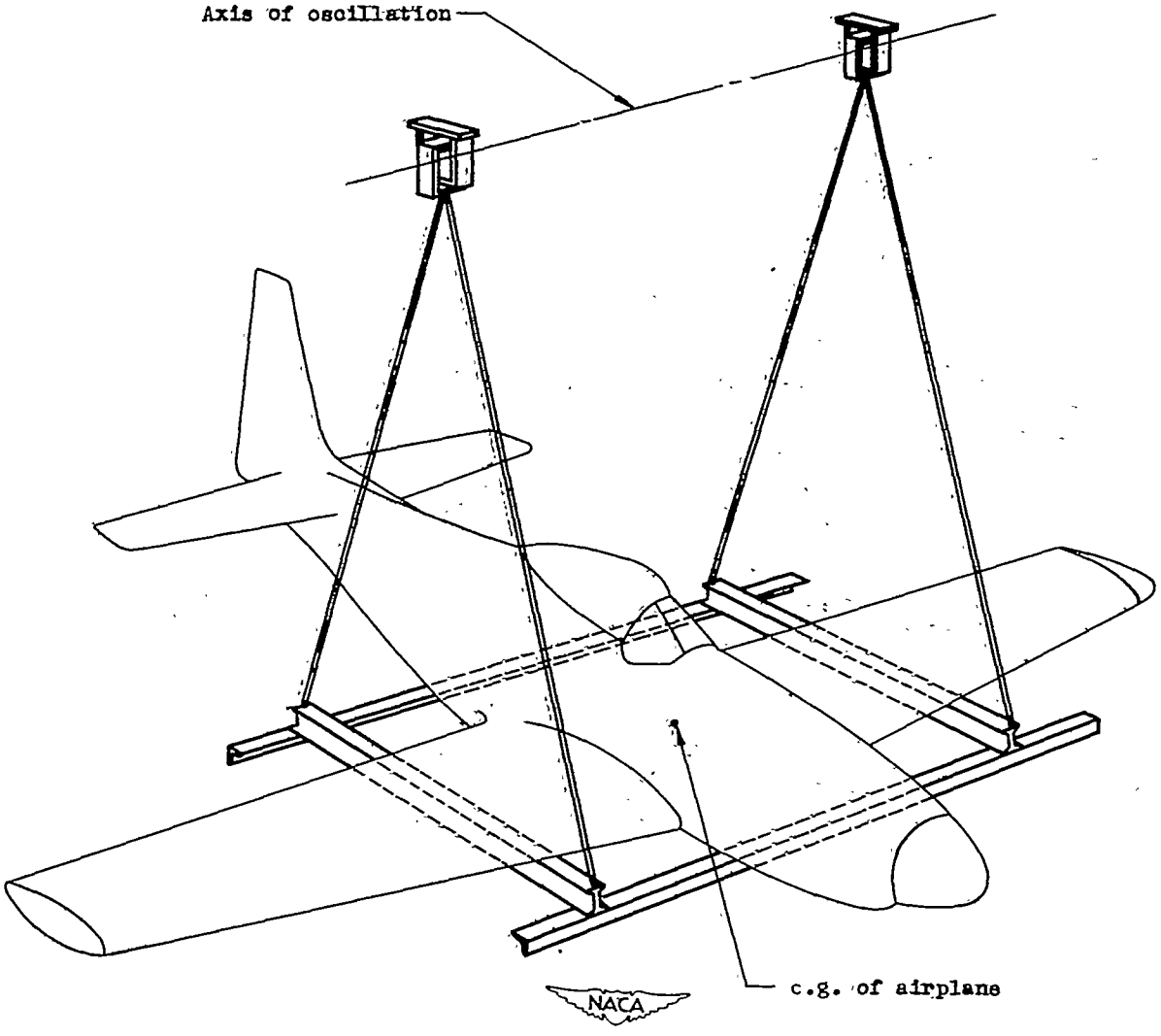

Figure 2.- Airplane and swinging gear arranged for the determination of the moment of inertia about the Y-axis by the compound-pendulum method.

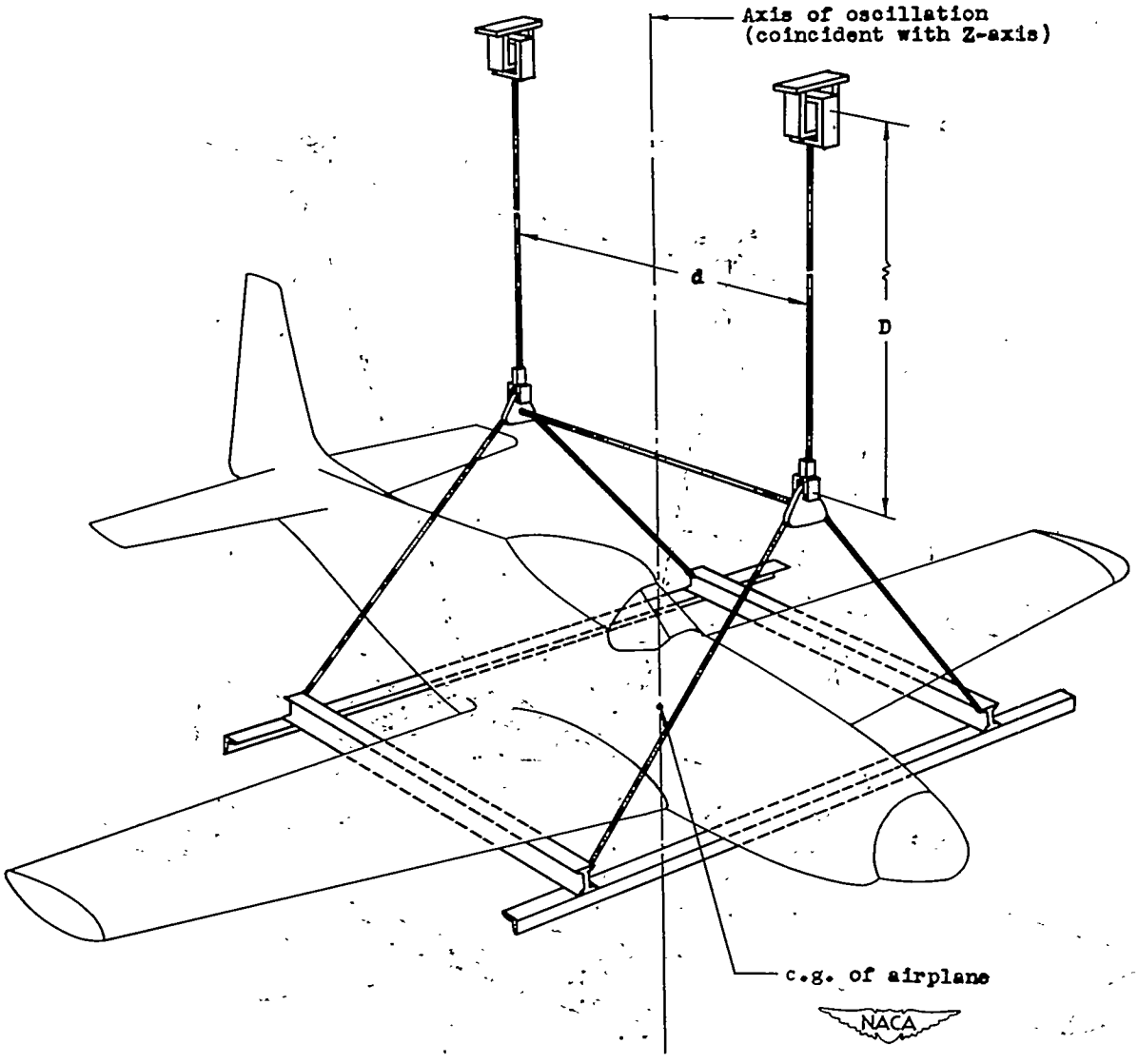

Figure 3.- Airplane and swinging gear arranged for the determination of the moment of inertia about the Z-axis by the bifilar torsion pendulum method.

Hasle 54-1802