TECH LIBRARY KAFB, NM
0144990

NACA TN No. 1658

8131

# NATIONAL ADVISORY COMMITTEE FOR AERONAUTICS

## TECHNICAL NOTE

No. 1658

# LATERAL STABILITY AND CONTROL CHARACTERISTICS OF A FREE-FLYING MODEL HAVING AN UNSWEPT WING WITH AN ASPECT RATIO OF 2

By Marion O. McKinney, Jr., and Robert E. Shanks

Langley Aeronautical Laboratory
Langley Field, Va.

Washington
July 1948

AFMDC
TECH

TECH LIBRARY KAFB, NM

0144990

NATIONAL ADVISORY COMMITTEE FOR AERONAUTICS

TECHNICAL NOTE NO. 1658

# LATERAL STABILITY AND CONTROL CHARACTERISTICS OF A FREE-FLYING MODEL HAVING AN UNSWEPT WING WITH AN ASPECT RATIO OF 2

By Marion O. McKinney, Jr., and Robert E. Shanks

## SUMMARY

Tests have been made in the Langley free-flight tunnel to determine the lateral stability, control, and general flying characteristics of a free-flying model having an unswept wing with an aspect ratio of 2. The tests were made at a lift coefficient of 1.0 and covered a range of geometric dihedral angles from $-20^{\circ}$ to $20^{\circ}$ and a range of vertical-tail areas from 0 to 15 percent of the wing area. The results of these tests were compared with the previously reported results of a similar series of tests on a conventional model having a wing with an aspect ratio of 6.

The general flight behavior of the low-aspect-ratio model was not so good as that of the conventional model for corresponding values of static directional stability and effective dihedral. The primary cause of the difference in the flight behavior of the models was the adverse yawing moments due to aileron deflection which, as would be expected from theory, were considerably larger for the low-aspect-ratio model than for the conventional model.

## INTRODUCTION

In the transonic and supersonic speed range, low-aspect-ratio unswept wings appear to offer some of the advantages of swept wings, particularly as regards drag. In addition, low-aspect-ratio unswept wings appear to have better static stability characteristics than swept wings in the high-lift-coefficient range and may offer some structural advantage over swept wings. Hence, a great deal of interest has been shown in the use of low-aspect-ratio unswept wings for high-speed airplanes.

An investigation has therefore been conducted in the Langley free-flight tunnel to provide some basic information on the effects of aspect ratio on the lateral stability and control characteristics of airplanes with unswept wings. Flight tests were made with a model having an unswept wing with an aspect ratio of 2. All of the flight tests were made at a lift coefficient of 1.0 and covered a range of dihedral angles from $-20^{\circ}$ to $20^{\circ}$ and vertical tail areas from 0 to 15 percent of the wing area. Sufficient combinations of dihedral angle and vertical tail area were covered to determine the effects of these parameters on lateral stability and control characteristics and general flying characteristics. The results of the flight tests are presented in the form of qualitative ratings of the oscillatory stability and general flight behavior of the model for each test condition.

The results of the flight tests of this model have been compared with those reported in reference 1 for a model having an unswept wing with an aspect ratio of 6. A few tests were made with a model having a delta wing with an aspect ratio of 2 for comparison with the model with the unswept low-aspect-ratio wing.

## SYMBOLS

All forces and moments are referred to the stability system of axes which are illustrated and defined in figure 1.

| | |
|---|---|
| $A$ | aspect ratio $\left(b^2/S\right)$ |
| $\Lambda$ | angle of sweepback of quarter-chord line, degrees |
| $\lambda$ | taper ratio (Tip chord/Root chord) |
| $W$ | weight of model, pounds |
| $m$ | mass of model, slugs |
| $I_X$ | moment of inertia of model about longitudinal body axis, slug-feet$^2$ |
| $I_Z$ | moment of inertia of model about vertical body axis, slug-feet$^2$ |
| $k_X$ | radius of gyration of model about longitudinal body axis, feet |
| $k_Z$ | radius of gyration of model about vertical body axis, feet |
| $S$ | wing area, square feet |

| | |
|---|---|
| $S_t$ | vertical-tail area, square feet |
| $l$ | tail length, feet |
| $b$ | wing span, feet |
| $c$ | local wing chord, feet |
| $\bar{z}$ | location of center of pressure of vertical tail above longitudinal body axis, feet |
| $V$ | airspeed, feet per second |
| $q$ | dynamic pressure, pounds per square foot $\left(\frac{1}{2}\rho V^2\right)$ |
| $R$ | Routh's discriminant |
| $p$ | rolling angular velocity, radians per second |
| $r$ | yawing angular velocity, radians per second |
| $\rho$ | mass density of air, slugs per cubic foot |
| $\alpha$ | angle of attack of longitudinal body axis, degrees |
| $\psi$ | angle of yaw, degrees |
| $\phi$ | angle of roll or bank, degrees |
| $\eta$ | inclination of principal longitudinal axis of inertia to flight path, degrees |
| $\gamma$ | angle of climb, degrees |
| $\beta$ | angle of sideslip, degrees |
| $\Gamma$ | geometric dihedral angle of mean-thickness line, degrees |
| $\delta_{a_R}$ | deflection of right aileron, degrees, positive for downward deflection |
| $\mu$ | airplane relative-density factor $\left(m/\rho Sb\right)$ |
| $L$ | rolling moment, foot-pounds |
| $M$ | pitching moment, foot-pounds |
| $N$ | yawing moment, foot-pounds |

$C_L$ lift coefficient (Lift/qS)

$C_l$ rolling-moment coefficient (Rolling moment/qSb)

$C_n$ yawing-moment coefficient (Yawing moment/qSb)

$C_{l_\beta}$ rate of change of rolling-moment coefficient with angle of sideslip per degree $(\partial C_l/\partial\beta)$

$C_{n_\beta}$ rate of change of yawing-moment coefficient with angle of sideslip per degree, except where otherwise noted $(\partial C_n/\partial\beta)$

$C_{n_p}$ rate of change of yawing-moment coefficient with rolling-angular-velocity factor $\left(\partial C_n/\partial \frac{pb}{2V}\right)$

$C_{l_p}$ rate of change of rolling-moment coefficient with rolling-angular-velocity factor $\left(\partial C_l/\partial \frac{pb}{2V}\right)$

$C_{l_r}$ rate of change of rolling-moment coefficient with yawing-angular-velocity factor $\left(\partial C_l/\partial \frac{rb}{2V}\right)$

$C_{n_r}$ rate of change of yawing-moment coefficient with yawing-angular-velocity factor $\left(\partial C_n/\partial \frac{rb}{2V}\right)$

$C_{Y_\beta}$ rate of change of lateral-force coefficient with angle of sideslip, per radian $\left(\partial C_Y/\partial\beta\right)$

## APPARATUS AND MODEL

The investigation was conducted in the Langley free-flight tunnel, which is equipped for testing free-flying dynamic airplane models. A complete description of the tunnel and its operation is given in reference 2.

The control used on free-flight-tunnel models is a "flicker" (full-on or full-off) system. During any one flight the control deflections in the full-on position are constant and the amount of control applied to the model is regulated by the length of time the controls are held on rather than by the magnitude of the deflections used.

Five models are discussed in the present paper. There were three geometrically different models: a model having an unswept wing with an aspect ratio of 2; a conventional model having an unswept wing with an aspect ration of 6; and a delta-wing model having a 45° sweptback wing with an aspect ratio of 2. The other two models consisted in changes of the mass characteristics of two of the basic models. For the sake of simplicity in discussion, the three geometrically different models are given by the following designations:

| Designation | Wing plan-form characteristics | | |
|---|---|---|---|
| | A | $\Lambda$ (deg) | $\lambda$ |
| Low-aspect-ratio model | 2 | 0 | 0.5 |
| Conventional model | 6 | 2 | .5 |
| Delta-wing model | 2 | 45 | .2 |

A three-view drawing of the low-aspect-ratio model is shown in figure 2. The effective dihedral of the model was varied by changing the geometric dihedral angle as indicated in figure 2. Five geometrically similar vertical tails were used with the model to vary the directional stability. The model had two interchangeable fuselage booms which provided for changes in the yawing moment of inertia $I_Z$. With the short boom, which did not extend forward of the wing, the model had a low yawing moment of inertia. When the long boom was used, the model had a relatively high yawing moment of inertia. The mass characteristics of the model for these two inertia configurations are given in table I.

The conventional model has been described in reference 1 which reports the results of free-flight tests of this model. A three-view sketch of the model is given in figure 3, and the mass characteristics are given in table I.

The delta-wing model was a tailless model, which was previously tested in the free-flight tunnel, with a boom-type fuselage added to provide a place to add the lead weights necessary for adjusting its moments of inertia to correspond to those of the low-aspect-ratio model. A three-view sketch of the delta-wing model is given in figure 4 and the mass characteristics of the model are given in table I. The controls of the model were of the type frequently called elevons; that is, they moved up or down together to serve as elevators and moved up and down differentially to serve as ailerons. No movable rudder was provided on this model.

## TESTS

Flight tests of the low-aspect-ratio model were made with each of the five vertical tails for dihedral angles of $-20^{\circ}$, $-10^{\circ}$, $0^{\circ}$, $10^{\circ}$, and $20^{\circ}$. All of these flight tests were made at a lift coefficient of 1.0. The values of $C_{l_\beta}$ and $C_{n_\beta}$ corresponding to each of the dihedral and vertical-tail combinations are shown in figure 5. The values of these stability derivatives were determined from force tests at $-5^{\circ}$ and $5^{\circ}$ yaw for the high-inertia model. Force tests of the low-inertia model for several configurations showed no appreciable difference between the values of $C_{l_\beta}$ and $C_{n_\beta}$ for the two models, so that the values of the derivatives were considered to be the same for both models for all the combinations of dihedral angle and vertical-tail area. All of the force tests were made at a dynamic pressure of 1.9 pounds per square foot which corresponded fairly closely to that of the flight tests.

The delta-wing model was flown at a lift coefficient of about 0.8 at each of the two loading conditions and force tests of the model were made to determine the values of the static stability derivatives $C_{n_\beta}$ and $C_{l_\beta}$.

The models were flown at each test condition by means of ailerons alone and ailerons coupled with rudder. The rudder deflections used were selected by visual observation of flight tests as the amount necessary to minimize the adverse yawing due to aileron deflection and rolling except in the case where the vertical tail was too small to counteract the adverse yawing. The stability and general flying characteristics of the model were noted by the pilot from visual observation and each test condition was assigned graduated ratings for oscillatory stability, lateral control, and general flight behavior. The criterions for judging these characteristics and the rating system used are given in table II.

The oscillatory stability characteristics were judged by the pilot from the damping of the lateral oscillations after a disturbance.

The lateral control characteristics were judged by the pilot from the response of the model in roll to application of the lateral controls.

The general flight-behavior ratings are based on the over-all flying characteristics of the model. The ratings indicate the ease with which the model can be flown, both for straight and level flight and for performance of the mild maneuver possible in the free-flight tunnel. In effect, then, the general flight-behavior ratings are much the same as the pilot's opinion or "feel" of an airplane.

## CALCULATIONS

Calculations were made by the method presented in reference 3 to determine the boundary for neutral stability of the lateral oscillations $(R = 0)$ of the low-aspect-ratio models. The mass characteristics used in the calculations are given in table I and the aerodynamic parameters used in the calculations are given in table III. The parameter $C_{Y_{\beta(tail)}}$ was varied systematically as the independent variable to provide the desired range of $C_{n_\beta}$ for determination of the stability boundaries in terms of $C_{n_\beta}$ and $C_{l_\beta}$.

## RESULTS AND DISCUSSION

In order to make the qualitative results of the present investigation easier to interpret, the results obtained with the low-aspect-ratio model have been compared with the results of a similar series of tests (reported in reference 1) on the conventional model which had an unswept wing with an aspect ratio of 6. Some of the results from reference 1 are presented herein to facilitate a comparison. Some additional flights were made with the conventional model during the present series of tests to insure that the qualitative flight ratings for the two models would be directly comparable.

The results of the two series of tests are compared in terms of the conventional stability derivatives $C_{n_\beta}$ and $C_{l_\beta}$. The values of these derivatives, however, are related to the aspect ratio since $C_n$ and $C_l$ are based on the product of the wing area and span. Thus for equal wing areas with the same value of yawing moment and rolling moment for the two models the values of the coefficients $C_n$ and $C_l$ are 1.73 times as great for the low-aspect-ratio model as for the high-aspect-ratio model. In order to eliminate this effect of aspect ratio on the stability derivatives from the comparison, the results of the two series of tests have also been compared on the basis of nondimensional stability derivatives based on the three-halves power of the area $\left(C_{n_\beta}\frac{b}{\sqrt{S}}\right.$ and $\left.C_{l_\beta}\frac{b}{\sqrt{S}}\right)$.

### Oscillatory Stability

The oscillatory stability characteristics of the low-aspect-ratio models are presented in figure 6, which shows the qualitative oscillatory

stability ratings as functions of the effective-dihedral parameter $C_{l_\beta}$ and directional-stability parameter $C_{n_\beta}$ for the two moment-of-inertia conditions.

An increase in the effective dihedral or a decrease in the directional stability caused a reduction in the oscillatory stability as would be expected from previous experimental and theoretical studies. An increase in the moments of inertia from the low-inertia to high-inertia configuration was found to cause a slight decrease in the stability of the lateral oscillation. This result is illustrated in figure 6 which shows a slightly larger range of stable (A rating) combinations of $C_{l_\beta}$ and $C_{n_\beta}$ for the low-inertia configuration.

Inasmuch as the model was stable in all of the configurations covered in the flight tests, no direct comparison of the experimental results and the calculated stability boundaries, shown in figure 6, could be obtained. The experimental data, however, are in qualitative agreement with the results indicated by the calculated stability boundaries which show a larger range of combinations of $C_{l_\beta}$ and $C_{n_\beta}$ for stability for the low-inertia configuration.

Inasmuch as the oscillatory stability of the conventional model (A = 6) was judged on a somewhat different basis from that used in the investigation of the present model (A = 2), it was not possible to compare directly the oscillatory stability characteristics of the two models. At a given distance from the calculated stability boundary in terms of $C_{n_\beta}$ and $C_{l_\beta}$ or in terms of $C_{n_\beta}\frac{b}{\sqrt{S}}$ and $C_{l_\beta}\frac{b}{\sqrt{S}}$, however, it appeared that oscillatory stability of the low-aspect-ratio models was not so good as that of the conventional model.

## Lateral Control

The lateral control characteristics of the low-aspect-ratio and conventional models are given in figures 7 and 8, which show the qualitative lateral-control ratings as functions of the effective-dihedral parameter $C_{l_\beta}$ and directional-stability parameter $C_{n_\beta}$. The control ratings for the case of coupled ailerons and rudder are shown in figure 7, and the control ratings for the case of control by ailerons alone are shown in figure 8. The lateral control characteristics of the conventional model (A = 6) were not presented in reference 1 and were especially prepared for the present paper from the pilot's comments recorded during the tests of that model.

When ailerons and rudder were coupled for lateral control (fig. 7), the lateral control characteristics of the low-aspect-ratio and conventional models were about equally good if the directional stability was high. When the directional stability was low, however, the lateral control characteristics of the low-aspect-ratio models were poorer than those of the conventional model.

For the case of control with coupled ailerons and rudder, the poor control characteristics of the low-aspect-ratio models with low directional stability may be attributed to the high adverse yawing moments due to aileron deflection and the relatively large part of the directional stability provided by the wing at a lift coefficient of 1.0. Because of the relatively high directional stability of the wing, the vertical-tail area required to obtain a given amount of directional stability was smaller for the low-aspect-ratio models than for the conventional model and therefore the yawing moments which could be provided by the rudder were likewise smaller for the low-aspect-ratio models. The small yawing moments available from the rudder when combined with the high adverse yawing moments due to aileron deflection made it difficult to counteract the adverse yawing by means of the rudder.

The high adverse yawing moments of the ailerons are illustrated in figure 9, which shows the results of force tests made to determine the rolling and yawing moments of the ailerons for the low-aspect-ratio and conventional models. These high adverse yawing moments for the low-aspect-ratio model are in reasonably good agreement with extrapolations of the theoretical data presented in reference 4. Both of the models were flown with 30° total aileron travel $(\pm 15^{\circ})$ which gave satisfactory rolling velocity for rolls with no yawing $\left(\text{maximum } \frac{pb}{2V} \approx 0.10 \text{ for both models}\right)$. For this case the ailerons of the low-aspect-ratio model produced about three times as much yawing-moment coefficient as did those of the conventional model. No rudder effectiveness data were obtained with the low-aspect-ratio models but an estimate of the rudder yawing moment was made. This estimate indicated that the yawing moment due to maximum rudder deflection for the smallest vertical tail $\left(\frac{S_t}{S} = 0.025\right)$ was slightly less than the adverse yawing moment produced by the ailerons. Thus, it is apparent that the lateral control characteristics of the low-aspect-ratio model would be poor with the smallest vertical tail, especially when the effective dihedral was relatively high because the rudder would not be able to prevent adverse yawing which would cause a reduction in the rolling effectiveness of the ailerons.

When only the ailerons were used for lateral control (fig. 8) the low-aspect-ratio models had less satisfactory lateral control characteristics than the conventional model. This difference in the lateral control characteristics of the conventional and low-aspect-ratio models was apparently caused entirely by the adverse yawing moments due to aileron deflection, which were greater for the low-aspect-ratio models.

Thus, with a given amount of directional stability, the adverse yawing moments due to aileron deflection caused the low-aspect-ratio models to yaw to larger angles than the conventional model. Hence, the same amount of effective dihedral caused more serious adverse rolling moments to oppose those due to the ailerons for the low-aspect-ratio models than for the conventional model.

The low-aspect-ratio models could be controlled fairly well with the rudder alone when the value of $-C_{l_\beta}$ exceeded 0.002. When the value of $-C_{l_\beta}$ was less than 0.002 but greater than zero, it was possible to pick up a wing by means of rudder alone although the control by rudder alone was not satisfactory for a primary control. This result is the same as was obtained for the conventional model.

Varying the moment of inertia had very little effect on lateral control over the range covered in the tests of the two low-aspect-ratio models.

## General Flight Behavior

The general flight-behavior ratings assigned by the pilot during the tests are presented in figures 10 and 11 along with similar data for the conventional model taken from reference 1. The general flight-behavior ratings are believed to be the most important results obtained from the tests inasmuch as they are an indication of the over-all flying qualities of the model. The results presented in figures 10 and 11 are therefore summarized in somewhat simpler form in figures 12 and 13 for more convenient use.

The general flight behavior of the low-aspect-ratio models was not so good as that of the conventional model when compared on the basis of $C_{n_\beta}$ and $C_{l_\beta}$ or on the basis of $C_{n_\beta}\frac{b}{\sqrt{S}}$ and $C_{l_\beta}\frac{b}{\sqrt{S}}$. The main cause of the less satisfactory flight behavior of the low-aspect-ratio models was the presence of the large adverse yawing moments produced by aileron deflection. These large adverse yawing moments affected the flight behavior in different ways depending upon the values of $C_{n_\beta}$ and $C_{l_\beta}$. As previously explained, these large adverse yawing moments caused the adverse effects of increasing dihedral on lateral control to be more pronounced on the low-aspect-ratio model for aileron-alone control. With a given amount of directional stability (in terms of either $C_{n_\beta}$ or $C_{n_\beta}\frac{b}{\sqrt{S}}$) the low-aspect-ratio model yawed to larger angles than the conventional model as a result of the aileron deflection. These large yawing motions were objectionable in themselves even when the effective dihedral was low and no appreciable adverse rolling moments occurred. The large adverse aileron yawing moments also required the use

of a larger tail on the low-aspect-ratio model than on the conventional model to produce enough rudder yawing moment to counteract the aileron yawing moment. Another reason that the general flight behavior of the low-aspect-ratio model was not so good as that of the conventional model was that, with a given amount of directional stability, it developed larger-amplitude yawing motions as a result of gust or control disturbances and these yawing motions were harder to stop even when the rudder and ailerons were both used for control.

With a given amount of directional stability and effective dihedral the general flight behavior of the low-aspect-ratio models appeared to be less satisfactory than that of delta-wing models of the same aspect ratio which were previously tested in the Langley free-flight tunnel. The aerodynamic stability derivatives of the two models appeared to be similar except that unpublished data indicated that the yawing moment due to rolling $\left(\text{as indicated by the stability derivative } C_{n_p}\right)$ was unfavorable for the low-aspect-ratio models and favorable for delta-wing models. The only other apparent difference between these models was in the mass characteristics. A few flight tests were therefore made with a delta-wing model having its moments of inertia increased to about the same values as those of the low-aspect-ratio models. From these tests it was possible to show the effect of the stability derivative $C_{n_p}$ on the flight behavior at values of $C_{n_\beta}$ and $C_{l_\beta}$ of about 0.0020 and -0.0024, respectively. The delta-wing model did not have a rudder, and the following comparison is for the case of control by means of ailerons alone:

| $I_Z$ | Model configuration | General flight-behavior rating |
|---|---|---|
| Low | Low aspect ratio | Poor |
| | Delta wing | Fair |
| High | Low aspect ratio | Flight impossible |
| | Delta wing | Poor |

It is evident from these data that the general flight behavior of the low-aspect-ratio model was less satisfactory than that of the delta-wing model for the same values of $C_{n_\beta}$ and $C_{l_\beta}$ when only the ailerons were used for control. Favorable yawing due to rolling is evidently a desirable feature.

Increasing the moments of inertia of the low-aspect-ratio models caused the general flight behavior to become slightly less satisfactory when both the ailerons and rudder were used for lateral control. When

the ailerons alone were used for control there was virtually no effect of increasing the moments of inertia when the effective dihedral was high, in which case the effect of adverse yawing on lateral control determined the general flight behavior. When the effective dihedral was low, however, the model with the higher moments of inertia required a considerably larger value of $C_{n_\beta}$ to be flyable. This characteristic was caused by the large-amplitude long-period yawing oscillations which developed when the directional stability was low. These yawing oscillations could not be stopped by use of the ailerons alone because the adverse yawing moments of the ailerons reinforced the yawing motion.

In order to obtain good general flight behavior with the low-aspect-ratio models at a lift coefficient of 1.0 the present tests indicate that the following conditions should be satisfied:

(1) The directional stability parameter $C_{n_\beta}$ should be greater than 0.006.

(2) The ratio $-C_{l_\beta}/C_{n_\beta}$ should be less than 1/3.

The Army, Navy, and NACA flying-qualities requirements and the data of reference 1 indicate that a third condition which should also be satisfied is that the effective-dihedral parameter should be positive $\left(-C_{l_\beta} > 0\right)$. The data on the effect of lift coefficient in reference 1 indiate that, if the lift coefficient is less than 1.0, any configuration which satisfied these conditions would have good flight behavior. If the lift coefficient were greater than 1.0, however, a somehwat higher value of $C_{n_\beta}$ and a slightly lower value of the ratio $-C_{l_\beta}/C_{n_\beta}$ would be required for good general flight behavior.

## CONCLUSIONS

Tests were made in the Langley free-flight tunnel to determine the lateral stability, control, and general flying characteristics of a free-flying model having a wing with an aspect ratio of 2. The tests covered a range of values of geometric dihedral angle and vertical-tail area and the results were compared with those of a similar series of tests on a conventional model having a wing with an aspect ratio of 6. The following conclusions were drawn in this investigation:

1. The general flight behavior of the low-aspect-ratio model was not so good as that of the conventional model for corresponding values of static directional stability and effective dihedral.

2. The main reason that the flight behavior of the low-aspect-ratio models was not so good as that of the conventional model was that the ailerons of the low-aspect-ratio model produced very large adverse yawing moments as would be expected from theory. These large adverse yawing moments caused the following effects:

(a) The unfavorable effect of increasing the effective dihedral on the lateral control to be more pronounced on the low-aspect-ratio model than on the conventional model

(b) Large-amplitude, long-period yawing oscillations (when the directional stability was low) which could not be stopped by use of the ailerons alone

(c) A larger vertical tail to be required to provide sufficient rudder yawing moment to counteract the adverse aileron yawing moment

3. In order to obtain the best flying characteristics at a lift coefficient of 1.0 the following conditions should be satisfied:

(a) The effective-dihedral parameter should be positive $\left(-C_{l_\beta} > 0\right)$.

(b) The directional-stability parameter $C_{n_\beta}$ should be greater than 0.006.

(c) The ratio $-C_{l_\beta}/C_{n_\beta}$ should be less than 1/3. For lift coefficients above 1.0 the minimum value of $C_{n_\beta}$ would be somewhat greater and the maximum value of the ratio $-C_{l_\beta}/C_{n_\beta}$ would be slightly smaller.

Langley Memorial Aeronautical Laboratory
National Advisory Committee for Aeronautics
Langley Field, Va., April 19, 1948

## REFERENCES

1. McKinney, Marion O., Jr.: Experimental Determination of the Effects of Dihedral, Vertical-Tail Area, and Lift Coefficient on Lateral Stability and Control Characteristics. NACA TN No. 1094, 1946.

2. Shortal, Joseph A., and Osterhout, Clayton J.: Preliminary Stability and Control Tests in the NACA Free-Flight Wind Tunnel and Correlation with Full-Scale Flight Tests. NACA TN No. 810, 1941.

3. Sternfield, Leonard: Effect of Product of Inertia on Lateral Stability. NACA TN No. 1193, 1947.

4. Pearson, Henry A., and Jones, Robert T.: Theoretical Stability and Control Characteristics of Wings with Various Amounts of Taper and Twist. NACA Rep. No. 635, 1938.

TABLE I

MASS CHARACTERISTICS OF MODEL CONFIGURATIONS

| | Low-aspect-ratio model | | Conventional model | Delta-wing model | |
|---|---|---|---|---|---|
| | $A = 2;\ \Lambda = 0^{\circ}$ | | $A = 6;$ $\Lambda = 2^{\circ}$ | $A = 2;\ \Lambda = 45^{\circ}$ | |
| | High inertia | Low inertia | | High inertia | Low inertia |
| $W$ | 6.45 | 5.45 | 6.63 | 4.80 | 3.27 |
| $\mu$ | 13.60 | 11.50 | 8.10 | 10.[illegible]0 | 7.35 |
| $I_X$ | .0334 | .0232 | .0830 | .0232 | .0232 |
| $I_Z$ | .2200 | .1057 | .1920 | .2200 | .1057 |
| $k_X/b$ | .180 | .160 | .161 | .174 | .211 |
| $k_Z/b$ | .455 | .342 | .241 | .535 | .450 |

TABLE II

QUALITATIVE FLIGHT RATINGS

Oscillatory Stability

| Rating | Qualitative rating | Approximate quantitative equivalent |
|---|---|---|
| A | Stable | Oscillation damps completely in less than 3 cycles |
| B | Slightly stable | Oscillation damps completely in more than 3 cycles |
| C | Neutral | Zero damping |

Lateral Control

| Rating | Qualitative rating | Approximate quantitative equivalent |
|---|---|---|
| A | Good | Rolls in proper direction with little decrease in $pb/2V$ after maximum is reached |
| B | Fair | Rolls in proper direction but $pb/2V$ falls off considerably after maximum is reached |
| C | Poor | Rolls in proper direction initially but $pb/2V$ approaches zero or reverses later |
| D | Reversed | Rolls wrong way as soon as controls are applied |

General Flight Behavior

| Rating | Qualitative rating | Approximate equivalent as regards flying qualities |
|---|---|---|
| A | Good | Satisfactory flying qualities |
| B | Fair | Flying qualities appear marginal although airplane should be relatively safe |
| C | Poor | Flying qualities unsatisfactory; airplane might be unsafe |
| D | Flight impossible | Flying qualities definitely unsatisfactory; sustained flights with model are not possible |

NACA

TABLE III

AERODYNAMIC PARAMETERS OF MODEL USED IN CALCULATIONS

[$\beta$ is measured in radians]

| Parameter | Value |
|---|---|
| $\eta$, deg | 20 |
| $\gamma$, deg | − 15 |
| $C_L$ | 1.00 |
| $C_{Y_\beta}$ | $-0.138 + C_{Y_{\beta(tail)}}$ |
| $C_{n_\beta}$ | $0.043 - 0.865\ C_{Y_{\beta(tail)}}$ |
| $C_{l_p}$ | − 0.150 |
| $C_{n_p}$ | $-0.025 + 0.488\ C_{Y_{\beta(tail)}} + 0.224\left(-C_{Y_{\beta(tail)}}\right)^{3/2}$ |
| $C_{l_r}$ | $0.220 + 0.488\ C_{Y_{\beta(tail)}} + 0.224\left(-C_{Y_{\beta(tail)}}\right)^{3/2}$ |
| $C_{n_r}$ | $-0.080 + 1.498\ C_{Y_{\beta(tail)}}$ |

NACA

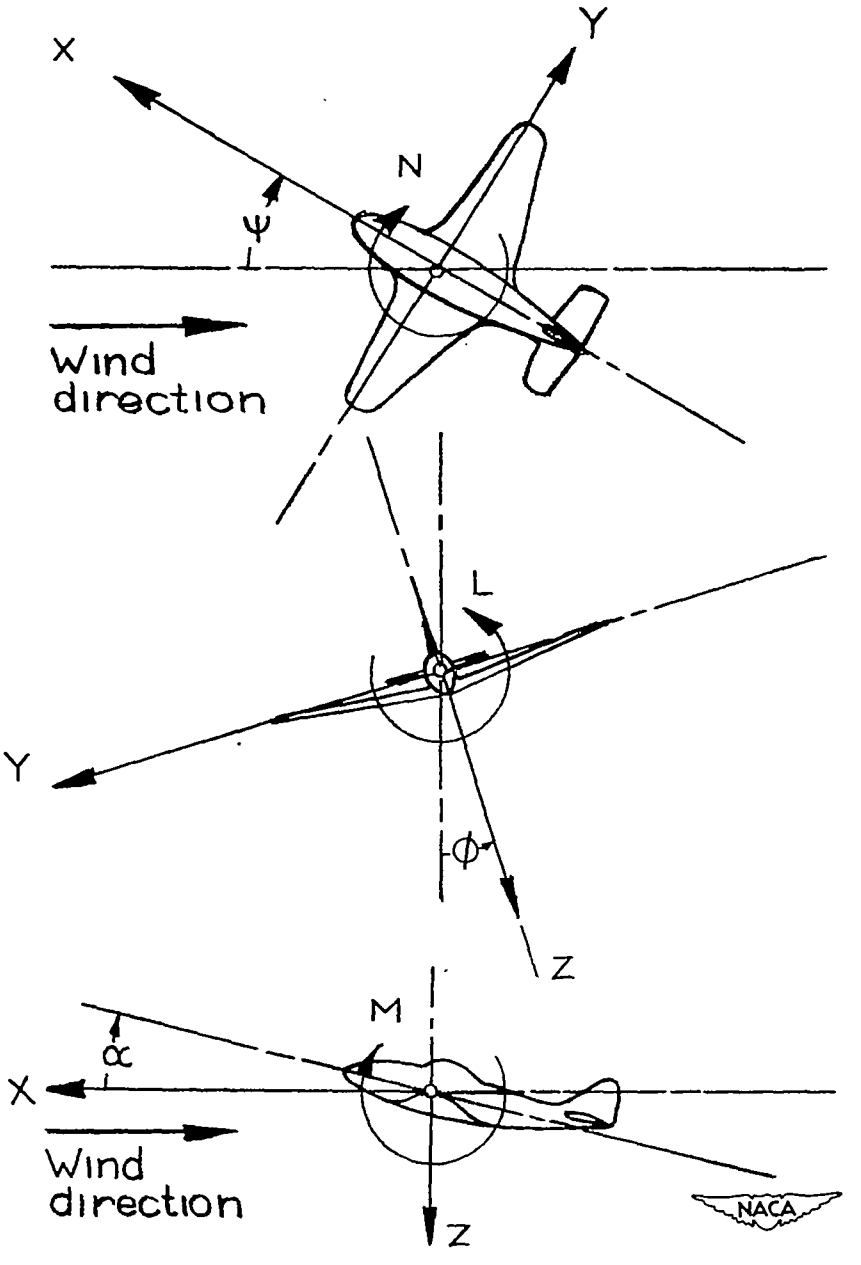


Figure 1.- The stability system of axes; arrows indicate positive direction of moments and forces. This system of axes is defined as an orthogonal system having their origin at the center of gravity and in which the Z-axis is in the plane of symmetry and perpendicular to the relative wind, the X-axis is in the plane of symmetry and perpendicular to the Z-axis, and the Y-axis is perpendicular to the plane of symmetry.

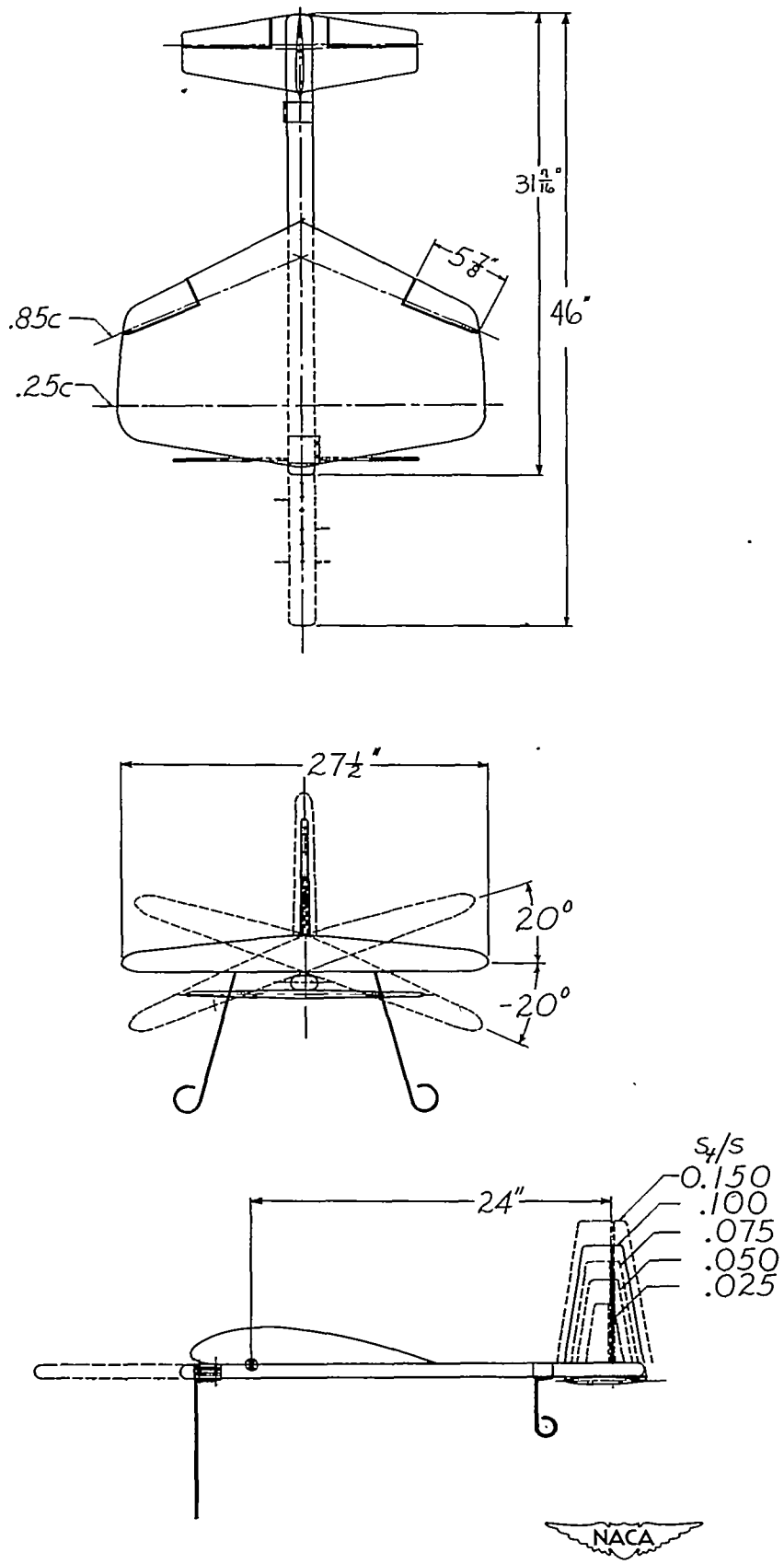


Figure 2.- Three-view sketch of the low-aspect-ratio model. A = 2.

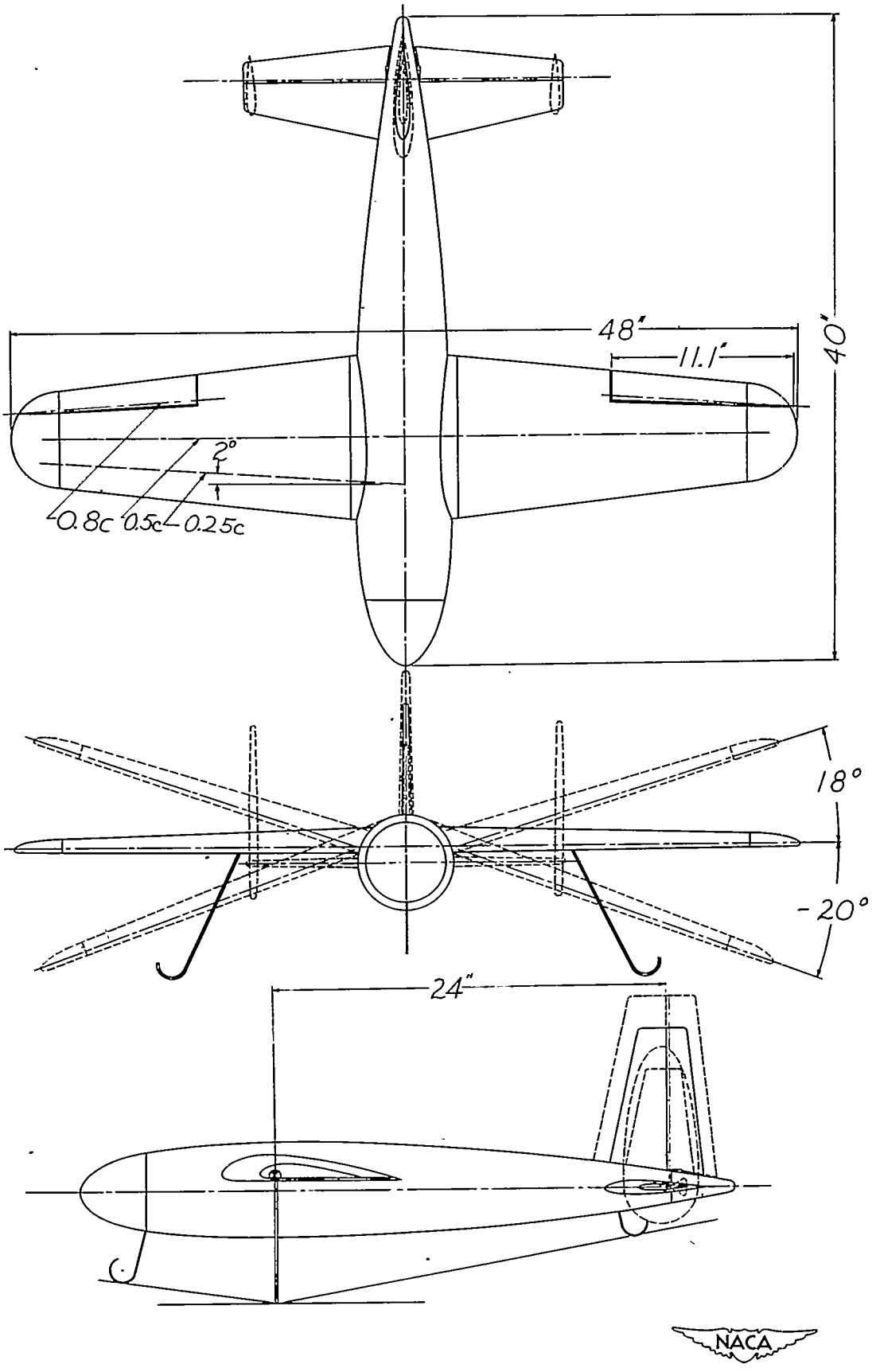


Figure 3.- Three-view sketch of the conventional model. A = 6.

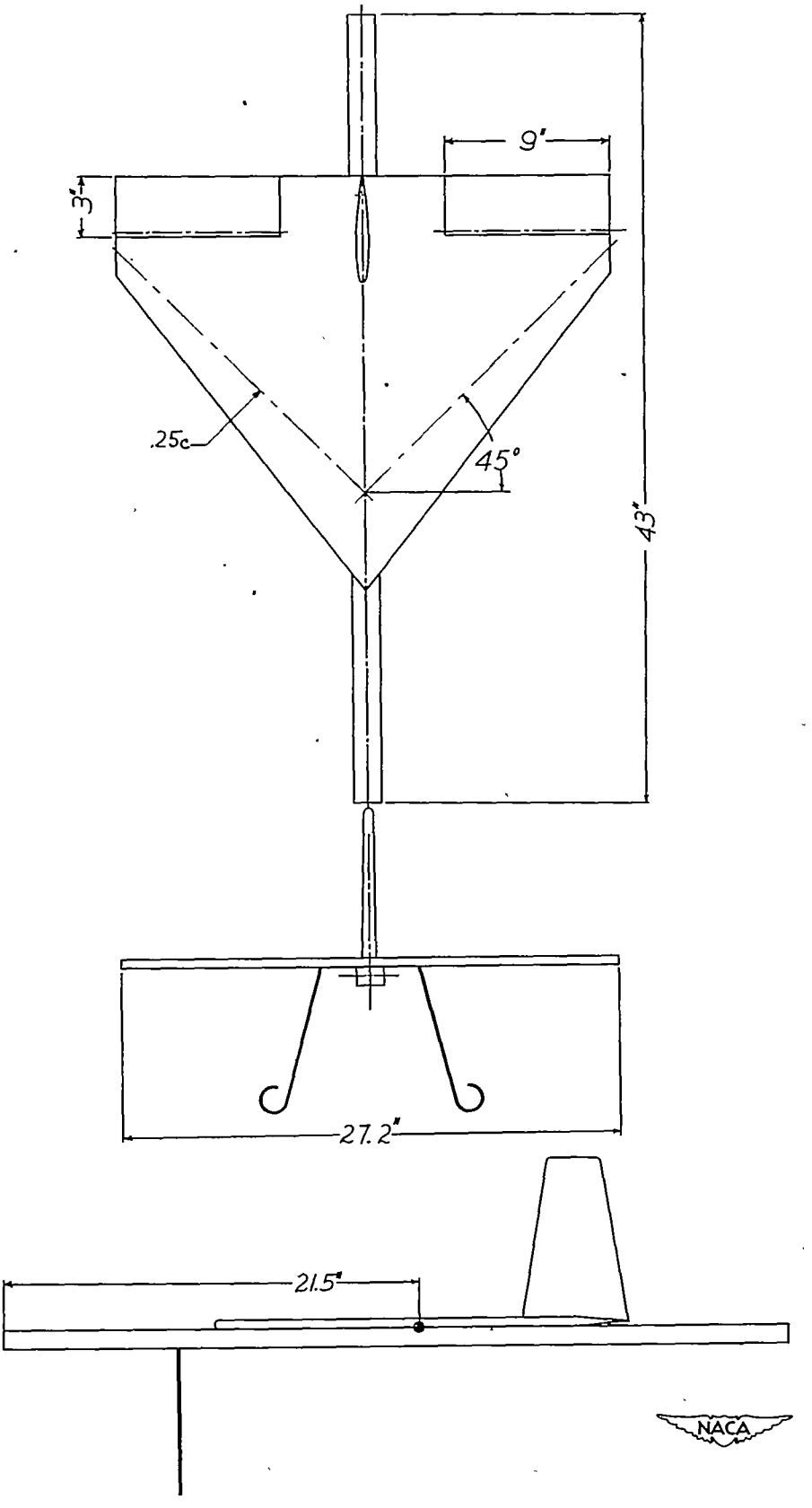


Figure 4.- Three-view sketch of the delta wing model. A = 2.

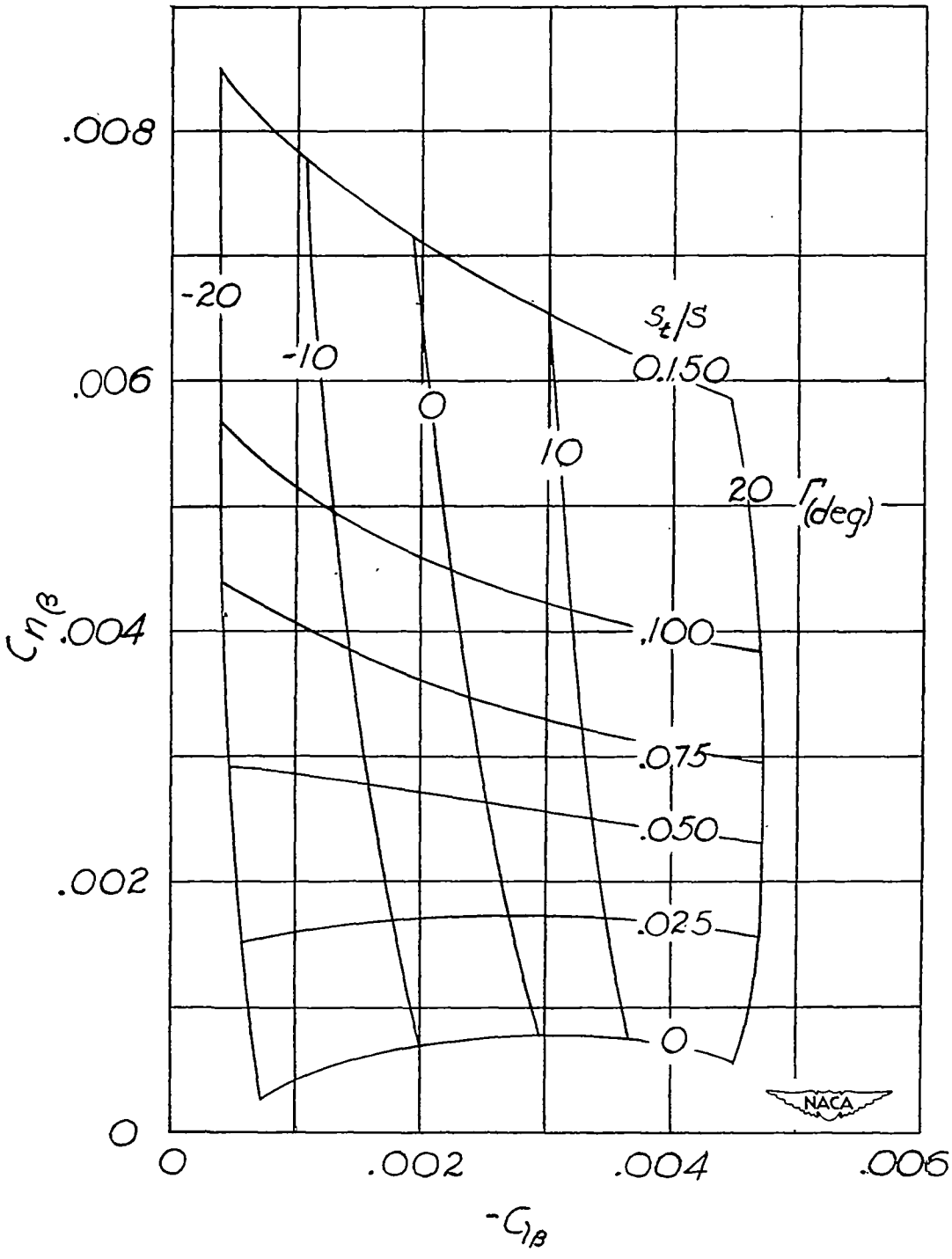


Figure 5.- Values of static directional stability and effective dihedral derivatives corresponding to various combinations of dihedral angle and vertical-tail area.

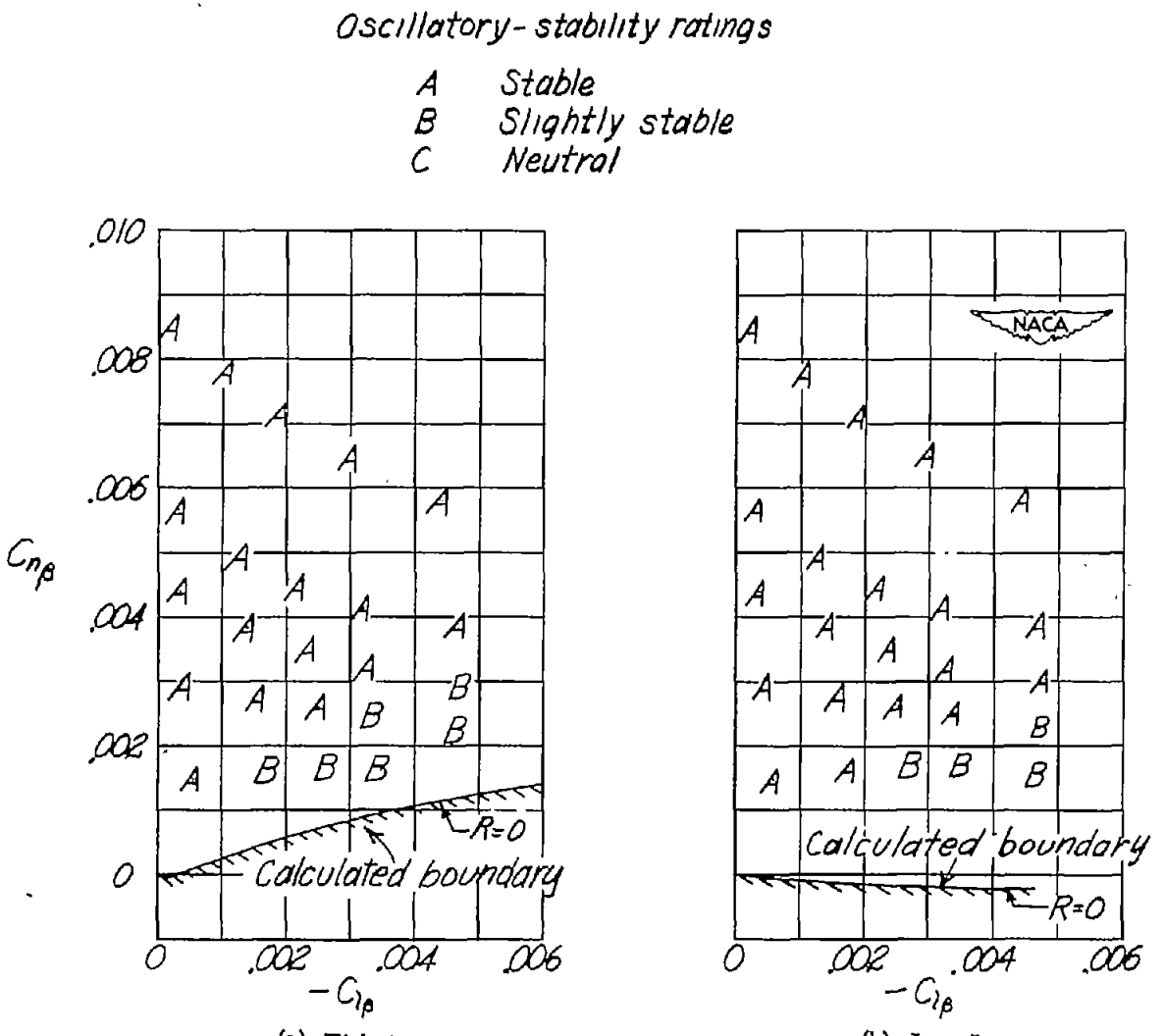


(a) High $I_Z$.

(b) Low $I_Z$.

Figure 6.- Oscillatory stability characteristics of the low-aspect-ratio model.

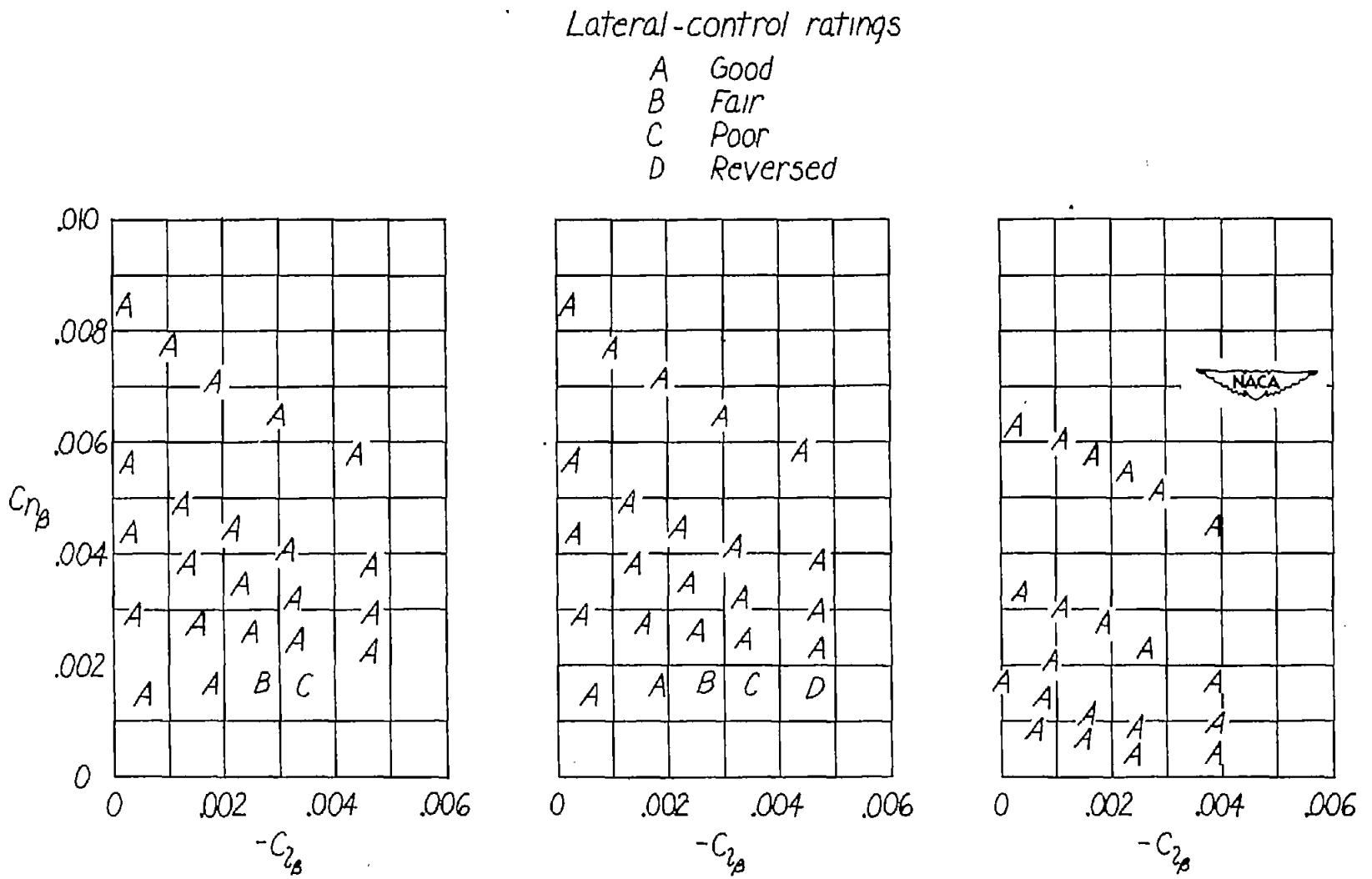


(a) A = 2; high $I_Z$.

(b) A = 2; low $I_Z$.

(c) A = 6.

Figure 7.- Lateral-control ratings for control with ailerons and rudder.

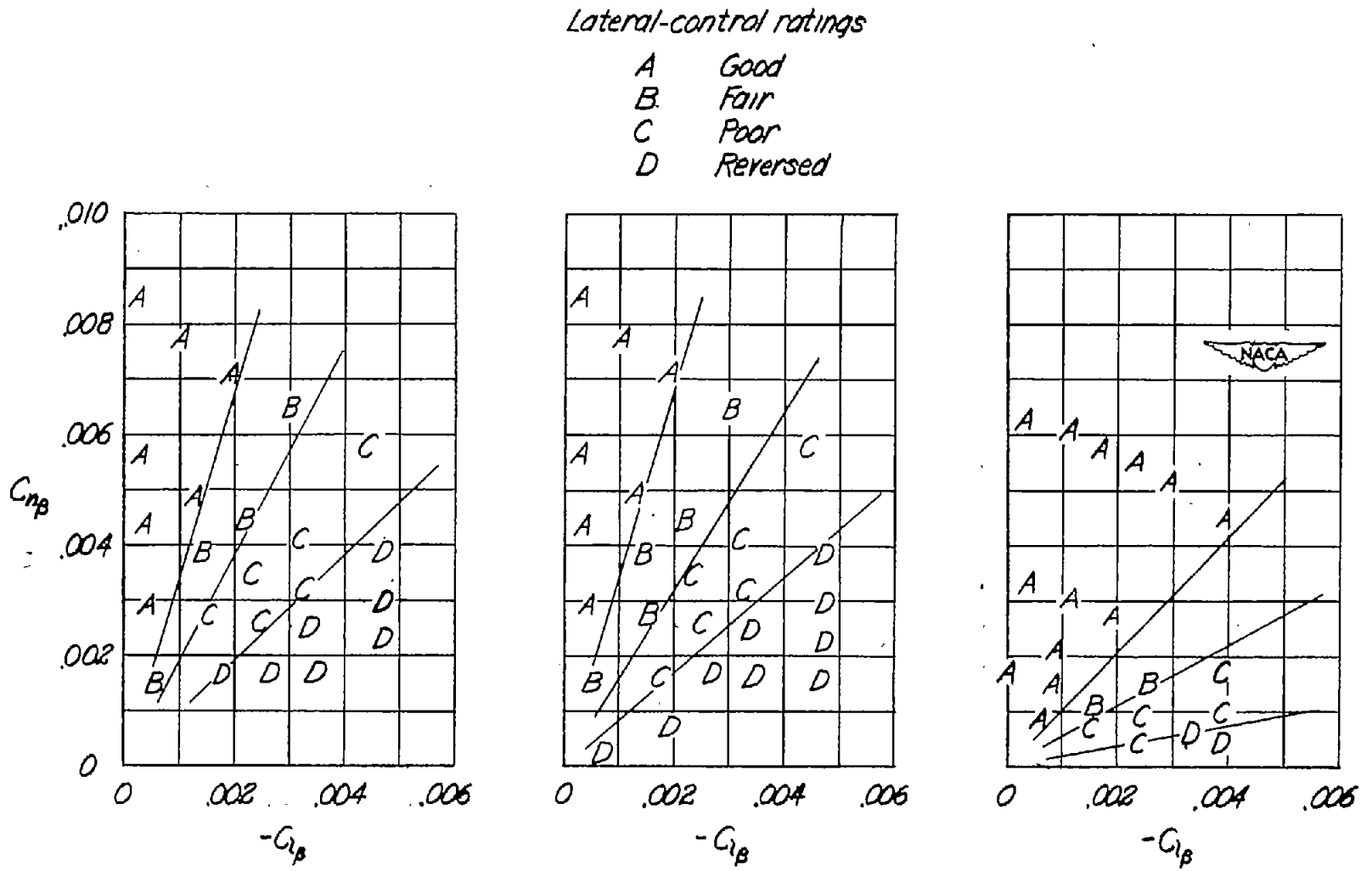


(a) A = 2; high $I_Z$.

(b) A = 2; low $I_Z$.

(c) A = 6.

Figure 8.- Lateral-control ratings for control with ailerons alone.

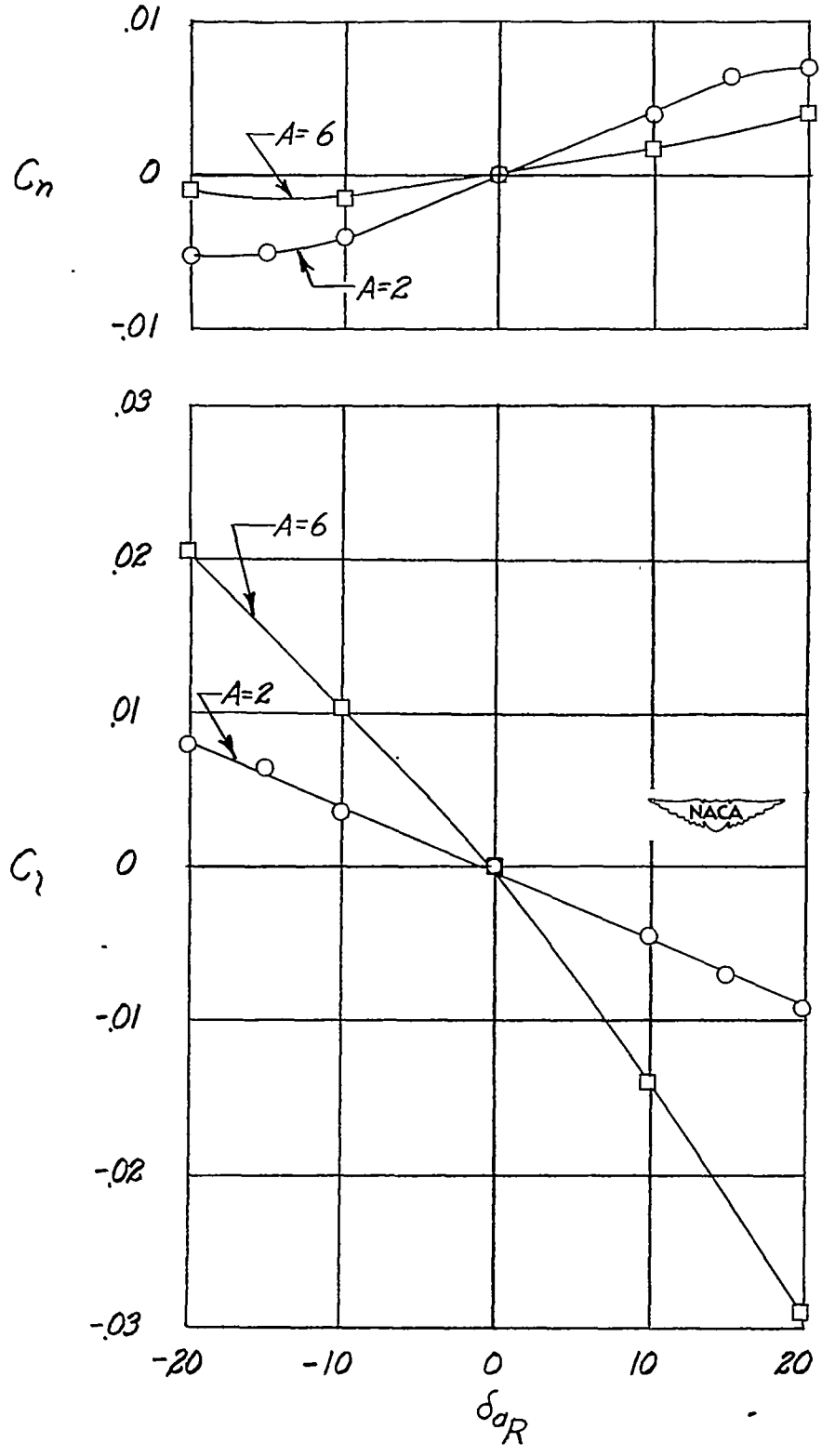


Figure 9.- Aileron effectiveness for the conventional and low-aspect-ratio models.

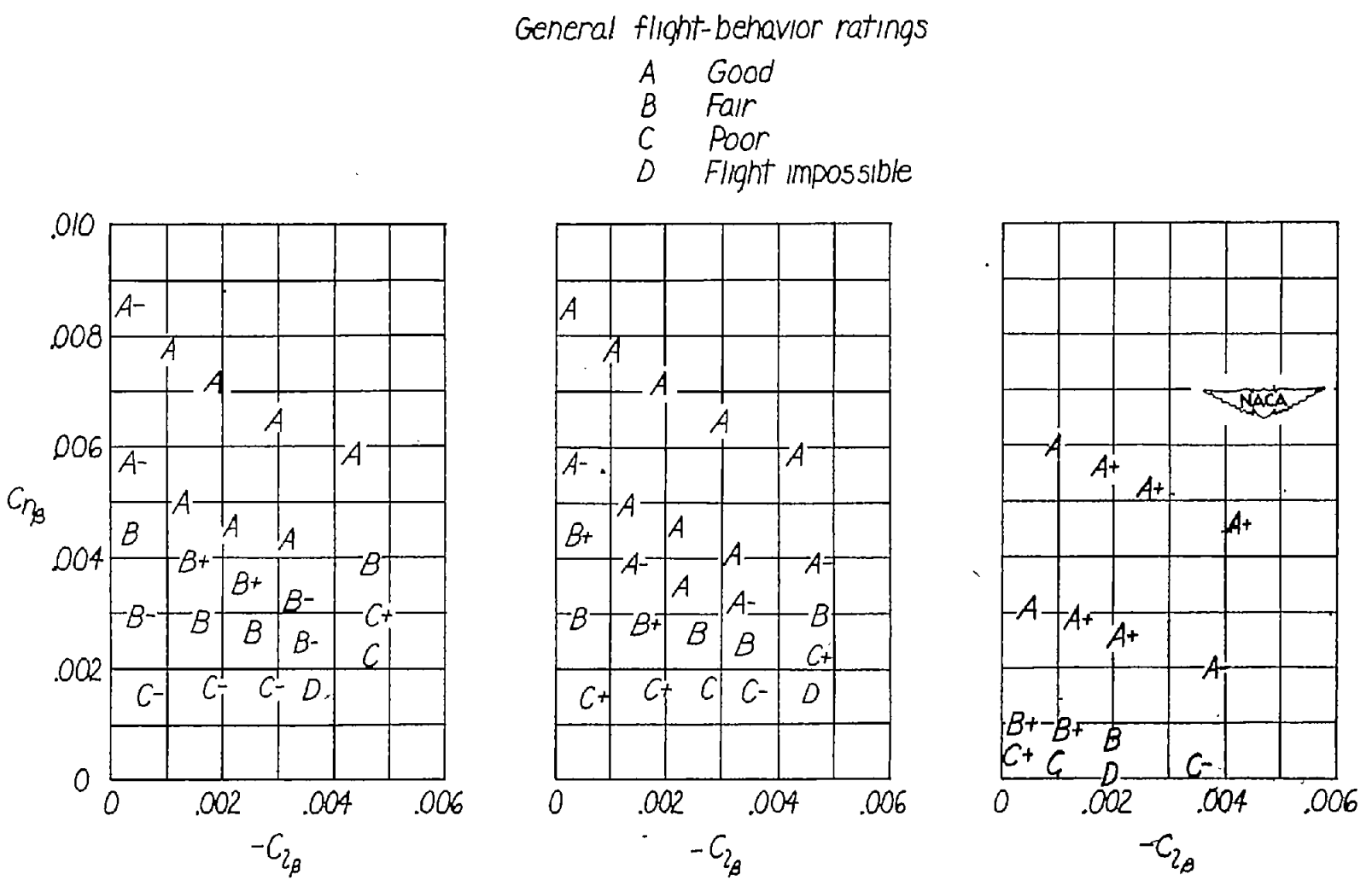


(a) A = 2; high $I_Z$.

(b) A = 2; low $I_Z$.

(c) A = 6.

Figure 10.- General flight-behavior ratings for control with ailerons and rudder.

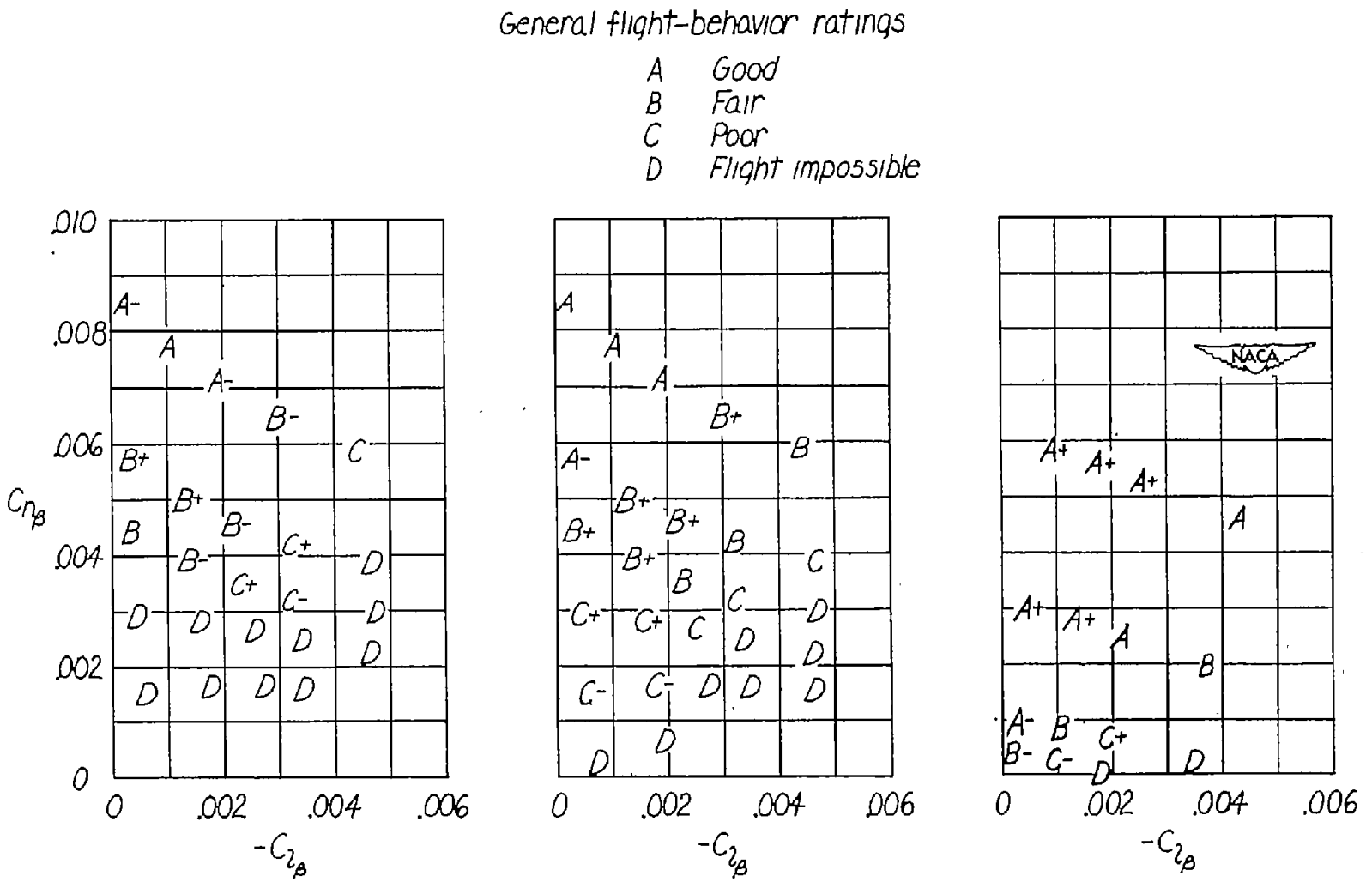


(a) A = 2; high $I_Z$.

(b) A = 2; low $I_Z$.

(c) A = 6.

Figure 11.- General flight-behavior ratings for control with ailerons alone.

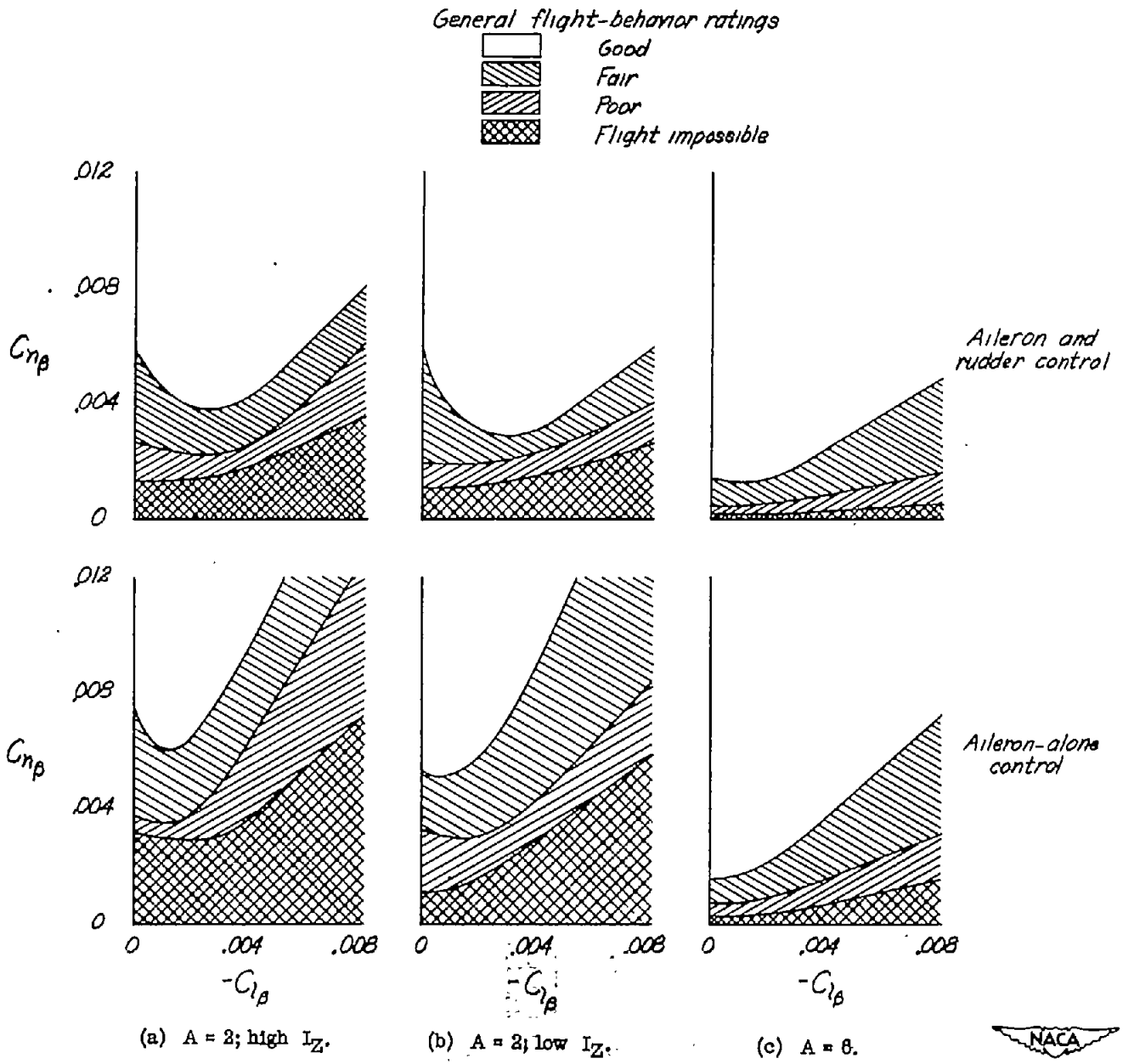


Figure 12.- Summary of the general flight behavior of the models presented as functions of the conventional static stability derivatives.

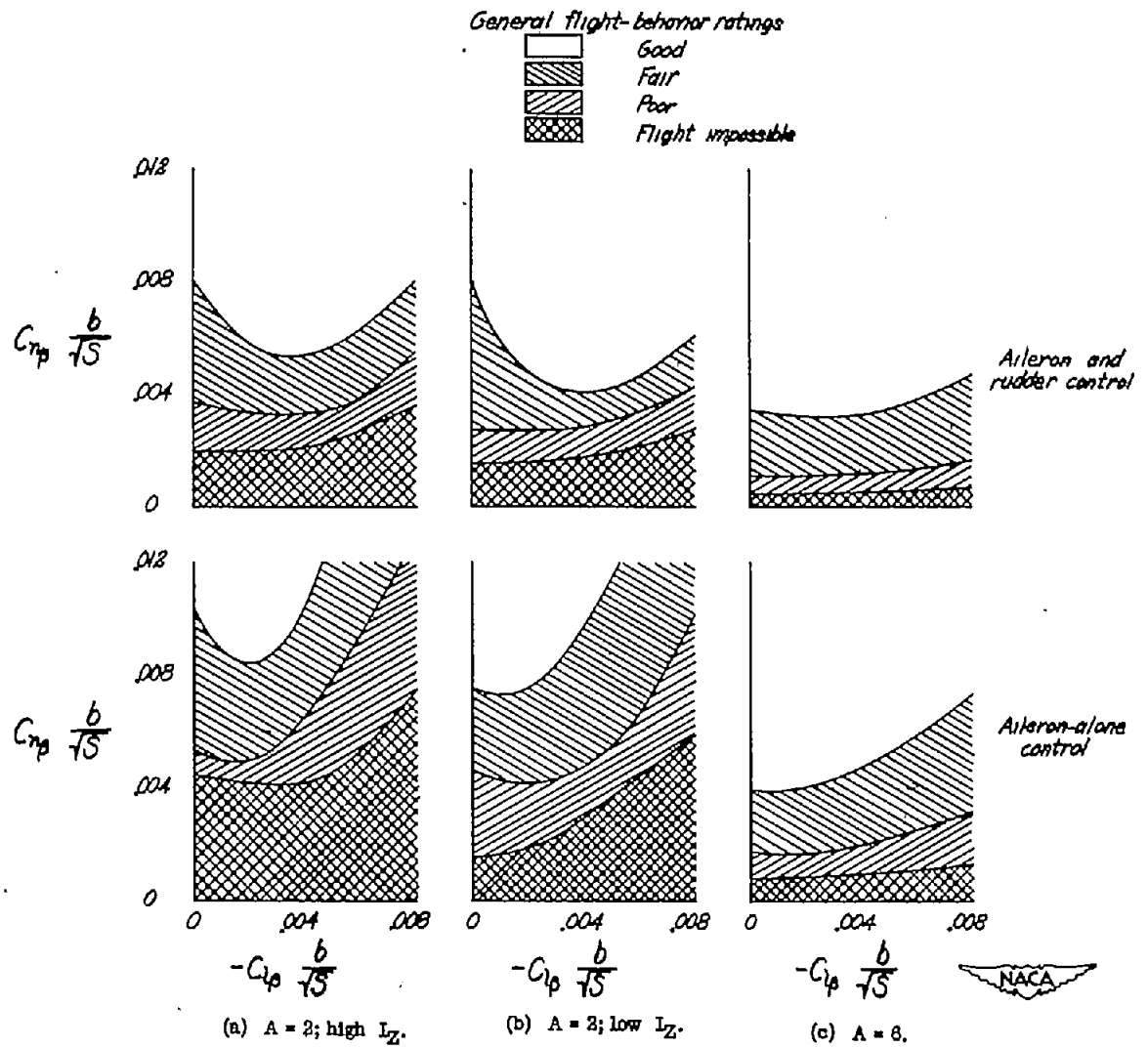


Figure 13.- Summary of the general flight behavior of the models presented as functions of static stability derivatives which are not affected by aspect ratio.