A'SST Section Copy No. 1

NATIONAL ADVISORY COMMITTEE FOR AERONAUTICS

TECHNICAL NOTE

No. 1659

METHOD FOR CALCULATION OF PRESSURE DISTRIBUTIONS ON THIN CONICAL BODIES OF ARBITRARY CROSS SECTION IN SUPERSONIC STREAM

By Stephen H. Maslen

Flight Propulsion Research Laboratory
Cleveland, Ohio

Washington
July 1948

NATIONAL ADVISORY COMMITTEE FOR AERONAUTICS

TECHNICAL NOTE No. 1659

METHOD FOR CALCULATION OF PRESSURE DISTRIBUTIONS ON THIN CONICAL BODIES OF ARBITRARY CROSS SECTION IN SUPERSONIC STREAM

By Stephen H. Maslen

SUMMARY

An approximate method is presented for calculating the pressure distribution on conical bodies of noncircular cross section in a supersonic flow field. By a superposition of elementary conical flows due to line sources, the flow about an arbitrary cone may be described. Illustrations of the pressure distribution about several shapes are included to demonstrate the method. The problem of such a body at angle of attack may also be solved by the same method, as well as the problem of yawed flight at angle of attack.

INTRODUCTION

Linearized methods have been applied to determine solutions of the supersonic flow field about both solid and open-nosed bodies of revolution. (See references 1 to 4.) The methods of reference 1 have been extended herein to produce a linearized solution for cones of arbitrary cross section, such as might serve as forebodies of nonsymmetrical fuselages. The solution is based on the use of a combination of line sources inclined arbitrarily to the flow direction. If the proper sources are chosen, any conical body shape can be described and the resulting surface pressures can be calculated.

The method presented herein was devised during the fall of 1947 at the NACA Cleveland laboratory.

SYMBOLS

The following symbols are used in this analysis:

C_p pressure coefficient

c,d semi-axes of ellipse

K constant proportional to source strength

M free-stream Mach number

m slope of line source with respect to flow direction

R component, normal to flow direction, of distance from point on line source to arbitrary point in flow field

U free-stream velocity

U_n component of total velocity normal to body at surface

U_r radial (cylindrical coordinate) perturbation-velocity component

U_x axial perturbation-velocity component

U_θ tangential (cylindrical coordinate) perturbation-velocity component

x,r,θ cylindrical coordinates

β cotangent of Mach angle, $\sqrt{M^2 - 1}$

δ angular position of line source, measured from $\theta = \pi/2$ plane

λ angle between radial velocity and normal to body, measured in x = constant plane

ν angle whose tangent is ratio of radial to axial coordinates of point on body surface, $\tan^{-1} r/x$

ξ axial coordinate of line source

$f(\xi)$ source strength per unit of axial length

φ perturbation-velocity potential

ψ angle between normal to body surface and normal to ray, which intersects axis of body

GENERAL ANALYSIS

In the solution of the pressure distribution over a body, a method of successive approximation is used. A perturbation-velocity potential based on linearized flow is found from which the three velocity components may be determined. If these velocities satisfy the boundary conditions for the desired body, the potential describes the flow about the actual body. The pressure coefficient may then be found from

$$C_p = -2U_x/U \tag{1}$$

The perturbation-velocity potential may not be assumed completely arbitrarily, but is subject to several general limitations and to some particular ones imposed by the body. The particular limitations form a guide in the selection of the potential. The two general limitations are: (1) the potential must satisfy the Prandtl-Glauert equation; and (2) under the conditions of linearized flow, the disturbance velocities should disappear at the Mach cone.

The Prandtl-Glauert equation for compressible frictionless potential flow, in linearized form and cylindrical coordinates is

$$(M^2 - 1)\frac{\partial^2\varphi}{\partial x^2} - \frac{1}{r}\frac{\partial}{\partial r}\left(r\frac{\partial\varphi}{\partial r}\right) - \frac{1}{r^2}\frac{\partial^2\varphi}{\partial\theta^2} = 0 \tag{2}$$

A line source OT of strength per unit length $f(\xi)$, lying in the plane $\theta = [(\pi/2) + \delta]$, whose slope with respect to the flow direction is m, is shown in figure 1. The potential at some point P due to such a disturbance is

$$\varphi = \frac{1}{4\pi}\int_0^{x-R\beta} \frac{f(\xi)d\xi}{\sqrt{(\xi - x)^2 - \beta^2R^2}} \tag{3}$$

where R is, from the geometry of figure 1, defined by

$$R^2 = r^2 + (m\xi)^2 - 2m\xi r \sin(\theta - \delta) \tag{4}$$

This potential can readily be shown by direct substitution to satisfy equation (2).

Combining equations (3) and (4) and rearranging the terms result in

$$\varphi = \frac{1}{4\pi\sqrt{1 - m^2\beta^2}} \int_0^{x-R\beta} \frac{f(\xi)d\xi}{\sqrt{\left[\xi - \frac{x - mr\beta^2 \sin(\theta - \delta)}{1 - m^2\beta^2}\right]^2 - \left\{\left[\frac{x - mr\beta^2 \sin(\theta - \delta)}{1 - m^2\beta^2}\right]^2 - \frac{x^2 - r^2\beta^2}{1 - m^2\beta^2}\right\}}} \tag{5}$$

The limits of integration are the origin $\xi = 0$, because there is no disturbance ahead of it and no disturbances are propagated upstream; and $\xi = x - R\beta$, because no part of the line source beyond that point includes the point (x,r,θ) within its Mach cone.

Equation (5) is of the same form as equation (3), and can be readily integrated if $f(\xi)$ is assumed proportional to ξ : that is, $f(\xi) = (-4\pi K\sqrt{1 - m^2\beta^2})\xi$. Integration under this condition gives

$$\varphi = K\left\{\sqrt{\frac{x^2 - r^2\beta^2}{1 - m^2\beta^2}} - \left[\frac{x - mr\beta^2 \sin(\theta - \delta)}{1 - m^2\beta^2}\right] \cosh^{-1}\left[\frac{x - mr\beta^2 \sin(\theta - \delta)}{\sqrt{[x - mr\beta^2 \sin(\theta - \delta)]^2 - (x^2 - r^2\beta^2)(1-m^2\beta^2)}}\right]\right\} \tag{6}$$

The perturbation-velocity components U_r, U_x, and U_θ, respectively, can be found by differentiating equation (6) with respect to r, x, and θ:

$$U_r = K\beta^2 \left[\frac{m \sin(\theta - \delta)}{1 - m^2\beta^2} \cosh^{-1}\left\{ \frac{1 - \frac{mr\beta^2}{x} \sin(\theta - \delta)}{\sqrt{\left[1 - \frac{mr\beta^2}{x} \sin(\theta - \delta)\right]^2 - \left(1 - \frac{r^2\beta^2}{x^2}\right)\left(1 - m^2\beta^2\right)}} \right\} \right.$$

$$\left. - \frac{\left\{ \left[1 - \frac{mr\beta^2}{x} \sin(\theta - \delta)\right] m \sin(\theta - \delta) - \frac{r}{x}(1 - m^2\beta^2) \right\}}{\left\{ \left[1 - \frac{mr\beta^2}{x} \sin(\theta - \delta)\right]^2 - \left(1 - \frac{r^2\beta^2}{x^2}\right)(1 - m^2\beta^2) \right\}} \sqrt{\frac{1 - \frac{r^2\beta^2}{x^2}}{1 - m^2\beta^2}} \right] \tag{7}$$

$$U_x = -K \left[\frac{1}{1 - m^2\beta^2} \cosh^{-1}\left\{ \frac{1 - \frac{mr}{x}\beta^2 \sin(\theta - \delta)}{\sqrt{\left[1 - \frac{mr}{x}\beta^2 \sin(\theta - \delta)\right]^2 - \left(1 - \frac{r^2\beta^2}{x^2}\right)(1 - m^2\beta^2)}} \right\} \right.$$

$$\left. - \frac{m^2\beta^2 - \frac{mr}{x}\beta^2 \sin(\theta - \delta)}{\left\{ \left[1 - \frac{mr\beta^2}{x} \sin(\theta - \delta)\right]^2 - \left(1 - \frac{r^2\beta^2}{x^2}\right)(1 - m^2\beta^2) \right\}} \sqrt{\frac{1 - \frac{r^2\beta^2}{x^2}}{1 - m^2\beta^2}} \right] \tag{8}$$

$$U_\theta = Km\beta^2 \cos(\theta-\delta) \left[\frac{1}{1-m^2\beta^2} \cosh^{-1} \left\{ \frac{\left[1-\frac{ar\beta^2}{x}\sin(\theta-\delta)\right]}{\sqrt{\left[1-\frac{mr}{x}\beta^2\sin(\theta-\delta)\right]^2 - \left(1-\frac{r^2\beta^2}{x^2}\right)(1-m^2\beta^2)}} \right\} - \frac{\left[1-\frac{mr}{x}\beta^2\sin(\theta-\delta)\right]}{\left\{\left[1-\frac{mr}{x}\beta^2\sin(\theta-\delta)\right]^2 - \left(1-\frac{r^2\beta^2}{x^2}\right)(1-m^2\beta^2)\right\}} \sqrt{\frac{1-\frac{r^2\beta^2}{x^2}}{1-m^2\beta^2}} \right] \tag{9}$$

If $m = 0$, that is, if the line source is in the flow direction, these equations reduce to those developed by von Kármán and Moore for the flow about a right circular cone (see reference 1).

$$U_r = K\frac{x}{r}\sqrt{1-\frac{r^2\beta^2}{x^2}} \tag{7a}$$

$$U_x = -K \cosh^{-1}\frac{x}{r\beta} \tag{8a}$$

$$U_\theta = 0 \tag{9a}$$

The boundary condition for a particular flow requires that the velocity normal to the body at the surface be zero. In figure 2(a), O'F is normal to the x-axis and intersects it; O'G is normal to a ray OO' of the body and intersects the x-axis; O'H is normal to the body surface; O'L is normal to the contour of the body section found by cutting the body with a plane perpendicular to the x-axis and lies in that plane; and O'D is normal to plane OO'GFQ.

From figure 2(a),

$$U_n = 0 = \left[U_r \cos \nu - (U + U_x) \sin \nu\right] \cos \psi - U_\theta \sin \psi$$

or

$$U_r - U_\theta \frac{\tan \psi}{\cos \nu} = (U + U_x) \tan \nu \tag{10}$$

But, also from figure 2(a),

$$\tan \psi = \tan \lambda \cos \nu \tag{11}$$

and, with reference to figure 2(b),

$$\tan \lambda = \frac{dr}{r d\theta} \tag{12}$$

where $r = f(\theta)$ is the equation of the body cross section. If equations (10) to (12) are combined, the boundary condition for the flow is obtained:

$$U_r - \frac{1}{r} \frac{dr}{d\theta} U_\theta = (U + U_x) \frac{r}{x} \tag{13}$$

The second general condition for linearized conical flow, stated previously, is that the perturbation velocities approach zero as the Mach cone is approached, or as $r\beta/x$ approaches unity. This condition is exactly true for equations (7) to (9).

The potential found from the single-line source that has been considered until now is insufficient to calculate the flow about an arbitrary body. Because the potential due to one source satisfies the general limitations of the problem, however, a series of potentials due to a number of sources of various strengths and positions can be so added together that the resulting flow satisfies the boundary conditions for the particular body in question and thus can be assumed to be the desired flow.

Four parameters are considered in selecting the source pattern: the angular position δ, the slope of each source relative to the flow direction m, the number of sources, and the strength of each.

APPLICATION OF METHOD

Because the perturbation velocities are functions of only r/x and θ, the resulting body contours are conical and only one body

section that is in a plane normal to the free-stream-flow direction need be considered. The problem is thereby reduced to two dimensions and the body is completely described by one plane, as in figure 3. The line sources thus appear in such a figure simply as points.

With the use of several sources of varying strength and position, the boundary condition, defined by equation (13), can be made to yield the flow about the desired body shape. Although such a solution is found largely by trial and error, some general rules for the selection of sources yielding a specified body shape can be established. The four parameters previously mentioned, that is, the angular position δ, the slope of the line sources m, the number of sources, and the source strength, must be kept in mind.

1. The axes of symmetry of the body section should be noted, inasmuch as the sources must be symmetrically arranged relative to the same axes.

2. The source nearest to a peak in the section should be nearer to that point than to any other point on the section because the perturbation velocities due to the body are a maximum at the peak and, inasmuch as velocities due to the source increase as the distance from the source decreases, the point closest to the source has the highest velocity. The distance from a point on the body to the nearest source must therefore be equal to or less than the radius of curvature of the body section at that point.

3. If the body is elongated, a series of sources in a line are required. The slenderer the section, the more sources are needed to prevent contour irregularities in the body described by the resulting solution (equation (13)). Also, for a given body of this type, as the section narrows the sources should be closer together.

4. In general, the larger the number of sources used, the more closely the linearized flow obtained fits the body in question and the fewer are the number of trial solutions required to obtain a satisfactory answer. Each such solution, however, is more laborious than one using fewer sources.

To summarize, the angular position of the sources is determined by rules 1 and 2, the distance from the axis by 1, 2, and 3, and the number of sources by 1 and 3. Rule 4 serves as an over-all guide. Only K, which is proportional to the source strengths, remains to be determined. From the symmetry condition, sources that are in the same position relative to the axes of symmetry have the same strength.

With a known number of different source strengths, equation (13) may be solved for the strengths at the same number of points on the surface by using equations (7) to (9). The potential is now completely defined. This potential should then be checked in equation (13) at several points on the body to determine whether the flow due to the source potential is the same as that over the actual body. It should be noted that the strength of a source may be negative.

The case of flow at angle of attack can be solved by considering, at zero angle, a body whose cross section consists of sections of the actual body taken normal to the free stream instead of normal to the axis. The x-axis of the new body is then parallel to the flow direction. For a small angle of attack, the two cross sections probably differ little, but their positions relative to the coordinate axes differ. The case of yawed flight at angle of attack can be solved in a similar manner (fig. 4).

Examples

Several examples follow to illustrate the general rules that have been outlined:

Example I. - Assume that an elliptic section (fig. 3) is desired. From the symmetry condition, two sources are assumed as a first approximation to such a section. These sources are of equal strength, equidistant from the x-axis, and at $\delta = 0$ and $\delta = \pi$. The velocities are found from equations (7) to (9).

The equation of an ellipse is

$$r^2 = \frac{d^2c^2}{d^2 \sin^2 \theta + c^2 \cos^2 \theta}$$

where c and d are major and minor semi-axes, respectively.

From this relation, $\frac{1}{r}\frac{dr}{d\theta}$ may be obtained:

$$\frac{1}{r}\frac{dr}{d\theta} = \frac{\sin \theta \cos \theta \cdot (c^2-d^2)}{d^2 \sin^2 \theta + c^2 \cos^2 \theta} \tag{14}$$

When a Mach number and values for c and d, are given, a position for the sources (that is, a value of m) is selected. From the second general rule, $c - m$ of figure 3 should be somewhat less than

the radius of curvature at c, $\pi/2$. With this guide, a value of m can be assumed. From the coordinates of one point on the surface K/U can be found by substitution of equations (7) to (9) and (14) in equation (13). Several other points should then be checked in the boundary relation. If agreement is poor, the sources should be moved and perhaps others added. When a potential is obtained that satisfies equation (13) closely enough, the pressure coefficient can then be found from equation (1).

An example of the results of such a calculation is shown in figure 3. The body shape obtained by using the value of K previously determined and by solving equation (13) for r/x as a function of θ is shown together with the desired shape. In this example, where the contour is almost circular, the pressure distribution approximately follows the body shape. The deviation of the calculated section from the desired ellipse could be considerably decreased by placing the two sources farther apart and adding a third source at the origin.

If the flow about an ellipse having a larger ratio of major to minor axes than was used in figure 3 is desired, the perturbation-velocity potential for two sources gives poor results. The effect of varying K while holding m constant is shown in figure 5. A similar result is obtained by holding the length of one of the axes constant and varying the length of the other by changing m, while holding the source strength constant. In order to obtain a satisfactory solution for an ellipse having the ratio of the axes much greater than that in figure 3, a series of sources can be used.

Example II. - Assume that an ellipse having the ratio of major to minor axes equal to 3 is desired. (See fig. 6.) Obviously, for symmetry, a number of source pairs, as used in the previous example, plus perhaps a single source at the origin, will give the desired solution. The position of source 1 in figure 6 may be assumed from the condition that its distance from the peak must be approximately the radius of curvature at the peak. The distance between sources 1 and 2 is taken as about equal to the distance from source 2 to the nearest point on the body. The remaining sources may be similarly chosen. This procedure gives a system of three source pairs whose velocities are found from equations (7) to (9), and a single source whose velocities are found from equations (7a) and (8a), which are simply the velocities found when m is zero. When equation (13) is solved for this system of sources at four points on the body, K_1, K_2, K_3, and K_4 (fig. 6) are determined and the pressure coefficient can be found from equation (1).

The desired ellipse and the contour calculated by the use of seven sources are shown in figure 6 together with the pressure distribution

corresponding to the source configuration. In this example the section deviates greatly from a circle and the pressure distribution no longer follows the body contour. The maximum and minimum values of the pressure coefficient, however, still occur at the maximum and minimum points, respectively, on the section.

Example III. - Now assume that the pressure distribution is desired over a body whose cross section is a triangle modified by rounding the vertices (fig. 7). From symmetry considerations, three sources of equal strength should be assumed at $\delta = 0$, $2\pi/3$, and $4\pi/3$. These sources should be placed at approximately the center of curvature of the vertices. Because the body is approximately circular, a source that is not of the same strength as the others should be placed at the origin.

The velocity components can then be calculated from equations (7) to (9) and the strength of the sources can be established by solving equation (13) at two points.

Such a surface, with the corresponding pressure distribution, is illustrated in figure 7. As in the first example, the pressure distribution follows the trends of the body shape.

It must be remembered that the examples given are meant to illustrate the method of solution of such bodies rather than to show actual pressure distributions, although the trends indicated should be correct. The bodies chosen are probably not slender enough for great accuracy in a linearized solution.

SUMMARY OF ANALYSIS

An approximate method has been presented for calculating the pressure distribution on conical bodies of arbitrary cross section in supersonic flow. By a combination of elementary conical flows due to line sources, the flow about a slender arbitrary cone can be described. Four parameters are considered in determining such a system of sources: the spacing of the sources around an axis lying in the flow direction, the slope relative to the flow, the number of sources, and their strength. The first three parameters can be determined by several conditions. First, the same symmetries will hold for the sources as for the body. Second, the distance from a peak to a source will be less than or equal to the radius of curvature at that point. Third, for an elongated body, the slenderer the section, the closer together the sources must be. Finally, the greater the number of sources used, the more accurately the desired body can be approximated. The solution will be more laborious, however, if more sources are used. The fourth parameter, source strength, may be found by direct calculation.

The case of a conical body at angle of attack and of yawed flight can be solved by the same method.

Flight Propulsion Research Laboratory,
National Advisory Committee for Aeronautics,
Cleveland, Ohio, April 27, 1948.

465

REFERENCES

1. von Kármán, Theodor, and Moore, Norton B.: Resistance of Slender Bodies Moving with Supersonic Velocities with Special Reference to Projectiles. Trans. A.S.M.E., vol. 54, no. 23, Dec. 15, 1932, pp. 303-310.

2. Tsien, Hsue-Shen: Supersonic Flow over an Inclined Body of Revolution. Jour. Aero. Sci., vol. 5, no. 12, Oct. 1938, pp. 480-483.

3. Ferrari, C.: Campi di Corrente Ipersonora Attorno a Solidi de Rivoluzione. L'Aerotecnica, tomo 19, nr. 1, Giugno 1937, p. 507-518.

4. Brown, Clinton E., and Parker, Hermon M.: A Method for the Calculation of External Lift, Moment, and Pressure Drag of Slender Open-Nose Bodies of Revolution at Supersonic Speeds. NACA ACR No. L5L29, 1946.

965

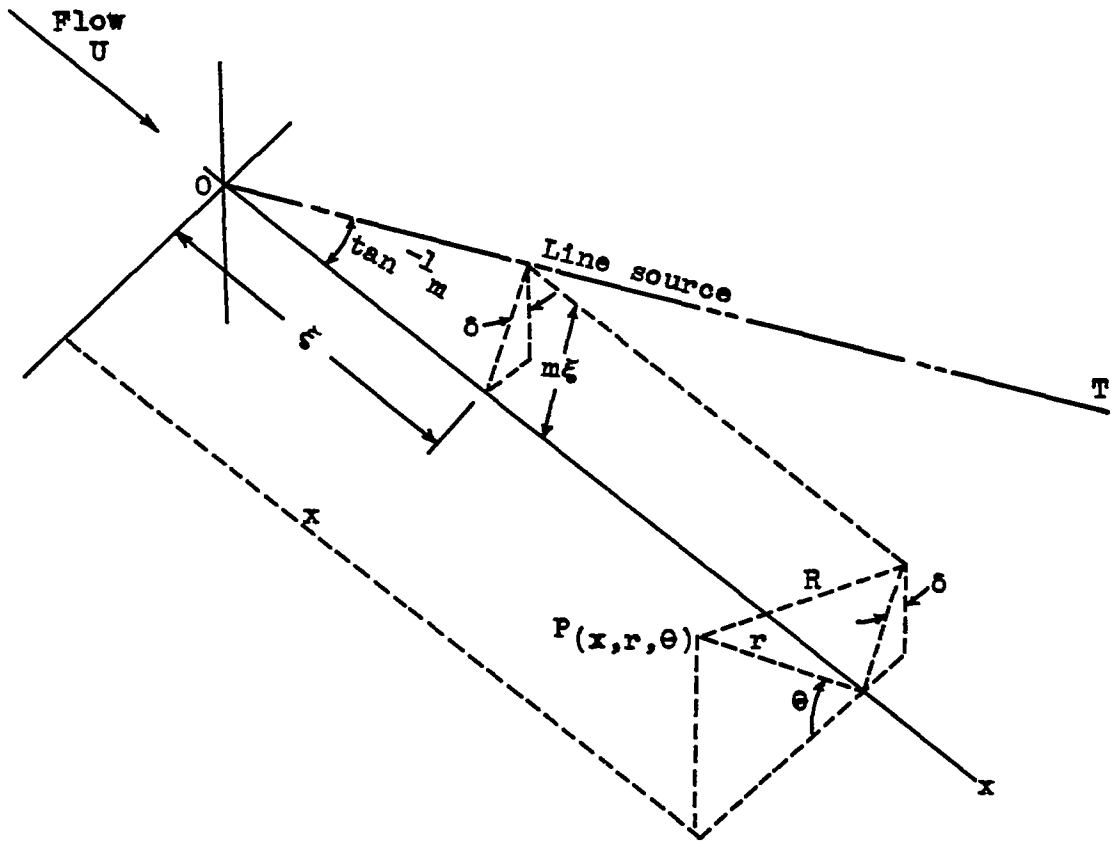

Figure 1. - Geometric relations defining one arbitrary line source and its relation to a point P in flow field.

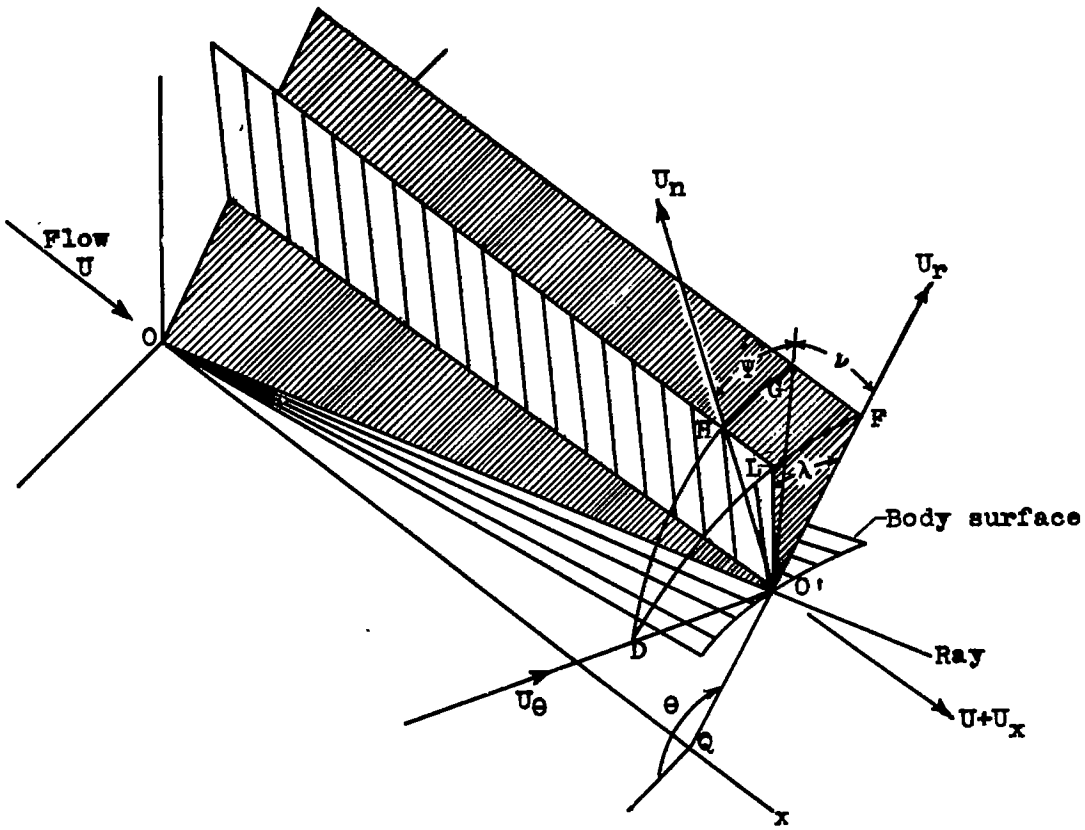

(a) Projection sketch of body surface and velocity components.

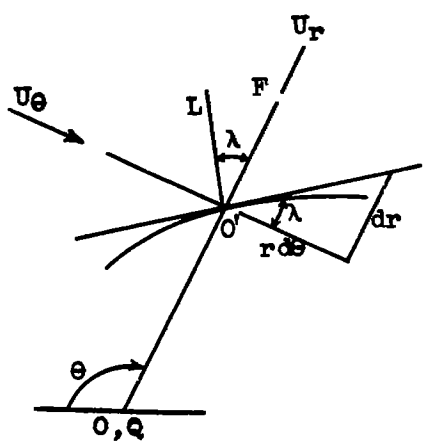

(b) Section normal to x-axis taken through point O'.

Figure 2. - Geometric relations between body surface and velocity components.

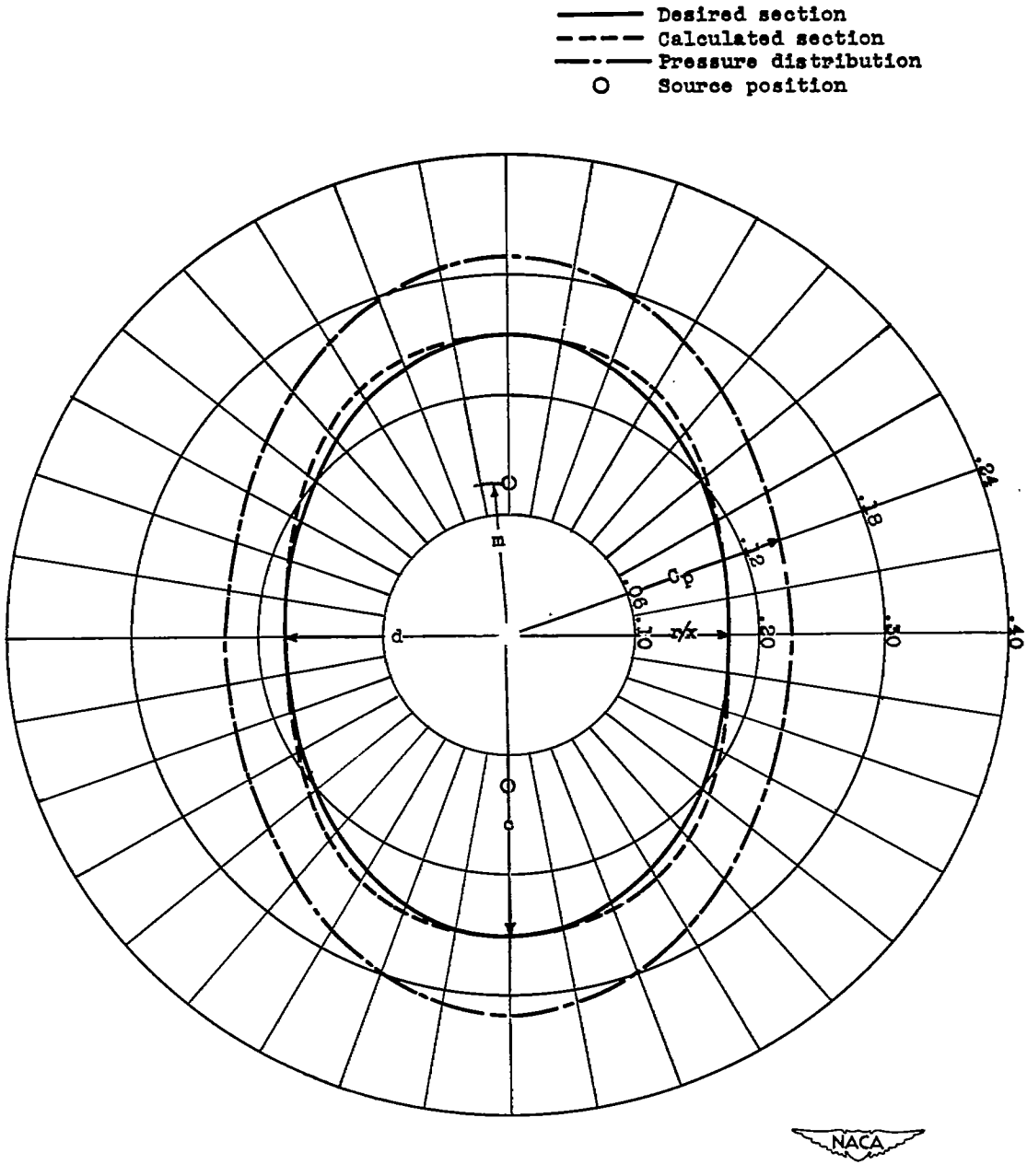

Figure 3. - Comparison of desired elliptical body with calculated body and resulting pressure distribution. $\beta = 1.5$; $m = 0.125$; $K/U = 0.0220$.

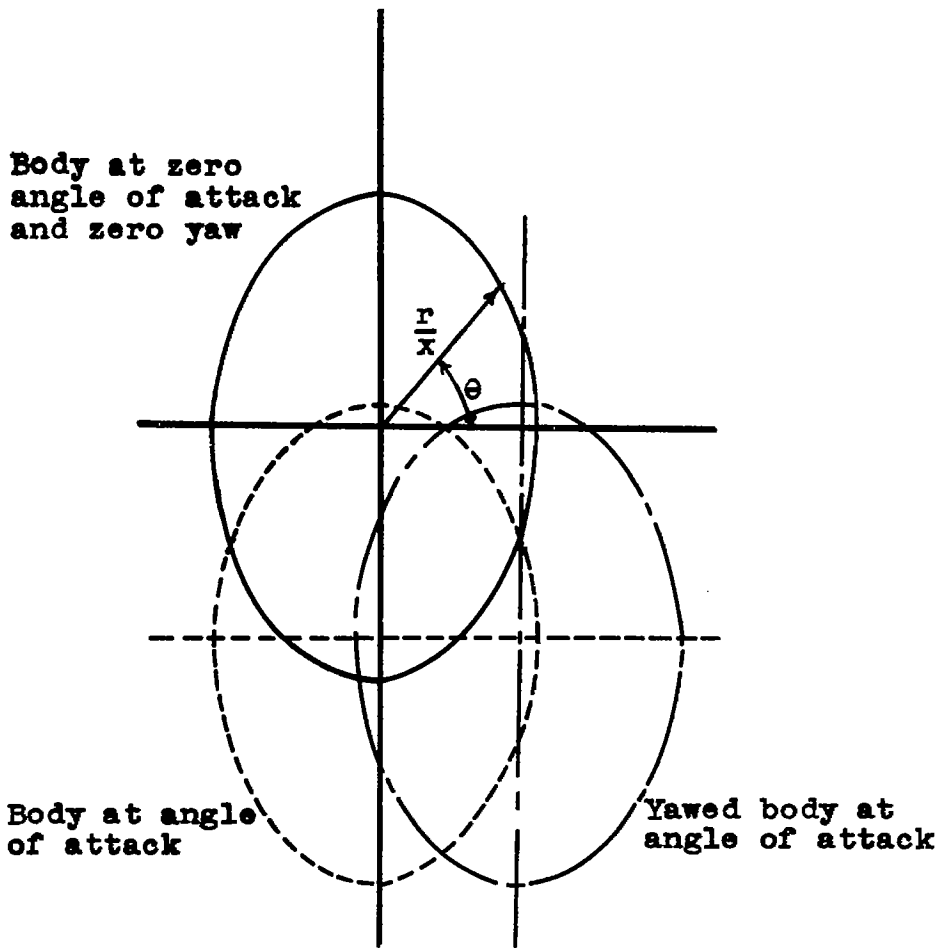

Figure 4.- Comparison of body at zero angle of attack and zero yaw with same body at angle of attack and in yawed flight.

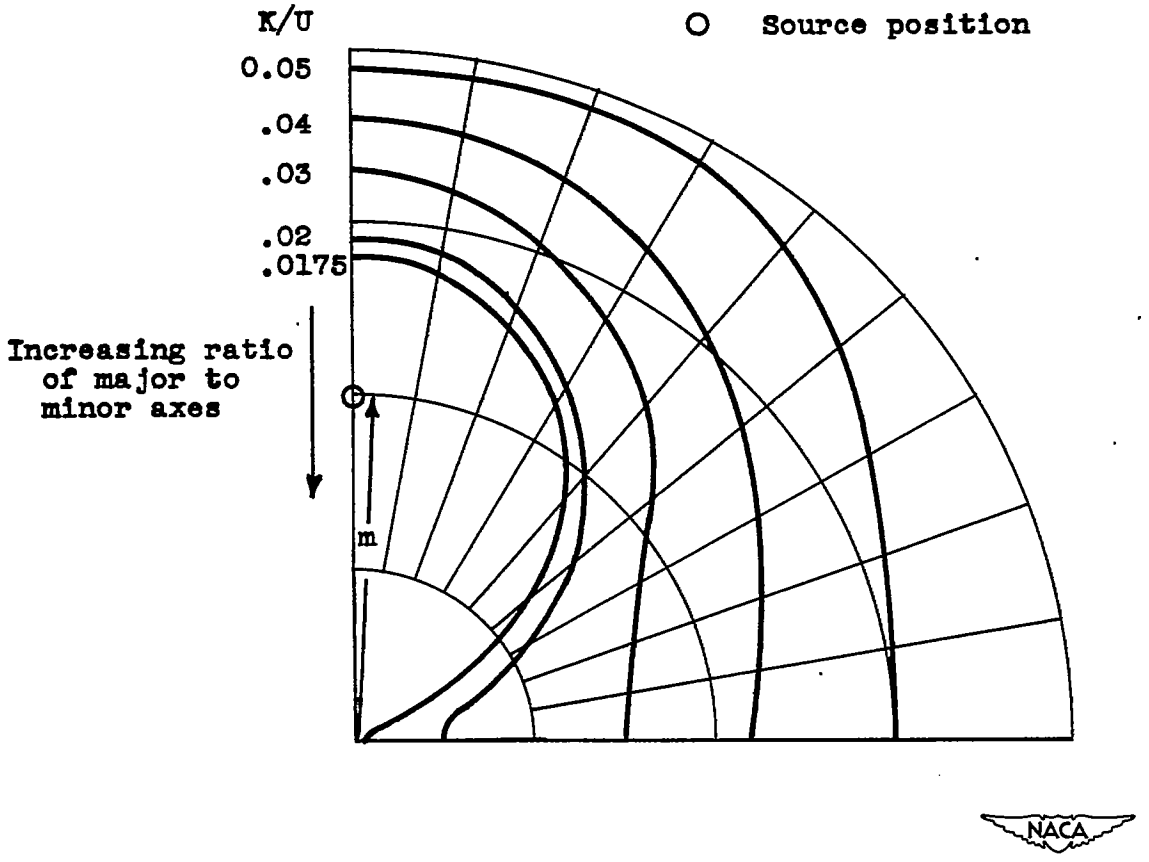

Figure 5. - Surfaces obtained with sources of varying strength at (a, ± π/2). m = 0.20.

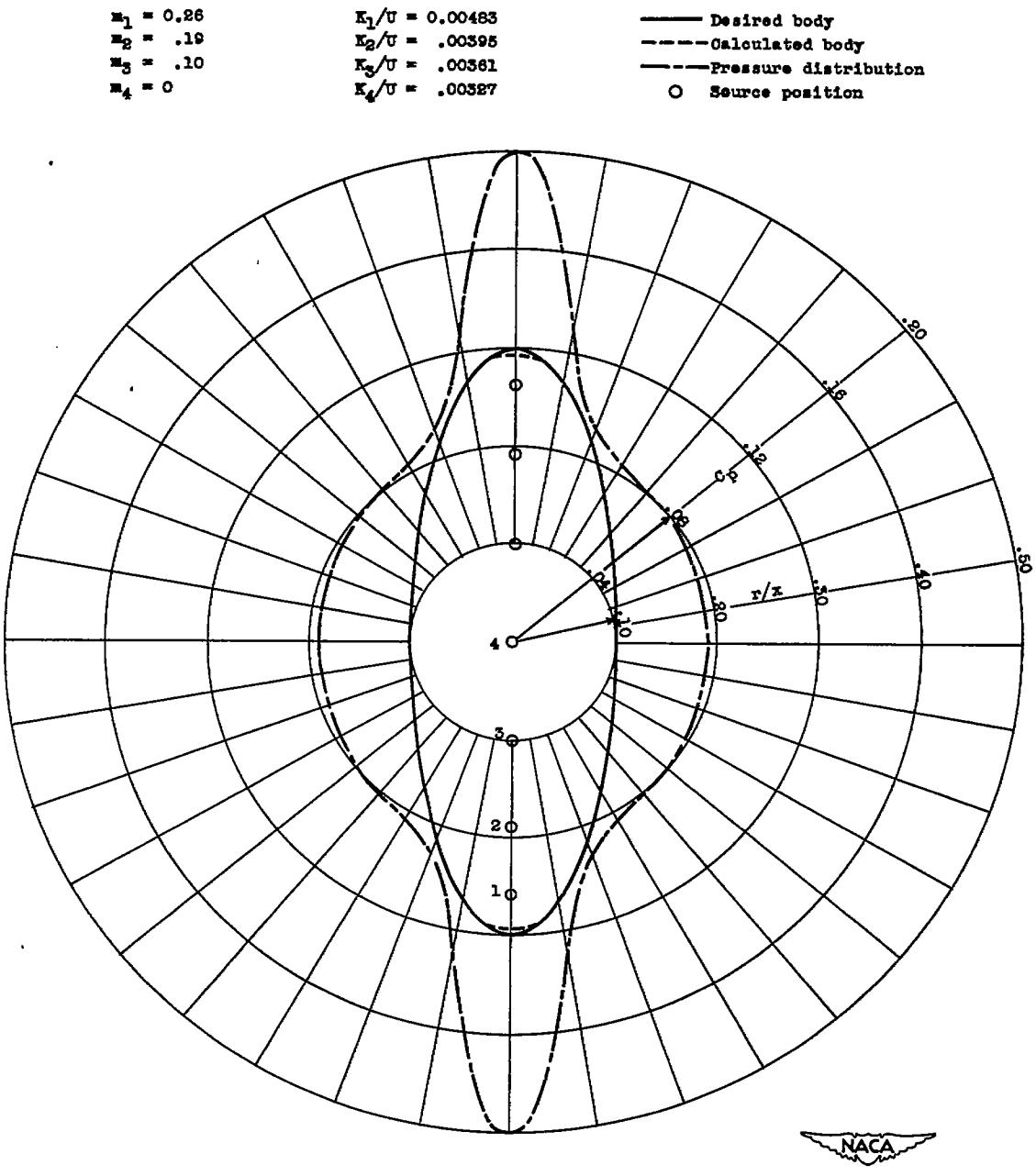

Figure 6. - Comparison of desired slender elliptical body with calculated body and resulting pressure distribution. $\beta = 1.5$.

965

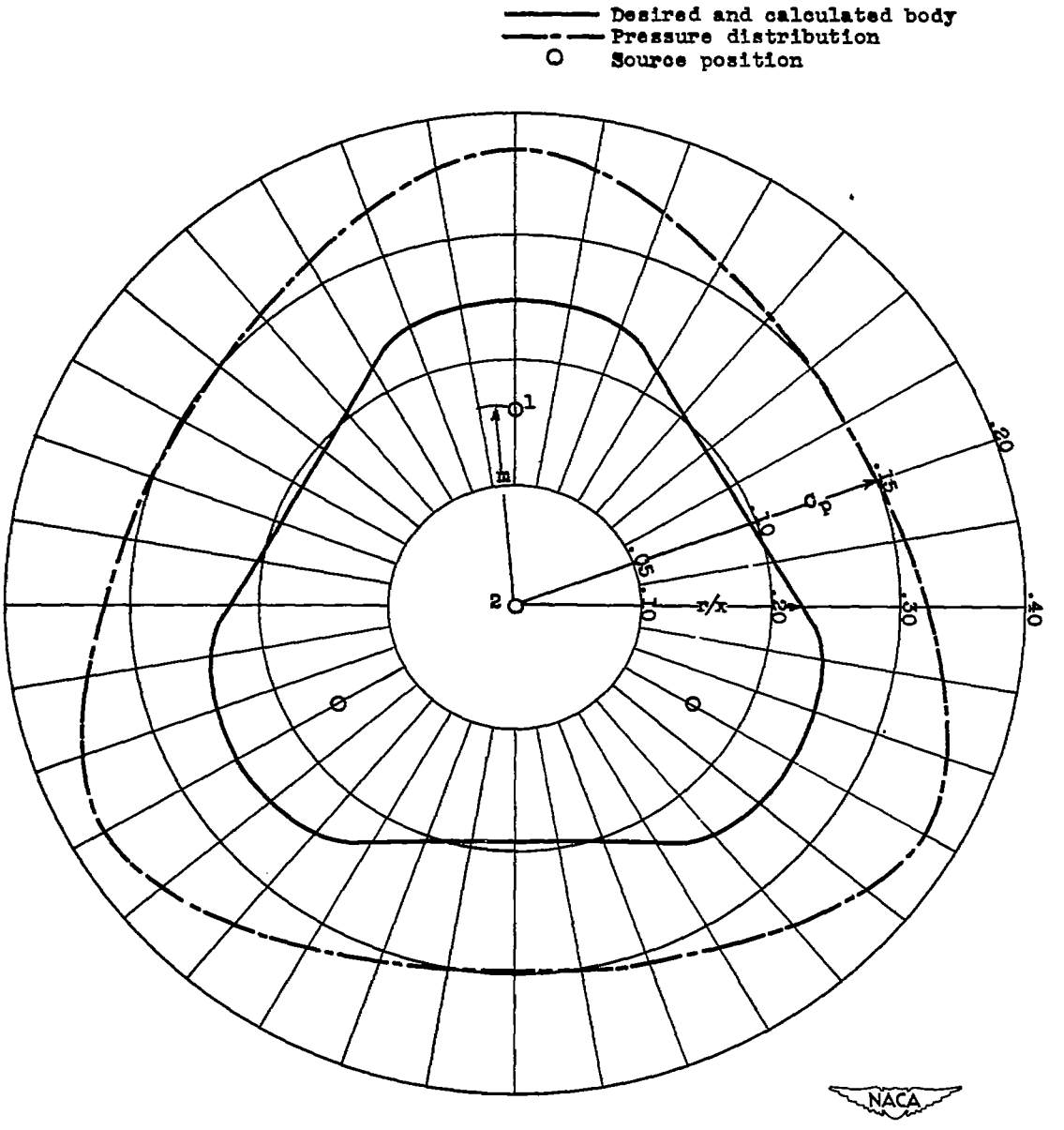

Figure 7. - Comparison of desired modified triangular body with calculated body and resulting pressure distribution. $\beta = 1.5$; $m = 0.16$; $K_1/U = 0.0102$; $K_2/U = 0.0154$.