NACA TN No. 1717

TECH LIBRARY KAFB, NM
0144917

NATIONAL ADVISORY COMMITTEE FOR AERONAUTICS

TECHNICAL NOTE

No. 1717

GUST-TUNNEL INVESTIGATION OF A 45° SWEPTFORWARD-WING MODEL

By Harold B. Pierce

Langley Aeronautical Laboratory
Langley Field, Va.

Washington
October 1948

TECH LIBRARY KAFB, NM

0144917

NATIONAL ADVISORY COMMITTEE FOR AERONAUTICS

TECHNICAL NOTE NO. 1717

GUST-TUNNEL INVESTIGATION OF A 45° SWEPTFORWARD-WING MODEL

By Harold B. Pierce

SUMMARY

The results of tests made in the Langley gust tunnel on a 45° sweptforward-wing model show that the acceleration increment obtained in a gust can be satisfactorily predicted from a slope of the lift curve obtained by multiplying the slope of the lift curve of the equivalent straight wing by the cosine of the angle of sweep and by using strip theory to estimate the penetration effect.

INTRODUCTION

Since many of the aerodynamic characteristics of swept wings appear to be about the same for equal amounts of sweepback or sweepforward, the method of prediction of gust loads for airplanes with sweptback wings as presented in reference 1 was believed to be equally applicable to airplanes having sweptforward wings. Accordingly, tests were made in the Langley gust tunnel on a model with wings swept forward 45°. A comparison of the tests results is made with the results of calculations made by the method of reference 1. The problems considered are the selection of a slope of the wing-lift curve and the determination of the effect of the gradual penetration of a swept wing into a gust.

APPARATUS AND TESTS

A photograph of the skeleton model used in the tests is shown as figure 1 and a line plan-view drawing is shown in figure 2. The characteristics of the model and the test conditions are listed in the following table:

Weight, W, pounds	12.00
Wing area, S, square feet	6.00
Wing loading, W/S, pounds per square foot	2.00
Span, b, feet	4.24
Aspect ratio, b^2/S	3.00
Chord lengths measured parallel to plane of symmetry:	
Mean geometric chord, feet	1.425
Root chord, c_s, feet	1.90
Tip chord, c_t, feet	0.95
Taper ratio, c_t/c_s	0.5
Sweep angle of half-chord line, degrees	-45
Slope of the lift curve determined by force tests, per radian	2.66
Slope of the lift curve determined by multiplying lift-curve slope of equivalent straight wing by cosine of sweep angle, per radian	3.12
Center-of-gravity position, percent mean geometric chord	39.0
Gust velocity, U, feet per second	10
Forward velocity, V, miles per hour	60

The slope of the force-test lift curve included in the table was obtained from tests made in the Langley free-flight tunnel on the model with the tail off. The center-of-gravity position was calculated to give the same static stability as that of the models of reference 1.

The wing of the model was derived from that of the straight-wing model of reference 1 by rotating the straight wing about the half-chord point at the plane of symmetry so that the constant-length half-chord line moved forward through an angle of 45°. In order to provide space for batteries and the accelerometer in the wing of the model, the center section has smooth bulges projecting from the top and bottom surfaces. The thickness at the center section is therefore about double the thickness that the wing would have without the bulges.

The gust tunnel and its equipment are described in references 1 and 2. The gust profile used in the tests is shown in figure 3 as the ratio of local gust velocity to average maximum gust velocity as a function of the penetration in mean wing chords of the model.

Tests of the sweptforward-wing model consisted of 10 flights of the model at a forward velocity of 60 miles an hour through a sharp-edge gust of 10 feet per second. Measurements of the forward speed, gust velocity, normal-acceleration increment, and pitch-angle increment were made during each flight.

PRECISION

The measured quantities are estimated to be accurate within the following limits for any test or run:

Acceleration increment, Δn, g units	± 0.05
Forward velocity, V, feet per second	± 0.5
Gust velocity, U, feet per second	± 0.1
Pitch-angle increment, $\Delta\theta$, degrees	± 0.1

In any given flight, minor variations in the launching speed or attitude of the model introduce extraneous pitching motions which cause errors in the acceleration increment. It is not possible at present to eliminate such errors by means of corrections to the data. Consideration of all factors indicates that the results from repeat flights should have a dispersion of not more than $\pm 0.05g$ for a sharp-edge gust. Similar considerations indicate that the dispersion should not exceed $\pm 0.1g$ when the responses to the sharp-edge gust are built up to represent the responses to a gust with a gradient distance of 9 chords.

RESULTS

Records for all flights were evaluated to obtain histories of the normal-acceleration increment and pitch-angle increment during traverse of the gust. Representative histories of results for tests in the sharp-edge gust are shown in figure 4(a). The acceleration increment Δn and pitch-angle increment $\Delta\theta$ are plotted against the distance of the airplane center of gravity in mean chords from the leading edge of the gust-tunnel test section.

Histories of events for a gust for which the velocity increased linearly from zero to a maximum value in a horizontal or gradient distance of 9 chords were obtained by building up by superposition the histories obtained in the sharp-edge gust under the assumption that the sharp-edge gust could be considered to be a "unit jump" type gust (reference 3). The gradient distance of 9 chords was the maximum that could be obtained, since the method is limited by the extent of the original histories. The gradient distance of 9 chords is, however, in the range of gradient distances considered important for the design of an airplane. Sample histories of the responses to a gust with a gradient distance of 9 chords are shown in figure 4(b).

The maximum acceleration increments were determined from each time history of acceleration increment. Since the values of forward speed and gust velocity varied slightly between flights, each maximum acceleration increment was corrected to a forward speed of 60 miles an hour and

to a gust velocity of 10 feet per second on the assumption that the acceleration increment is directly proportional to forward speed and gust velocity. The averages of the corrected maximum acceleration increments for each gust shape are presented in table I.

CALCULATIONS

Calculations to predict the response of the sweptforward-wing model to the test gust were made according to the method set forth in reference 1. As in reference 1, the unsteady-lift function C_{L_g} for penetration of a sharp-edge gust and the function C_{L_α} for a sudden change of angle of attack are in the form of ratios of the lift coefficient at any distance to the lift coefficient after an infinite distance has been traversed. The functions were obtained from the curves of reference 4 for infinite aspect ratio and the C_{L_g} function was modified by strip theory to take into account the gradual penetration of the swept-forward wing into the gust. The C_{L_α} curve and the modified C_{L_g} curve are shown in figure 5 in terms of chord lengths of the test model. For purposes of comparison the unmodified C_{L_g} curve is also shown in figure 5. Two slopes of the lift curve were used; one was that of the straight-wing model of reference 1 multiplied by the cosine of the angle of sweep and the second was the slope determined from force tests made under steady-flow conditions. The maximum acceleration increments determined by use of each of these lift-curve slopes are included in table I.

DISCUSSION

As in the case of the gust-tunnel tests of the 45° sweptback-wing model reported in reference 1, examination of the results presented in figure 4 shows that appreciable pitching motion is present at the time of maximum acceleration increment for both the sharp-edge gust and the 9-chord-gradient-distance gust. Since the calculations to predict the response of the sweptforward-wing model to these gusts were made on the assumption of no pitching motion, the test results were corrected by the approximate method used in reference 1. The experimental results reduced to zero pitch are included in table I.

The experimental results reduced to zero pitch are compared with the calculated results in table I, and the results calculated from the slope of the lift curve derived by the cosine law are found to be in excellent agreement with experiment. The method of reference 1 is thus indicated to be equally applicable for the prediction of gust loads on sweptforward or sweptback wings. Similarly, calculations in which the steady-flow

slope of the lift curve is used give results lower than experiment. The same conclusions, therefore, can be drawn for the sweptforward wing as were drawn for the sweptback wing in reference 1; namely, the maximum acceleration increment experienced in a gust by a sweptforward-wing airplane depends on (1) the slope of the lift curve of the equivalent straight wing multiplied by the cosine of the angle of sweep rather than on the steady-flow slope of the lift curve and (2) the effect of the gradual penetration of the gust on the unsteady-lift function. It might be noted that for the 45° swept wings tested the more elaborate expression in reference 5 for the determination of the slope of the lift curve of swept wings based on panel aspect ratio yields the same slope of the lift curve as the cosine law. It is not known at present, however, whether the simplified-cosine-law method of determining the slope of the lift curve will be applicable for the prediction of gust loads on wings having a panel aspect ratio that differs from those tested.

The data of table I indicate that the pitching motion increases the acceleration increment about 10 percent in the sharp-edge gust and about 14 percent in the gust with a gradient distance of 9 chords. Since an increase of about 10 percent was found for each gust shape for the sweptback-wing model of reference 1, the effect of pitching motion on the acceleration increment appears to be about the same for equal amounts of sweepback or sweepforward.

The results of the present investigation were compared with those for the sweptback-wing model of reference 1 by adjusting the results to represent the same test conditions. The comparison showed that the gust load on the sweptforward wing was about 9 percent greater for each gust shape than on the sweptback wing. This difference was predicted by analysis and it appears that the principal reason is that the penetration effect for the sweptforward wing used is less than that for the sweptback wing because of the wing taper, since the leading-edge sweep of the sweptforward wing is less than that of the sweptback wing.

CONCLUDING REMARKS

Excellent agreement was obtained between experimental data and calculated results for the response of the 45° sweptforward-wing model to gusts. Since similar results had previously been obtained for sweptback wings, indications are that the maximum acceleration increment experienced in a gust by a swept-wing airplane depends on (1) the slope of the lift curve of the equivalent straight wing

multiplied by the cosine of the angle of sweep rather than on the steady-flow slope of the lift curve and (2) the effect of the gradual penetration of the gust on the unsteady-lift function.

Langley Aeronautical Laboratory
National Advisory Committee for Aeronautics
Langley Field, Va., July 23, 1948

REFERENCES

1. Pierce, Harold B.: Tests of a 45° Sweptback-Wing Model in the Langley Gust Tunnel. NACA TN No. 1528, 1948.

2. Donely, Philip: An Experimental Investigation of the Normal Acceleration of an Airplane Model in a Gust. NACA TN No. 706, 1939.

3. Jones, Robert T.: Calculation of the Motion of an Airplane under the Influence of Irregular Disturbances. Jour. Aero. Sci., vol. 3, no. 12, Oct. 1936, pp. 419-425.

4. Jones, Robert T.: The Unsteady Lift of a Wing of Finite Aspect Ratio. NACA Rep. No. 681, 1940.

5. Letko, William, and Goodman, Alex: Preliminary Wind-Tunnel Investigation at Low Speed of Stability and Control Characteristics of Swept-Back Wings. NACA TN No. 1046, 1946.

TABLE I

COMPARISON OF EXPERIMENTAL AND CALCULATED

MAXIMUM ACCELERATION INCREMENTS

Gradient distance (chords)	Experimental Δn_{max} (g units)	Experimental Δn_{max} reduced to zero pitch (g units)	Calculated Δn_{max} (reference 1) (g units)	
			Cosine-law slope	Steady-flow slope
0	1.18	1.07	1.09	0.93
9	1.03	.89	.91	.78

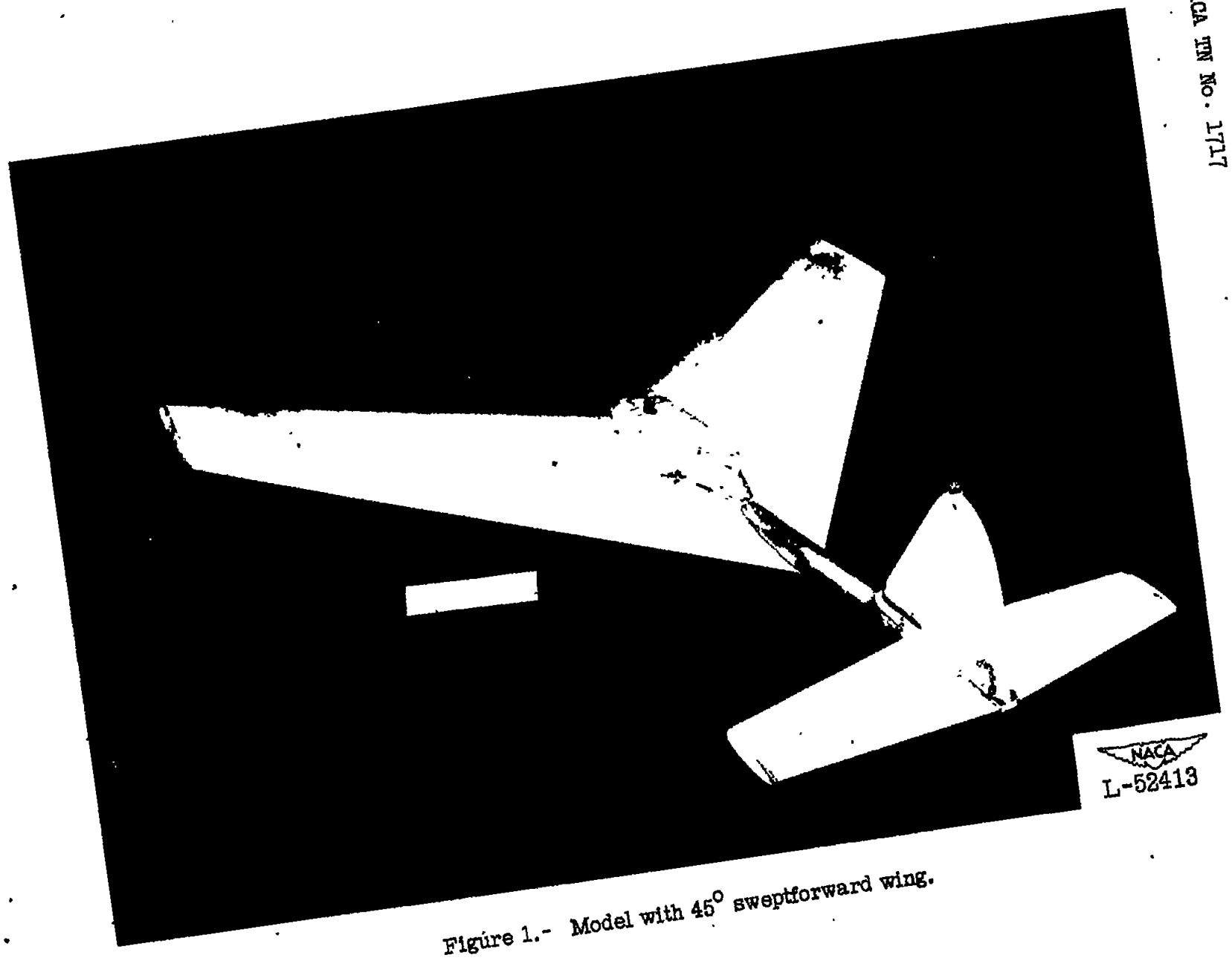

Figure 1.- Model with 45° sweptforward wing.

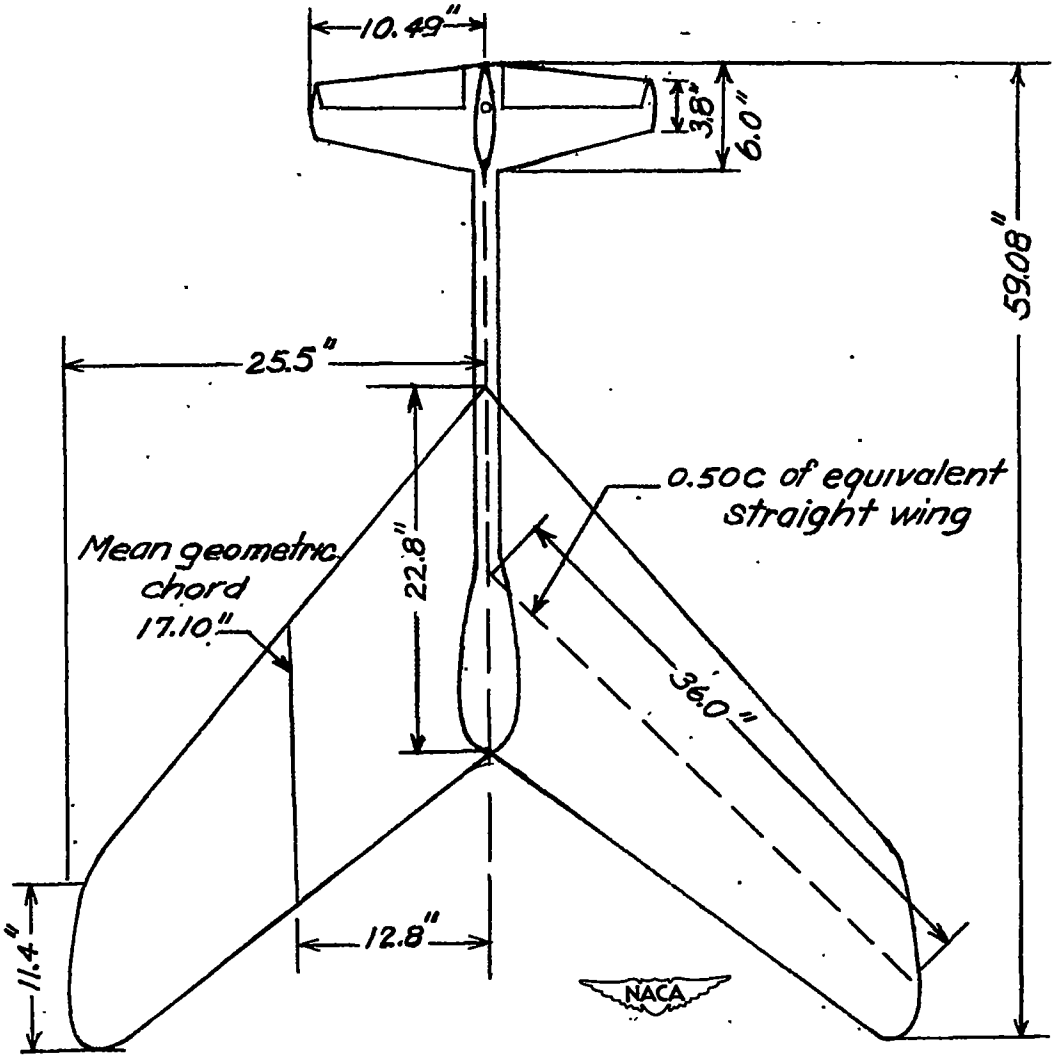

Figure 2.- Plan form of 45° sweptforward-wing model.

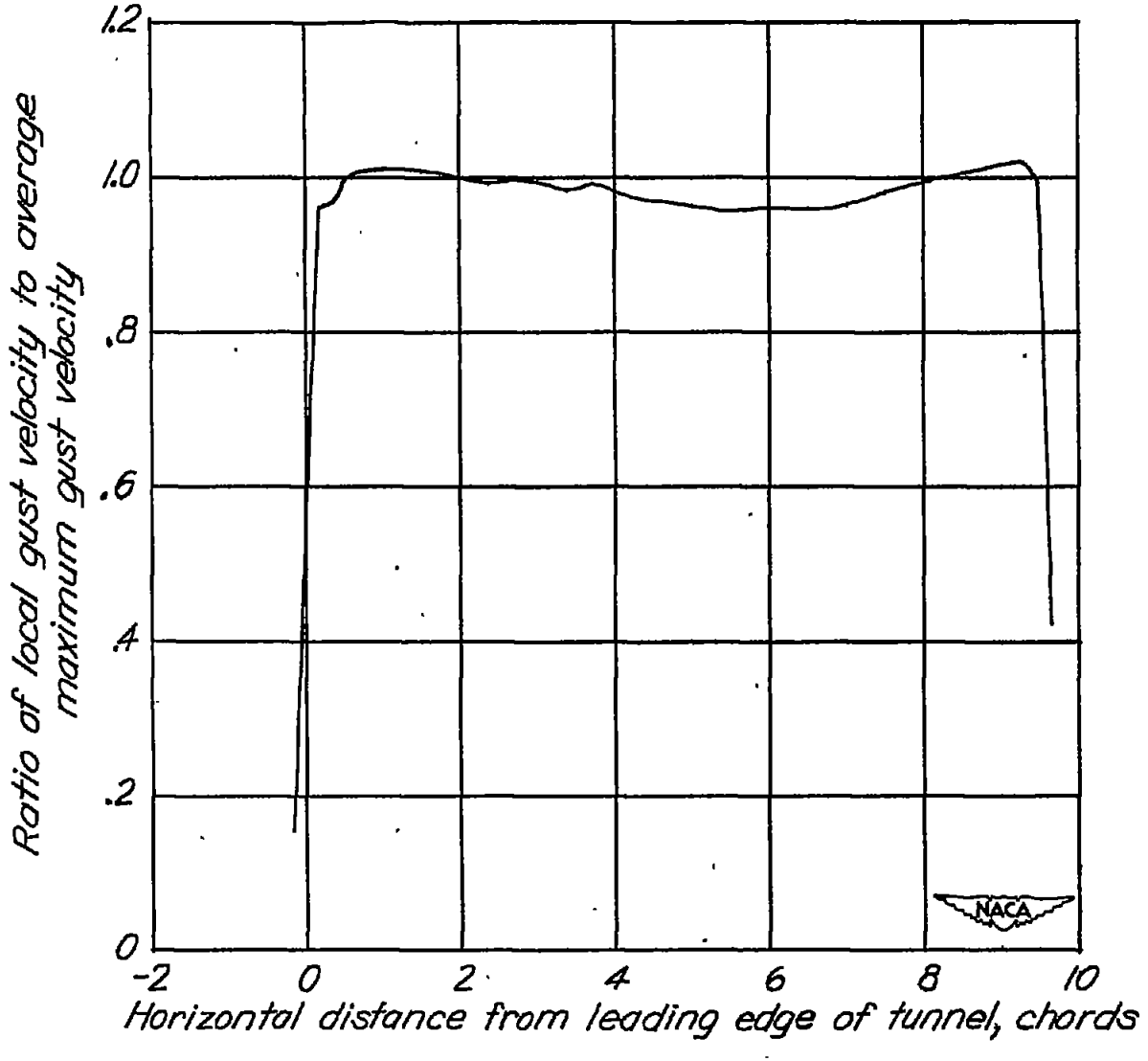

Figure 3.- Velocity distribution through jet.

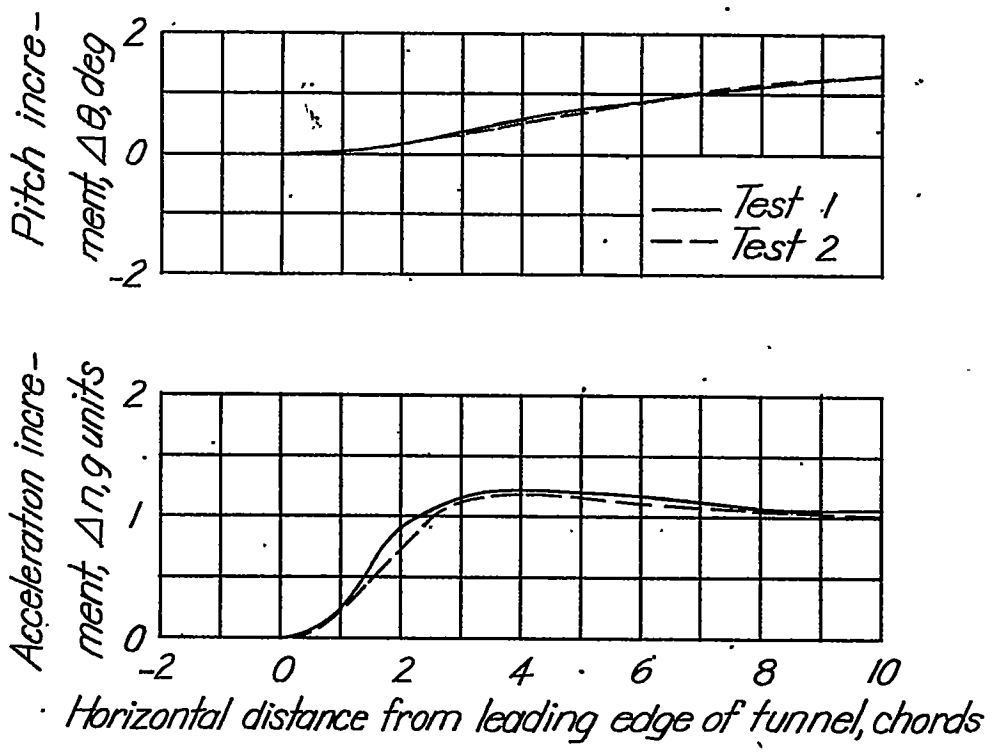

(a) Sharp-edge gust.

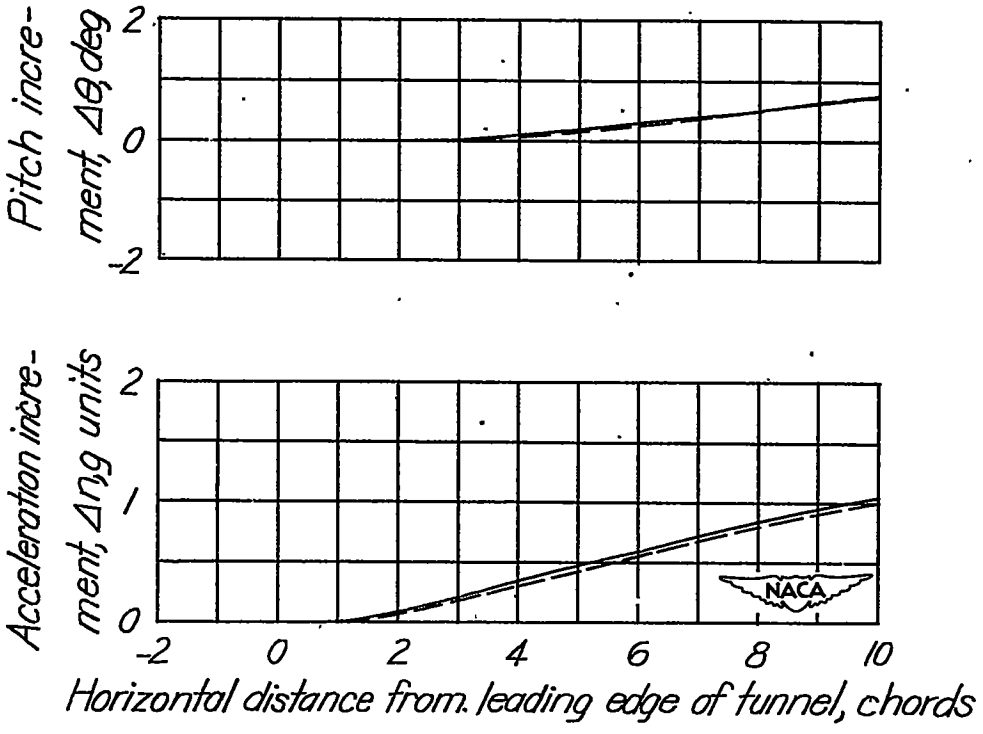

(b) Gust with 9-chord gradient distance. (Computed from experimental data for sharp-edge gust.)

Figure 4.- Representative histories of events in test gusts.

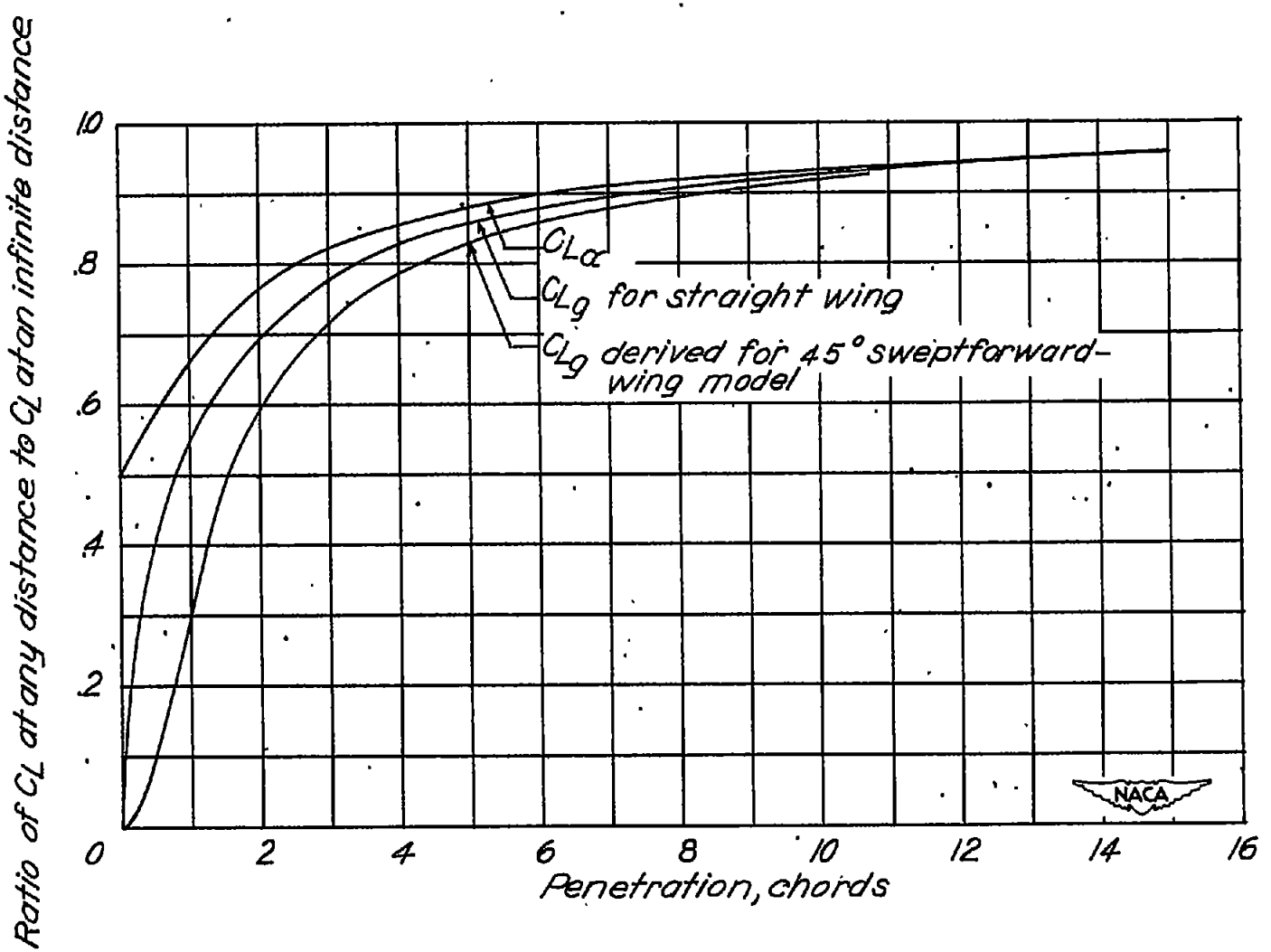

Figure 5.- Curves of C_{L_g} and C_{L_α} for infinite aspect ratio based on Jones' unsteady-lift functions (reference 4).