NACA TN No. 1730

8178

TECH LIBRARY KAFB, NM
0144912

NATIONAL ADVISORY COMMITTEE FOR AERONAUTICS

TECHNICAL NOTE

No. 1730

EFFECTS OF TEMPORAL TANGENTIAL BEARING ACCELERATION ON PERFORMANCE CHARACTERISTICS OF SLIDER AND JOURNAL BEARINGS

By Dezso J. Ladanyi

Lewis Flight Propulsion Laboratory
Cleveland, Ohio

Washington
October 1948

TECH LIBRARY KAFB, NM
0144912

NATIONAL ADVISORY COMMITTEE FOR AERONAUTICS

TECHNICAL NOTE NO. 1730

EFFECTS OF TEMPORAL TANGENTIAL BEARING ACCELERATION ON PERFORMANCE CHARACTERISTICS OF SLIDER AND JOURNAL BEARINGS

By Dezso J. Ladanyi

SUMMARY

A theoretical analysis of the effects of temporal tangential bearing acceleration on several performance characteristics of slider and journal bearings is presented. The derivations of the mathematical expressions for these effects begin with the laws of classical hydrodynamics and conclude with modified versions of the usual performance equations in lubrication. Equations are presented that establish fundamental relations and show the effects of this type of acceleration on pressure distribution and load capacity. Some examples employing the results are presented along with suggestions for other possible applications. Nomographs are included to facilitate solution of practical problems.

The equations show that the factor which is most important in establishing the effect of acceleration on bearing performance characteristics is the ratio of acceleration to speed. When this ratio is high, the effect of acceleration is large; when it is low, the effect is small. It was found that acceleration acts to decrease load capacity of a bearing. In certain cases, the effects of acceleration are as important as those due to lubricant viscosity.

INTRODUCTION

The present conventional hydrodynamic theory of lubrication is based on a number of fundamental equations originally derived from the laws of internal friction and motion of fluids. Perhaps the most important expression on the subject is the basic differential equation for pressure distribution put forth by Reynolds (reference 1). Several terms, such as those referring to the compressibility of the fluid, eddy forces, variable viscosities, forces from weight and inertia, and certain velocities, were disregarded

because their magnitudes were considered to be of a second-order nature. These omissions are justified as long as the excluded quantities or their effects on performance characteristics remain small; however, if any one of them approaches first-order magnitude, it should not be disregarded. Such may be the case with the inertia terms. One possible reason why the calculated total effect may be in error can be found in a statement by Lamb (reference 2) in which he said, "Although the equations of motion of viscous fluids are well established, the calculations based on them are often subject to serious limitations. The reason is partly to be sought in the omission, for the sake of mathematical simplicity, of small terms of the second order in the Eulerian expressions for the accelerations, which terms are often at least as important as those due to viscosity."

Increased use of high-speed bearings and the frequent accompanying rapid rates of change of velocity aroused interest in the effect of the forces arising from the inertia terms on bearing performance. An attempt to consider all these terms simultaneously leads to equations that cannot be solved directly by ordinary mathematical methods. Of the various inertia terms, only the one influenced by a change of speed of one of the bearing surfaces has been analyzed at the NACA Cleveland laboratory and is examined herein. For the case of a journal bearing, centripetal forces are therefore not considered. The term chosen for this analysis, and the one that is included in the derivation of a differential equation for pressure distribution, expresses the rate of increase of momentum of an elementary particle of lubricant in the direction of motion. This derivation and the resulting modified Reynold's differential equation are presented. By use of this final basic equation as a starting point, it is possible to calculate any one of the many performance characteristics for a slider or a journal bearing, each result containing the effect of tangential temporal acceleration. Analyses of some of the important operating characteristics are presented.

SYMBOLS

The following symbols are used in this analysis:

a ratio of inlet to outlet film thickness of slider bearing, h_1/h_2

B breadth of slider bearing in the general direction of motion

1020

$C, C_1, C_2 \ldots$ constants of integration

c radial clearance

e eccentricity in journal bearing

F tangential force on slider

h thickness of lubricant film at any point

h_n minimum film thickness

h_1 inlet film thickness

h_2 outlet film thickness

L length of bearing perpendicular to motion

N shaft speed

n attitude, ratio of eccentricity to radial clearance

P transverse load on bearing

P_a percentage of load capacity due to acceleration

p pressure

p_a percentage of pressure due to acceleration

p_{max} maximum pressure

p_{min} minimum pressure

p_0 pressure at $\theta = 0$

Q' volume rate of flow per unit length

R rate of shear

r shaft radius

s shear stress

t time

1020

U surface speed of moving member

u fluid velocity in x-direction

v fluid velocity in y-direction

w fluid velocity in z-direction

X,Y,Z force components in x-, y-, and z-directions, respectively

x,y,z coordinate axes

x_1 x/B

γ variable in Sommerfeld substitution, $\cos^{-1} \frac{n + \cos \theta}{1 + n \cos \theta}$

θ angle to any point on shaft, measured from line of centers in direction of rotation

μ absolute viscosity

ρ mass density

ϕ angle from line of centers to load line, measured in direction of rotation

THEORY

Preliminary Considerations

In the development of the steady-state hydrodynamic theory of lubrication, a number of conventional assumptions usually have been made. Some of these assumptions are inherent in the concepts that lie behind the hydrodynamic theory and others are made to simplify mathematical analysis. All these assumptions made for steady-state motion of the lubricant (reference 3) are used herein. They include the assumptions that:

(1) The motion of the fluid is free from eddies (reference 1).

(2) The forces arising from weight and inertia in steady-state motion are small compared to the stresses arising from viscosity because the distances between the bearing surfaces in lubrication are small compared to the ratio of the viscosity to the velocity of the moving surfaces.

1020

(3) The fluid is incompressible (permissible because a relatively incompressible liquid such as oil is usually employed in lubrication).

(4) The viscosity of the lubricant is uniform throughout the film.

(5) In the case of journal bearings, the curvature of the oil film may be neglected because the radii of curvature are large compared to the oil-film thickness and the bearing surfaces may therefore be considered as being nearly parallel and undistorted.

(6) The fluid pressure is constant with respect to depth in the film because the film thickness is too small to have an appreciable variation of pressure in the y-direction.

(7) The flow is laminar.

(8) The lubricant follows Newton's law of viscous flow.

(9) There is no slip between the surfaces of the bearing and the lubricant.

Nonsteady state of motion may be superimposed on the steady state by the application of a temporal tangential acceleration to the moving bearing surface. The use of this specific type of acceleration indicates that only the effect of changing bearing speed and not velocity is considered. This superimposition cannot be made, however, when very small viscosities, or very large Reynolds numbers, exist (reference 4). Because such conditions do not occur in bearing applications, they need not be considered here.

An elementary cube of lubricant located between two bearing surfaces is shown in figure 1. The origin of the coordinates is placed on the moving member with the directions of the three axes as indicated. The velocity of the mover is U in the positive x-direction. The pressure within the film is p and is not a function of y according to assumption (6).

The force on the left face of the element is $p\,dydz$ acting in the positive x-direction. The force on the rear face is $p\,dxdy$ acting in the positive z-direction. In the distances dx and dz, the pressures increase by amounts of $(\partial p/\partial x)dx$ and $(\partial p/\partial z)dz$, respectively; therefore, the forces acting on the right and front

faces of the element in the negative x- and z-directions are $\left[p + (\partial p/\partial x)dx\right]dydz$ and $\left[p + (\partial p/\partial z)dz\right]dxdy$, respectively.

If the shear forces tend to produce a counterclockwise rotation in the xy-plane or a clockwise rotation in the yz-plane, they are considered to be positive. The force on the top face in the negative x-direction is $s_x dxdz$ where s_x is the shear stress. Similarly, the force on the same face in the negative z-direction is $s_z dxdz$. The shear stresses increase in the distance dy by $(\partial x/\partial y)dy$. Partial derivatives are used because the shear stresses vary in the x- and z-directions as well as in the y-direction. The forces on the bottom face are therefore $\left[s_x + (\partial s_x/\partial y)dy\right]dxdz$ and $\left[s_z + (\partial s_z/\partial y)dy\right]dxdz$ acting in the positive x- and z-directions, respectively. No shear forces are considered on the vertical faces because of the previous assumption of negligible vertical velocities.

The difference between the normal- and tangential-force increments in any given direction is equal to the rate of increase of the momentum of the element in that direction. This statement may be mathematically indicated by

$$\left.\begin{aligned}
&p\,dydz - \left(p + \frac{\partial p}{\partial x}dx\right)dydz - s_x dxdz + \left(s_x + \frac{\partial s_x}{\partial y}dy\right)dxdz = \rho\frac{\partial u}{\partial t}dxdydz \\
&p\,dxdz - p\,dxdz - 0 + 0 = 0 \\
&p\,dxdy - \left(p + \frac{\partial p}{\partial z}\right)dxdy - s_z dxdz + \left(s_z + \frac{\partial s_z}{\partial y}dy\right)dxdz = \rho\frac{dw}{dt}dxdydz
\end{aligned}\right\} \qquad (1)$$

By simplification,

$$\left.\begin{aligned} \frac{\partial p}{\partial x} + \rho \frac{\partial u}{\partial t} &= \frac{\partial s_x}{\partial y} \\ \frac{\partial p}{\partial y} &= 0 \\ \frac{\partial p}{\partial z} + \rho \frac{\partial w}{\partial t} &= \frac{\partial s_z}{\partial y} \end{aligned}\right\} \tag{2}$$

Newton's law of viscous flow states that the rate of shear is directly proportional to the stress and inversely proportional to the viscosity of the fluid, or

$$R = \frac{s}{\mu}$$

and because the rate of shear is the ratio of the change of velocity in a small distance dy to the distance dy, then

$$\left.\begin{aligned} s_x &= \mu \frac{\partial u}{\partial y} \\ s_y &= 0 \\ s_z &= \mu \frac{\partial w}{\partial y} \end{aligned}\right\} \tag{3}$$

When these values of s are introduced into equation (2), the following equations are obtained:

$$\left.\begin{aligned} \frac{\partial p}{\partial x} + \rho \frac{\partial u}{\partial t} &= \mu \frac{\partial^2 u}{\partial y^2} \\ \frac{\partial p}{\partial y} &= 0 \\ \frac{\partial p}{\partial z} + \rho \frac{\partial w}{\partial t} &= \mu \frac{\partial^2 w}{\partial y^2} \end{aligned}\right\} \tag{4}$$

Basic Differential Equation

For further mathematical simplification of equations (4), it may be assumed that the pressure is uniform in the z-direction.

This assumption is the same as assuming that the bearing is infinitely long in the z-direction or, in other words, that there is no side leakage. These equations now reduce to

$$\frac{dp}{dx} + \rho \frac{du}{dt} = \mu \frac{\partial^2 u}{\partial y^2} \tag{5}$$

With no slipping of the lubricant at the boundaries, the temporal tangential acceleration of a particle of oil is equal to zero at the stationary bearing surface and is equal to the acceleration $\frac{dU}{dt}$ of the moving member at its surface. In other words, if h is the thickness of the film at any x, then

$$\left.\begin{aligned} \frac{du}{dt} &= \frac{dU}{dt} \quad \text{when} \quad y = 0 \\ \frac{du}{dt} &= 0 \quad \text{when} \quad y = h \end{aligned}\right\} \tag{6}$$

If the acceleration at any point within the film due to the change of speed of the moving surface is assumed to be linearly proportional to the distance from this surface, then

$$\frac{du}{dt} = \left(\frac{h - y}{h}\right) \frac{dU}{dt} \tag{7}$$

The validity of this assumption over wide ranges of acceleration can be demonstrated if the solution of an analogous heat-conduction problem -- temperatures in a bar with special end temperatures (reference 5) -- in which the variables have been changed to correspond with the ones in equation (6), is differentiated with respect to time to give the acceleration distribution.

When equation (7) is substituted in equation (5) and the result rearranged,

$$\frac{\partial^2 u}{\partial y^2} = \frac{1}{\mu} \frac{dp}{dx} + \left(\frac{h - y}{h}\right) \frac{\rho}{\mu} \frac{dU}{dt} \tag{8}$$

In order to find the velocity u, it is necessary to integrate twice with respect to y while holding x constant.

$$\frac{\partial u}{\partial y} = \frac{y}{\mu}\ \frac{dp}{dx} + \left(y - \frac{y^2}{2h}\right)\frac{\rho}{\mu}\ \frac{dU}{dt} + C_1$$

$$u = \frac{y^2}{2\mu}\ \frac{dp}{dx} + \left(\frac{y^2}{2} - \frac{y^3}{6h}\right)\frac{\rho}{\mu}\frac{dU}{dt} + C_1 y + C_2$$

The boundary conditions are similar to those of equations (6).

$$\left.\begin{aligned} u &= U \quad \text{when} \quad y = 0 \\ u &= 0 \quad \text{when} \quad y = h \end{aligned}\right\} \tag{9}$$

With these limits,

$$C_1 = -\frac{h}{2\mu}\ \frac{dp}{dx} - \frac{U}{h} - \frac{h}{3}\ \frac{\rho}{\mu}\ \frac{dU}{dt}$$

$$C_2 = U$$

thus

$$u = \frac{U}{h}(h-y) - \frac{y}{2\mu}(h-y)\frac{dp}{dx} - \frac{y\rho}{6\mu h}(2h-y)(h-y)\frac{dU}{dt} \tag{10}$$

and

$$\frac{\partial u}{\partial y} = -\frac{U}{h} + \frac{1}{2\mu}(2y-h)\frac{dp}{dx} - \frac{\rho}{6\mu}\left(2h - 6y + \frac{3y^2}{h}\right)\frac{dU}{dt} \tag{11}$$

The volume of oil Q' passing through any cross section of unit width in the film in the yz-plane in unit time is given by

$$Q' = \int_0^h u\,dy$$

The expression for u in equation (10) can be substituted into this equation for flow to give

$$Q' = \frac{Uh}{2} - \frac{h^3}{12\mu}\ \frac{dp}{dx} - \frac{\rho h^3}{24\mu}\ \frac{dU}{dt} \tag{12}$$

With the assumption of no side leakage, the principle of continuity shows that

$$\frac{dQ'}{dx} = 0$$

therefore, by differentiating equation (12),

$$\frac{dQ'}{dx} = \frac{U}{2}\frac{dh}{dx} - \frac{d}{dx}\left(\frac{h^3}{12\mu}\frac{dp}{dx} + \frac{\rho h^3}{24\mu}\frac{dU}{dt}\right) = 0$$

or

$$U\frac{dh}{dx} = \frac{d}{dx}\left(\frac{h^3}{6\mu}\frac{dp}{dx} + \frac{\rho h^3}{12\mu}\frac{dU}{dt}\right) \tag{13}$$

This equation is similar to Reynolds' differential equation for pressure distribution except that side leakage is neglected and the effects of tangential temporal bearing acceleration are included.

Integration of equation (13) with respect to x gives

$$\frac{dp}{dx} = 6\mu U\left(\frac{1}{h^2} - \frac{C_3}{h^3}\right) - \frac{\rho}{2}\frac{dU}{dt} \tag{14}$$

which is a more convenient form of equation (13).

With this basic expression for the pressure gradient, it is possible to make theoretical determinations of the load capacity, frictional resistance, power loss, film thickness at maximum pressure, oil flow rate, and other operating characteristics of both slider and journal bearings, all containing the effects of acceleration.

Slider Bearing

Pressure distribution. - The integration of equation (14) gives the pressure at any point within the film of lubricant; but before this integration can be done, h must be expressed in terms of some function of x.

1020

A brief description of the slider bearing is presented to indicate the correlation between the various parts. A typical slider bearing is shown in figure 2. An applied force F moves the top bearing member in the direction indicated with a velocity U. If the applied force is not constant, the velocity will vary and can be indicated by an acceleration or deceleration $\pm \frac{dU}{dt}$. The lower member is stationary except for a self-adjusting tilting motion made possible by the pivot. The vertical load supported by the bearing is P. The origin of the coordinate axes is placed on the moving slider. Subscripts 1 and 2 refer to the inlet and outlet edges of the bearing, respectively. The length of the shoe is L and its breadth B. In the case of slider bearings, the slopes of the films are so small that the projection of the breadth of the shoe on the x-axis can be considered equal to B. The following relation is found by using similar triangles:

$$h = h_1 - \frac{x}{B}(h_1 - h_2) \tag{15}$$

for convenience, let

$$x_1 = \frac{x}{B}$$

and

$$a = \frac{h_1}{h_2}$$

The arbitrary subscript of x does not refer to the inlet point, but is used only because of convention.

Equation (15) becomes

$$h = h_2 (a - ax_1 + x_1) \tag{16}$$

Equation (14) can now be integrated if h is replaced by its equivalent, shown in equation (16). After the introduction of equation (16), the resulting expression is

$$\frac{dp}{dx_1} = \frac{6\mu UB}{h_2^2}\left[\frac{1}{(a-ax_1 + x_1)^2} - \frac{C_3}{h_2(a-ax_1 + x_1)^3}\right] - \frac{\rho B}{2}\frac{dU}{dt} \tag{17}$$

Integration with respect to x_1 gives

$$p = \frac{6\mu UB}{h_2^2}\left[\int \frac{dx_1}{(a-ax_1+x_1)^2} - \frac{C_3}{h_2}\int \frac{dx_1}{(a-ax_1+x_1)^3}\right] - \frac{\rho B}{2}\frac{dU}{dt}\int dx_1$$

$$p = \frac{6\mu UB}{h_2^2}\left[\frac{-1}{(1-a)(a-ax_1+x_1)} + \frac{C_3}{2h_2(1-a)(a-ax_1+x_1)^2}\right] - \frac{\rho B}{2}\frac{dU}{dt}x_1 + C_4 \tag{18}$$

The boundary conditions are

$$p = 0 \quad \text{when} \quad x_1 = 0$$

and

$$p = 0 \quad \text{when} \quad x_1 = 1$$

By using these conditions, the constants C_3 and C_4 can be found.

$$\left.\begin{aligned} C_3 &= \frac{2a}{a+1}\,h_2 - \frac{\rho h_2^3 a^2}{6\mu U(a+1)}\frac{dU}{dt} \\ C_4 &= \frac{6\mu UB}{h_2^2}\left[\frac{1}{(1-a^2)} + \frac{\rho h_2^2}{12\mu U\,(1-a^2)}\frac{dU}{dt}\right] \end{aligned}\right\} \tag{19}$$

When the values of these constants of integration are substituted in equation (18), the resulting equation gives the pressure at any point within the film.

$$p = \frac{6\mu UB}{h_2^2}\left[\frac{x_1(a-1)(1-x_1)}{(a+1)(a-ax_1+x_1)^2}\right] + \frac{B\rho}{2(a^2-1)}\frac{dU}{dt}\left[\frac{a^2}{(a-ax_1+x_1)^2} + (x_1-a^2x_1-1)\right] \tag{20}$$

1020

The first term on the right-hand side of equation (20) is the same as the expression usually obtained without considering acceleration. The second term is the contribution to pressure made by the acceleration. An examination of the second term reveals that the portion within the brackets is dimensionless and is dependent only on a and x_1 and that the quantity $\frac{B\rho}{2(a^2-1)} \frac{dU}{dt}$ has the dimensions of pressure. Substitution of positive numerical values into this acceleration term yields a result that is always negative; therefore, at any speed an accelerating slider always produces less pressure at a given point than a similar slider operating with no acceleration. Let p_a be the fraction of the pressure due to acceleration, then

$$p_a = \frac{p \text{ (with acceleration)} - p \text{ (without acceleration)}}{p \text{ (without acceleration)}} \tag{21}$$

and

$$p_a = \frac{\rho h_2^2}{12\mu U} \frac{dU}{dt} \left[\frac{-\left(a^4-3a^2+2a\right) + \left(a^4-2a^3+2a-1\right)x_1}{(a-1)^2} \right] \tag{22}$$

For a given slider bearing, the various factors in equation (22) are usually known or can be determined or satisfactorily estimated. The values can then be substituted in this equation to find p_a. The quantity within the brackets approaches -3 as a approaches 1. This limit can be determined by L'Hospital's rule. In other words, when the two bearing surfaces are parallel,

$$p_a = -\frac{\rho h_2^2}{4\mu U} \frac{dU}{dt}$$

Load capacity. - One of the most important operating characteristics of a bearing is its load capacity. For a slider bearing, it can be computed from the pressure obtained from equation (20). The total force on the shoe, or, because the slider inclination is small, the load supported by the bearing, is P expressed as

$$P = L \int_0^B p\,dx = LB \int_0^1 p\,dx_1$$

1020

$$P = \frac{6\mu ULB^2}{h_2^{\,2}} \int_0^1 \left[\frac{x_1(a-1)(1-x_1)}{(a+1)(a-ax_1 + x_1)^2} \right] dx_1$$

$$+ \frac{LB^2\rho}{2(a^2-1)} \frac{dU}{dt} \int_0^1 \left[\frac{a^2}{(a-ax_1 + x_1)^2} + (x_1-a^2x_1-1) \right] dx_1$$

$$= \frac{6\mu ULB^2}{h_2^{\,2}(a-1)^2} \left[\log_e a - \frac{2(a-1)}{(a+1)} \right] - \frac{LB^2\rho(a-1)}{4(a+1)} \frac{dU}{dt} \qquad (23)$$

The first term on the right-hand side of equation (23) represents the load capacity of a slider bearing with no acceleration. The negative contribution to the load capacity made by a positive acceleration is given by the second term. Necessarily, the second term has the dimensions of force. The percentage contribution by the acceleration term can be found in a manner similar to the one used for pressures in equation (21). The result is

$$P_a = - \left(\frac{1}{\frac{\mu}{\rho}} \right) \left(\frac{\frac{dU}{dt}}{U} \right) \left(h_2^{\,2} \right) \left[\frac{(a-1)^3}{24(a+1) \log_e a - 48(a-1)} \right] \times 100 \qquad (24)$$

The change in load-carrying capacity is seen to vary directly as the acceleration of the slider, the square of the minimum film thickness, and a dimensionless quantity depending only on a, and inversely as the kinematic viscosity of the lubricant and the speed of the slider. Suitable values are easily obtainable for the solution of this equation and the determination of P_a.

Journal Bearing

Pressure distribution. - A full journal bearing may be depicted as in figure 3. The adjective "full" signifies that the oil film extends over the entire 360° of the bearing. The centers of the bearing and of the shaft are at O and O', respectively. The radius of the shaft is r, the radial clearance between the shaft and the bearing is c, the shaft speed is N (in rpm), the shaft acceleration is $\frac{dN}{dt}$, the surface speed is U, the surface acceleration is $\frac{dU}{dt}$, the distance between O and O' in the operating bearing is the eccentricity e, the load is P, the film thickness at any point is h, and the minimum film thickness is h_n. The angle ϕ, measured in the direction of rotation, is the angle from O'O to the load line. The angle θ, measured in the same direction and from the same line, is the angle to any point on the shaft. Because the eccentricity is very small compared to the radius, it can be shown (reference 3) that the following equation is nearly correct:

$$h = c + e \cos \theta \tag{25}$$

When the attitude n is introduced $\left(n = \frac{e}{c}\right)$, a dimensionless form of equation (25) is obtained.

$$\frac{h}{c} = 1 + n \cos \theta \tag{26}$$

In the derivation of the pressure distribution for a full journal bearing that includes the effects of acceleration, all the assumptions made for the slider-bearing theory apply. The starting point is the modified Reynolds' equation (14). If dx is taken as being equal to $r\,d\theta$, then equation (14) becomes

$$\frac{dp}{d\theta} = 6\mu U r \left[\frac{1}{c^2(1+n \cos \theta)^2} - \frac{C}{c^3(1+n \cos \theta)^3}\right] - \frac{\rho r}{2}\frac{dU}{dt} \tag{27}$$

In order to find the resultant fluid pressure, Reynolds (reference 1) used Fourier series to solve his equation but could not obtain results for all values of eccentricity because of convergence requirements of the series. Sommerfeld employed a substitution with which

he circumvented this difficulty (reference 6). He devised a relation between the angle θ and a fictitious angle γ, which can be indicated as in figure 4. The angle γ has a range from 0 to 2π corresponding to a range from 0 to 2π for θ. When γ is substituted for θ in equation (27) and the resulting equation is integrated, the following expression is obtained:

$$\int dp = \frac{6\mu Ur}{c^2} \frac{1}{(1-n^2)^{3/2}} \int_0^{\gamma} (1-n \cos \gamma)\, d\gamma$$

$$- \frac{6\mu UrC}{c^3} \frac{1}{(1-n^2)^{5/2}} \int_0^{\gamma} (1-n \cos \gamma)^2\, d\gamma$$

$$- \frac{\rho r}{2} \frac{dU}{dt} \sqrt{1-n^2} \int_0^{\gamma} \frac{d\gamma}{(1-n \cos \gamma)} \tag{28}$$

If p_0 is the pressure at $\theta = 0$, as shown in figure 3, then the pressure rise is

$$p - p_0 = \left(\frac{6\mu Ur}{c^2}\right) \left(\frac{1}{(1-n^2)^{3/2}}\right) \left(\gamma - n \sin \gamma\right)$$

$$- \left(\frac{6\mu UrC}{c^3}\right) \left(\frac{1}{(1-n^2)^{5/2}}\right) \left(\gamma - 2n \sin \gamma + \frac{\gamma n^2}{2} + \frac{n^2 \sin \gamma \cos \gamma}{2}\right)$$

$$- \frac{\rho r}{2} \frac{dU}{dt} \tan^{-1} \frac{\sqrt{1-n^2} \sin \gamma}{\cos \gamma - n} \tag{29}$$

Inasmuch as the rise in pressure from $\theta = 0$ to $\theta = 2\pi$ is zero, the constant of integration can be evaluated as

$$C = \frac{2c(1-n^2)}{(2+n^2)} - \frac{(1-n^2)^{5/2} \rho c^3}{6\mu U(2+n^2)} \frac{dU}{dt} \tag{30}$$

Substitution of this value of C in equation (29) and the proper replacement of γ with θ yield an equation that gives the pressure at any point within the film,

$$p = \frac{6\mu Ur}{c^2}\left[\frac{n \sin\theta(2+n\cos\theta)}{(1+n\cos\theta)^2(2+n^2)}\right] + \left[\frac{n\sin\theta(n^2-4-3n\cos\theta)\sqrt{1-n^2}}{2(1+n\cos\theta)^2\,(2+n^2)}\right]\rho r\frac{dU}{dt}$$

$$+ \cos^{-1}\left(\frac{\cos\theta+n}{1+n\cos\theta}\right)\frac{\rho r}{2}\frac{dU}{dt} - \frac{\rho r}{2}\frac{dU}{dt}\,\theta + p_0 \tag{31}$$

The first term on the right-hand side of equation (31) is the same as the variable pressure developed in an oil film with no regard for acceleration. The second, third, and fourth terms represent the contribution to the pressure made by the acceleration. The last term is the constant pressure that exists at $\theta = 0$.

The pressure variation in a typical journal bearing for various values of acceleration is graphically shown in figure 5 with the data upon which the calculations were based. As in the case of the slider bearing, the contribution made by the acceleration is a negative one; that is, the resultant of the fluid pressures in the film surrounding the shaft becomes smaller as acceleration increases.

Load capacity. - If reference axes in figure 3 are taken so that the OX axis coincides with O'O, the OY axis is perpendicular to OX, and the shaft center is the origin, then the load can be expressed in terms of x and y components.

The x component is

$$P\cos\phi = L\int_0^{2\pi} p\cos\theta r\,d\theta \tag{32}$$

where L is the axial length of the bearing. When equation (32) is integrated by parts,

$$P\cos\phi = Lr\Big[p\sin\theta\Big]_0^{2\pi} - Lr\int_0^{2\pi}\frac{dp}{d\theta}\sin\theta\,d\theta \tag{33}$$

The first term on the right-hand side of equation (33) drops out and the second term may be integrated if the expression for $\frac{dp}{d\theta}$ from equation (27) is employed.

$$P \cos \phi = - \frac{6\mu ULr^2}{c^2} \left[\frac{1}{n(1+n \cos \theta)} - \frac{C}{2cn(1+n \cos \theta)^2} \right]_0^{2\pi}$$

$$- Lr \frac{\rho r}{2} \frac{dU}{dt} \left[\cos \theta \right]_0^{2\pi} \tag{34}$$

By evaluation,

$$P \cos \phi = 0 \tag{35}$$

therefore, the x component is zero, ϕ is equal to 90°, and the load acts along the OY axis.

The y component is

$$P \sin \phi = L \int_0^{2\pi} p \sin \theta \, r d\theta \tag{36}$$

Because $\sin \phi = 1$, this component is the load itself. When equation (36) is integrated by parts,

$$P = - rL \left[p \cos \theta \right]_0^{2\pi} + rL \int_0^{2\pi} \frac{dp}{d\theta} \cos \theta \, d\theta \tag{37}$$

Again, the first term on the right-hand side drops out and the proper expression for $\frac{dp}{d\theta}$ from equation (27) is substituted in equation (37).

$$P = rL \int_0^{2\pi} \left[\frac{6\mu Ur \cos \theta}{c^2(1+n \cos \theta)^2} - \frac{6\mu UrC \cos \theta}{c^3(1+n \cos \theta)^3} - \frac{\rho r}{2} \frac{dU}{dt} \cos \theta \right] d\theta \tag{38}$$

1020

The load capacity P can be found if the integrands are converted to partial fractions and the resulting integrals are evaluated with the help of Sommerfeld's substitutions. The constant of integration has already been determined in equation (30).

$$P = \frac{12\pi n\mu U r^2 L}{c^2(2+n^2)\sqrt{1-n^2}} - \left[\frac{3\pi n r^2 L\rho}{(2+n^2)}\right]\frac{dU}{dt} \tag{39}$$

or

$$P = \frac{2\pi^2 n\mu r^3 LN}{5c^2(2+n^2)\sqrt{1-n^2}} - \left[\frac{\pi^2 n r^3 L\rho}{10(2+n^2)}\right]\frac{dN}{dt} \tag{40}$$

The first term on the right-hand side of equation (39) or (40) is the usual expression for the load capacity of a journal bearing in which no acceleration effects are considered. The second term is the amount by which normal load capacity is decreased because of the presence of acceleration.

As in the case of the slider bearing, the percentage decrease in load capacity of a journal bearing due to acceleration is found by dividing the amount of the decrease by the normal load capacity.

$$P_a = -\left(\frac{1}{\frac{\mu}{\rho}}\right)\left(\frac{\frac{dU}{dt}}{U}\right)\left(\frac{c^2\sqrt{1-n^2}}{4}\right)\times 100 \tag{41}$$

or

$$P_a = -\left(\frac{1}{\frac{\mu}{\rho}}\right)\left(\frac{\frac{dN}{dt}}{N}\right)\left(\frac{c^2\sqrt{1-n^2}}{4}\right)\times 100 \tag{42}$$

where the speed and acceleration of the bearing can be expressed by either of the two methods.

An examination of equations (41) and (42) reveals that the percentage change due to acceleration varies directly as the acceleration of the bearing, the square of the radial clearance, and a function of the attitude, and inversely as the kinematic viscosity of the

lubricant and the speed of the bearing. It should be noted that the size of the bearing does not appear in the equation. Of the various factors involved, the acceleration-speed ratio is the most significant; this significance is subsequently emphasized. The relation between the radial clearance and the attitude in the third factor of equations (41) and (42) is graphically illustrated in figures 6 and 7. It can be seen from an inspection of the factor containing the kinematic viscosity μ/ρ that the greater the density of the oil or the lower its absolute viscosity, the greater will be the total effect on P_a. 1020

In order to facilitate the solution of equation (42) when actual numerical values are used, nomographs have been prepared. Because speed usually varies over wide ranges, two charts, practically the same except for the working limits of N, are presented in figure 8. Conversions of some of the units have been made for further simplification. Sample solutions, shown on the nomographs, indicate the method to be used in determining P_a. A value of P_a can be obtained quickly if the following are known: specific gravity of the lubricant, viscosity in centipoises, bearing acceleration in revolutions per minute per second, bearing speed in revolutions per minute, radial clearance in inches, and attitude.

APPLICATIONS

The equations derived can be used to determine the effect of acceleration on the load capacity of high-speed journal bearings such as those of a current turbojet engine. During an investigation in the NACA Cleveland altitude wind tunnel, such an engine was accelerated as rapidly as limitations on vibration and afterburning permitted. Engine speed was increased from 5000 to 17,000 rpm in 16.8 seconds in the manner indicated in figure 9. It can be seen from the figure that the acceleration was not constant, the maximum acceleration of 1176 rpm per second occurring at 17,000 rpm. The effect of this acceleration on the load capacity of a journal bearing within the unit can be determined readily from equation (42). The following conditions were known for the test: A commercial oil was used; the oil temperature leaving the bearing was 200° F; and the total clearance in the 2-inch journal bearing was 0.005 inch. The attitude of the bearing was assumed to be 0.5. The difference between the load capacities calculated for the prevailing conditions and for steady-state operation at 17,000 rpm was found to be negligible. When the ranges of the various variables involved in equation (42) are examined, it is found that the acceleration-speed

1020

ratio is the most important factor. In the example just cited, this ratio is about 0.07. It is small because the denominator, that is, the bearing velocity, is so large. In the case of journal bearings in jet engines now being used, this ratio has been calculated and found to be very small in all cases. It therefore appears that failure of such bearings is not induced by changes in bearing characteristics caused by bearing acceleration.

Many examples exist, however, in which this acceleration-speed ratio is high and the effects of acceleration are considerable. Reciprocating-engine piston rings, for example, can be considered slider bearings. For certain values of the crank angle, the acceleration-speed ratio becomes so large that the decrease in load capacity due to the temporal tangential acceleration is almost of the same magnitude as the steady-state load capacity. In such instances, the lubricating film may break down and permit metal-to-metal contact. Generally, large values of the acceleration-speed ratio and resultant large values of P_a are found in cases in which the bearing motion is alternating; that is, where the speed varies not only in magnitude but in direction. Near the reversal points, the speed approaches zero, the acceleration approaches its maximum, and the ratio of the acceleration to the speed becomes large.

These equations may be applicable to gear problems. In spur gears, for example, the relative movement between the teeth in contact is a combination of sliding and rolling motion. If hydrodynamic lubrication exists between the gear teeth, the application of the equations for slider bearings determines the change in load capacity, which, in turn, may be related to the important problem of gear-teeth pitting.

Another application for these equations is found in the conversion of conditions of uniform speed and dynamic loads to an equivalent set of variable velocities and a unidirectional constant load. A conversion of this type should be used when an analysis of an investigation of varying loads indicates that the experimental work could be simplified by its use; however, great care must be exercised in the choice and validity of the equivalency. A similar but reversed procedure was followed by Swift in reference 7 where it is shown that part of the presented analysis of fluctuating loads in sleeve bearings can also be applied to small cyclical variations of speed.

SUMMARY OF RESULTS

A theoretical analysis was made of the effects of the inclusion of a term expressing the rate of increase of momentum of an elementary particle of lubricant in the direction of motion in hydrodynamic theory as applied to lubrication. A number of conventional assumptions are discussed and applied in equations that establish fundamental relations and that show the effects of temporal tangential bearing acceleration on pressure distribution and load capacity. 1020

One important unknown has been the qualitative contribution to load capacity made by the acceleration of a bearing. This investigation showed that acceleration causes a decrease in load capacity. The equations indicated that the most important factor is the ratio of acceleration to speed. When this ratio is high, the effect of acceleration is large; when it is low, the effect is small. It was found that during acceleration the load capacity of a bearing is decreased by an amount that is dependent on the ratio of acceleration to speed.

In the case of journal bearings in jet engines now being used, it was determined that failure of such bearings is not induced by changes in bearing characteristics caused by bearing acceleration.

For certain values of the crank angle in reciprocating engines, the acceleration-speed ratio of the piston rings, which can be considered as slider bearings, becomes so large that the decrease in load capacity due to the temporal tangential acceleration is almost of the same magnitude as the steady-state load capacity. In such instances, the lubricating film may break down and permit metal-to-metal contact. This condition is not limited to piston rings, but also exists for the general case of reciprocating bearings.

Lewis Flight Propulsion Laboratory,
National Advisory Committee for Aeronautics,
Cleveland, Ohio, August 30, 1948.

REFERENCES

1. Reynolds, Osborne: On the Theory of Lubrication and Its Application to Mr. Beauchamp Tower's Experiments, Including an Experimental Determination of the Viscosity of Olive Oil. Phil. Trans. Royal Soc., ser. A, vol 177, pt. I, 1886, pp. 157-234.

2. Lamb, Horace: Hydrodynamics. Cambridge Univ. Press, 6th ed., 1932, p. 581.

3. Norton, Arthur Edwin: Lubrication. McGraw-Hill Book Co., Inc., 1942, pp. 66-67, 107-108.

4. Prandtl, L.: The Mechanics of Viscous Fluids. Vol. III of Aerodynamic Theory, div. G, sec. 13, W. F. Durand, ed., Julius Springer (Berlin), 1943, pp. 80-82.

5. Churchill, Ruell V.: Modern Operational Mathematics in Engineering. McGraw-Hill Book Co., Inc., 1944. p. 144.

6. Sommerfeld, A.: Zur hydrodynamischen Theorie der Schmiermittelreibung. Z. f. Math. u. Phys., Bd. 50, 1904, S. 97-155.

7. Swift, Herbert Walker: Fluctuating Loads in Sleeve Bearings. Proc. Inst. Civil Eng., vol. 5, Feb.-April 1937, pp. 161-195.

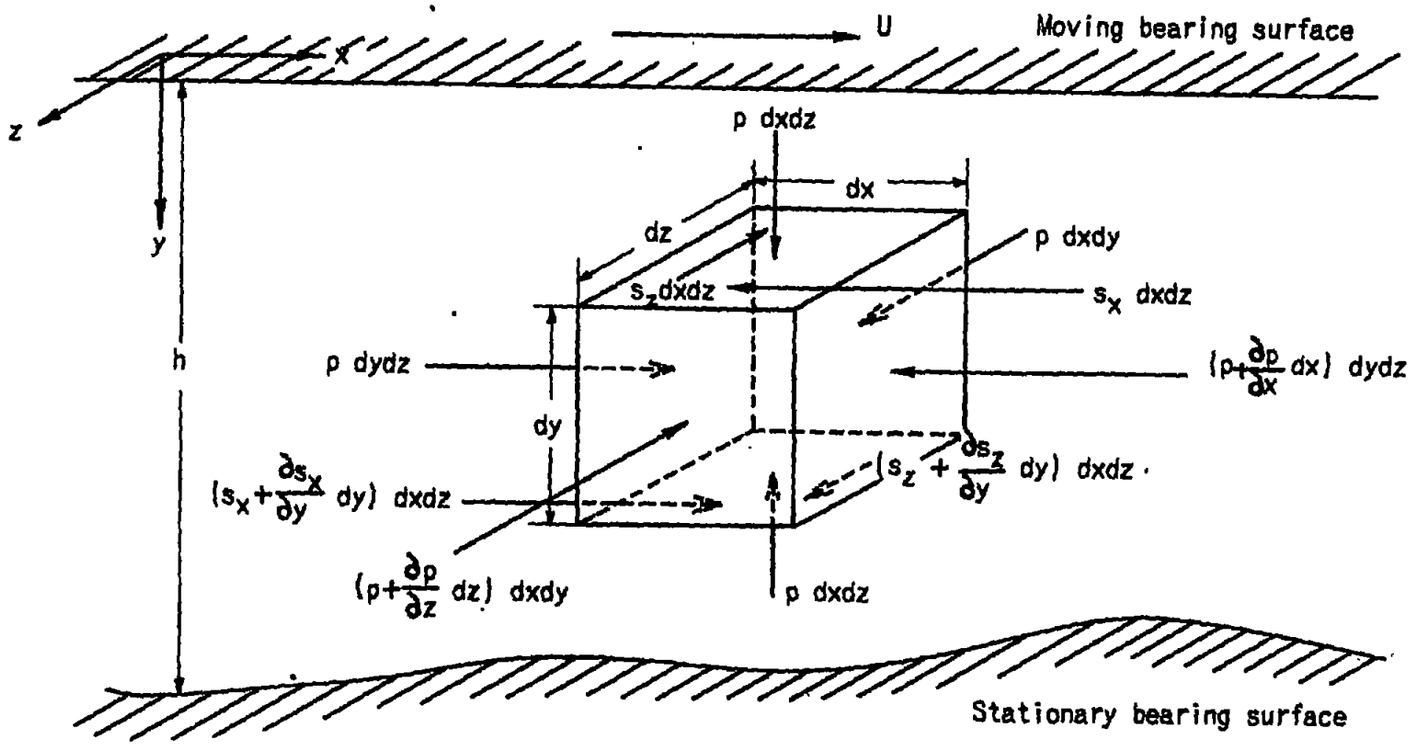

Figure 1. - Forces acting on an elementary cube of lubricant between two bearing surfaces.

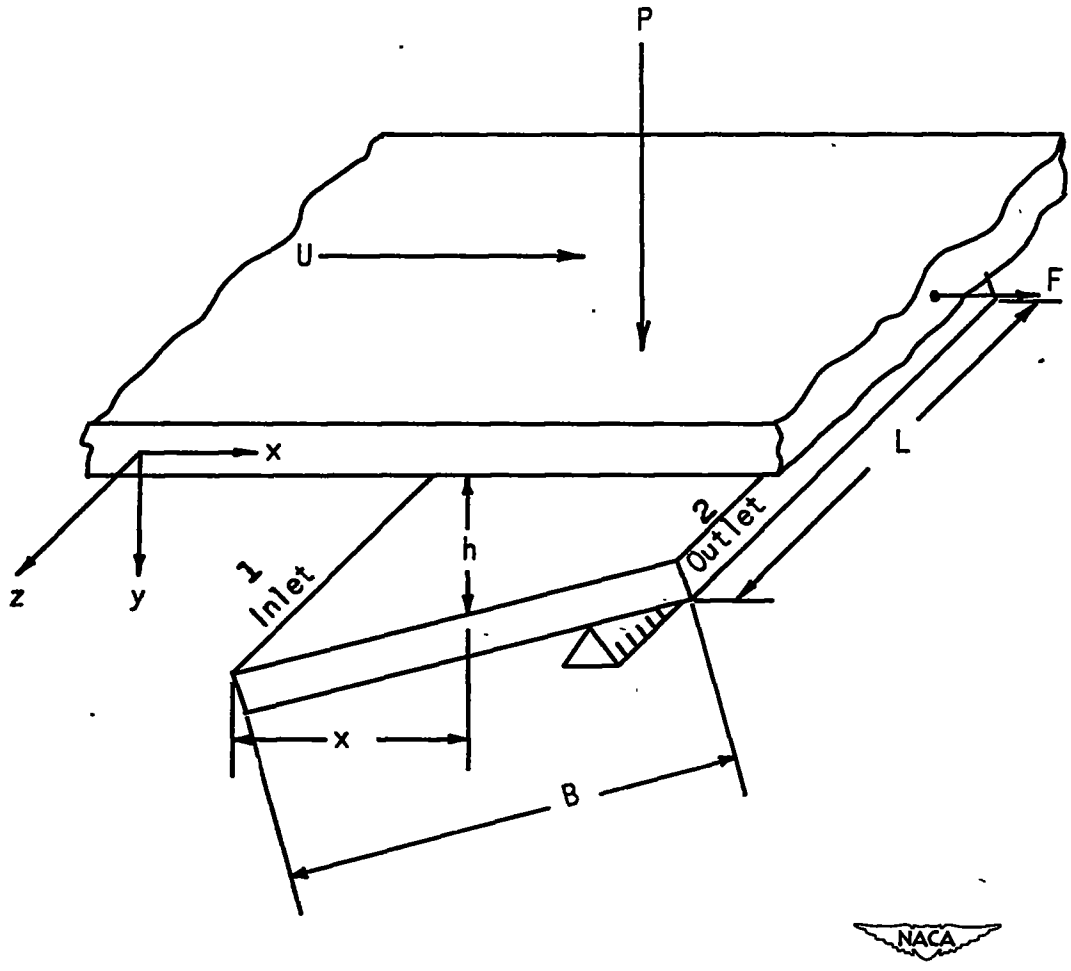

Figure 2. - Slider bearing.

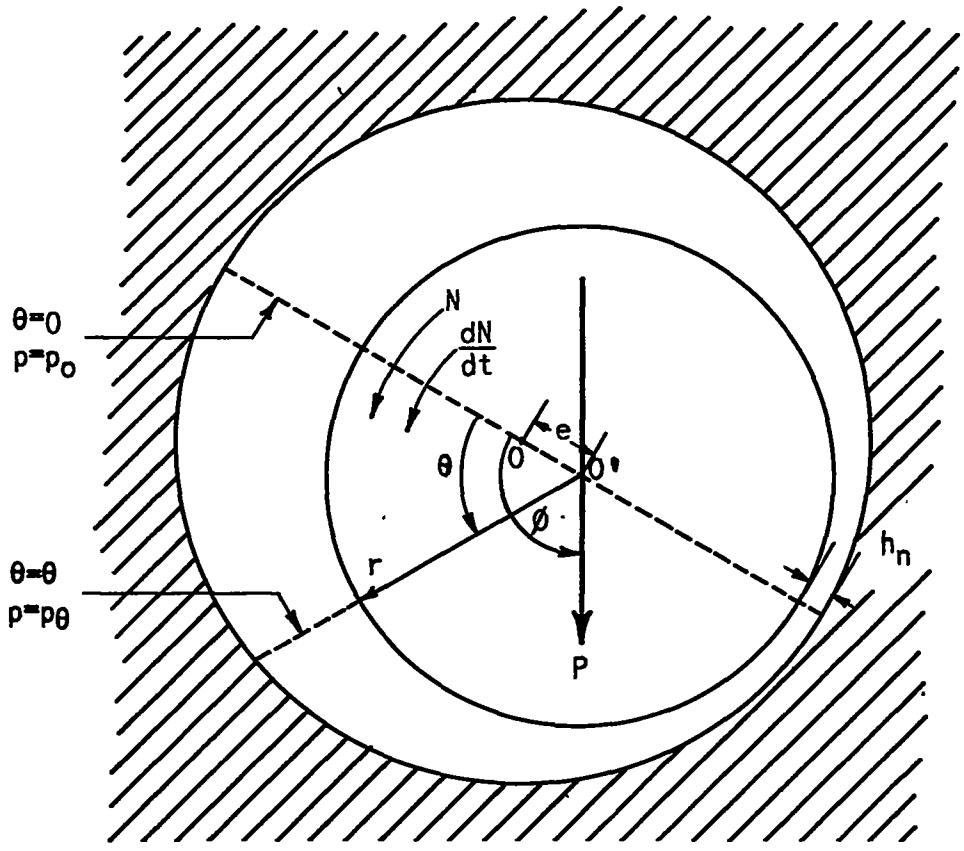

Figure 3. – Full journal bearing.

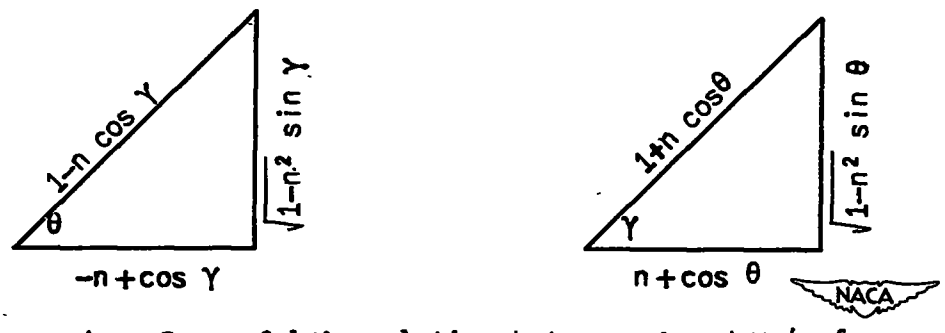

Figure 4. – Sommerfeld's relation between θ and γ (reference 6) interpreted geometrically.

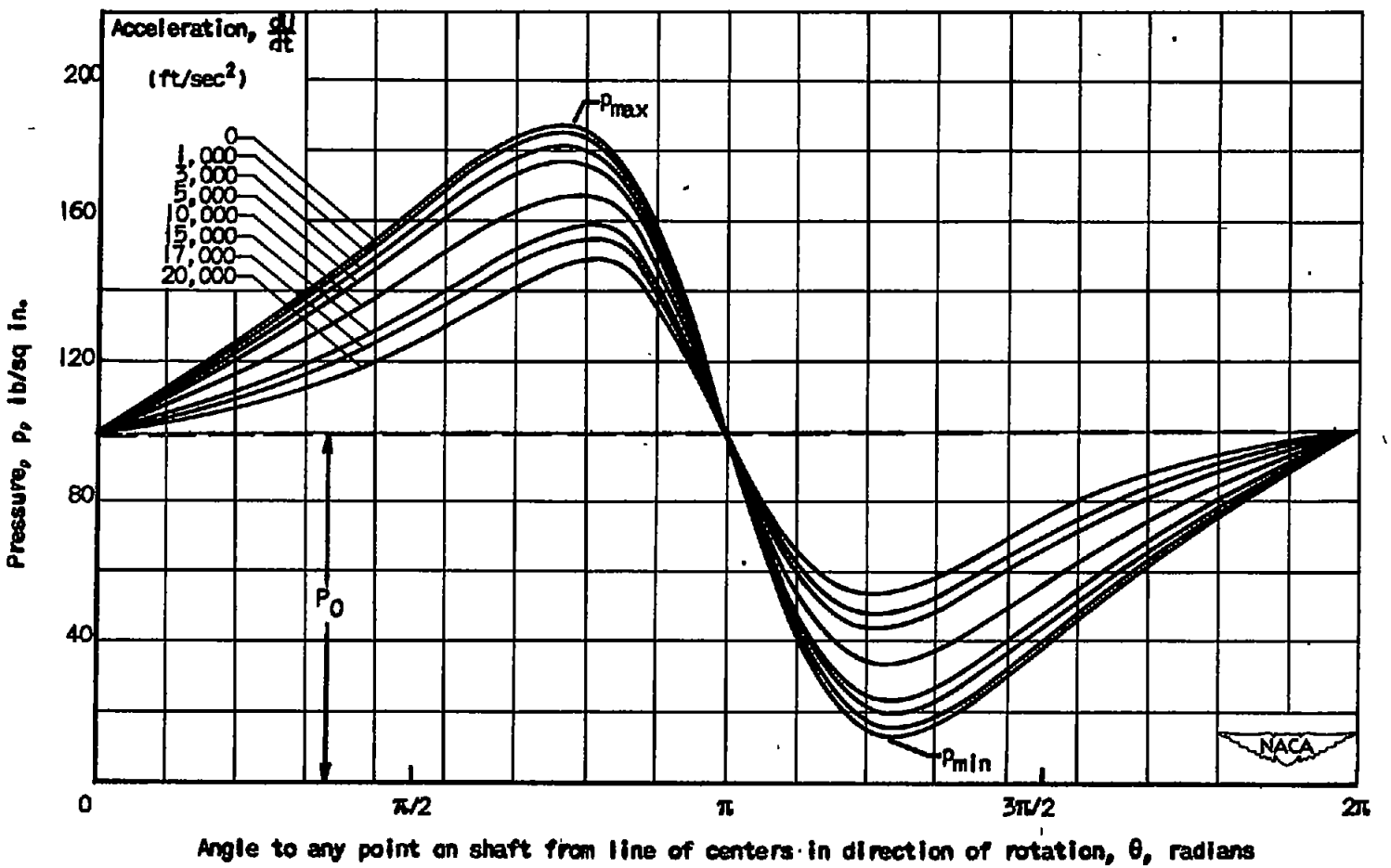

Figure 5. – Pressure variation in journal bearing for various values of acceleration. r, 3 inches; c, 0.008 inch; μ, $2/10^6$ reyns; U, 250 inches per second; n, 0.5; ρ, 0.000083 (lb-sec²/in.⁴); p_0, 100 pounds per square inch.

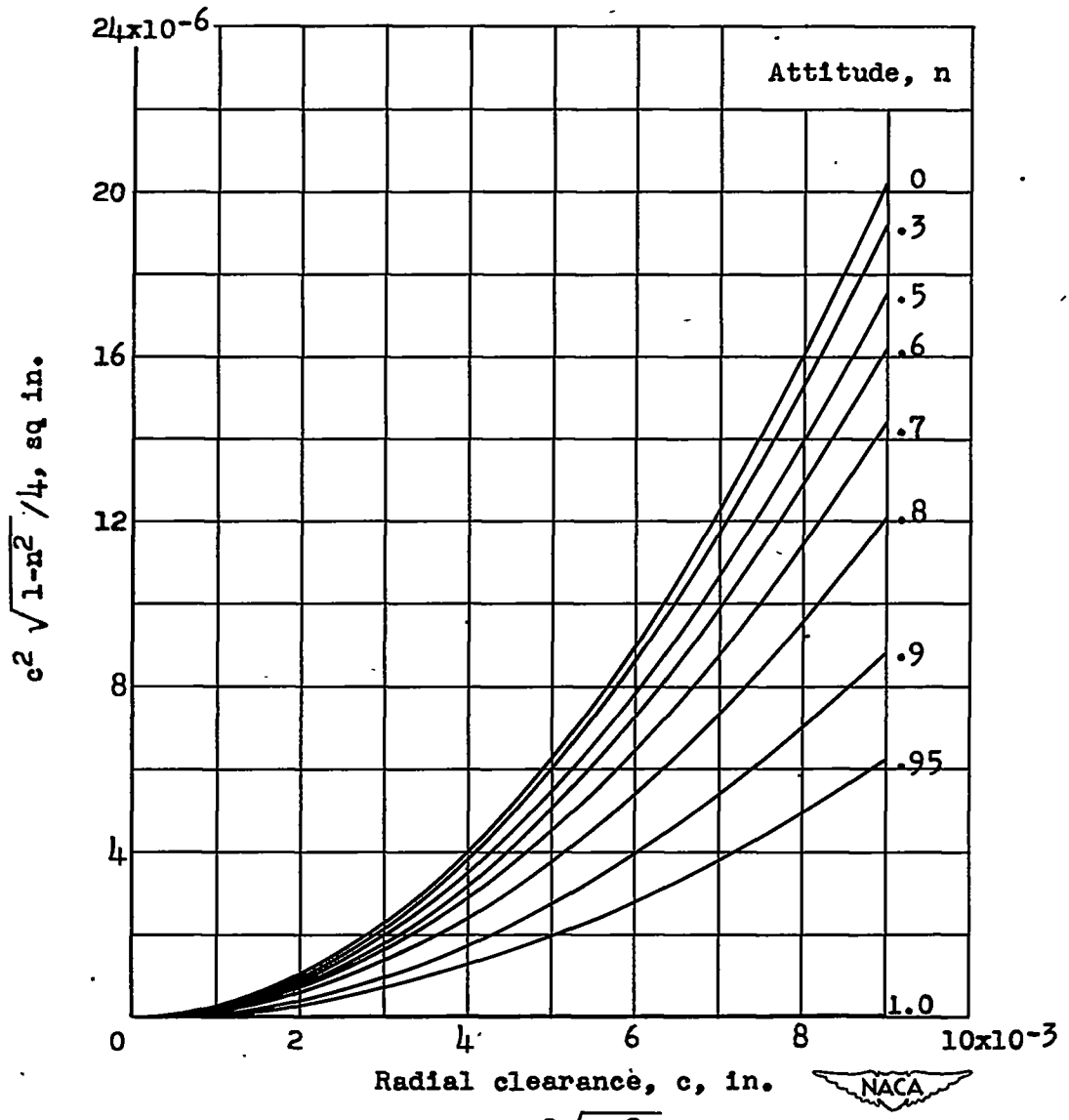

Figure 6. - Variation of $c^2\sqrt{1-n^2}/4$ with radial clearance for various values of attitude.

1020

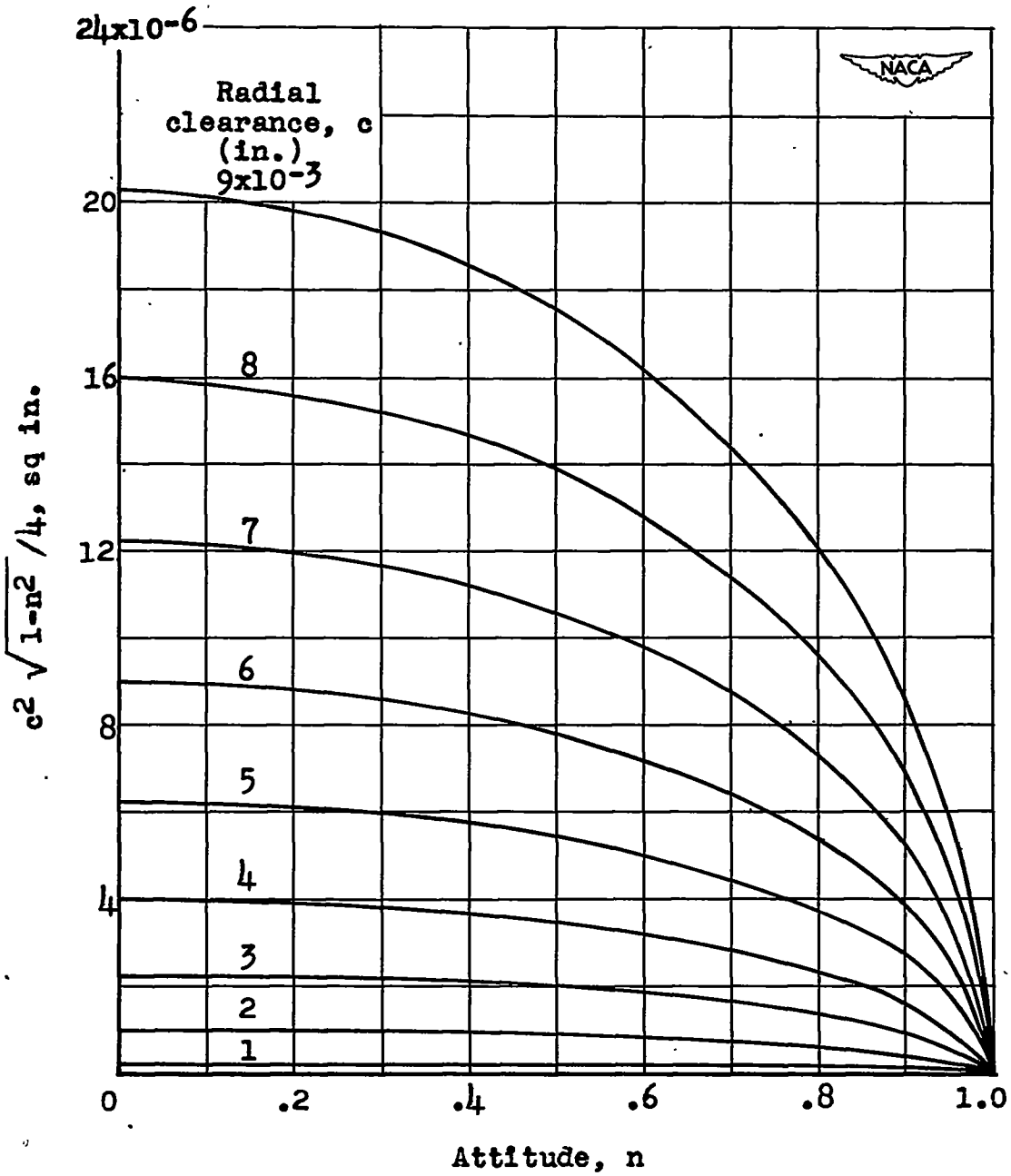

Figure 7. - Variation of $c^2\sqrt{1-n^2}/4$ with attitude for various values of radial clearance.

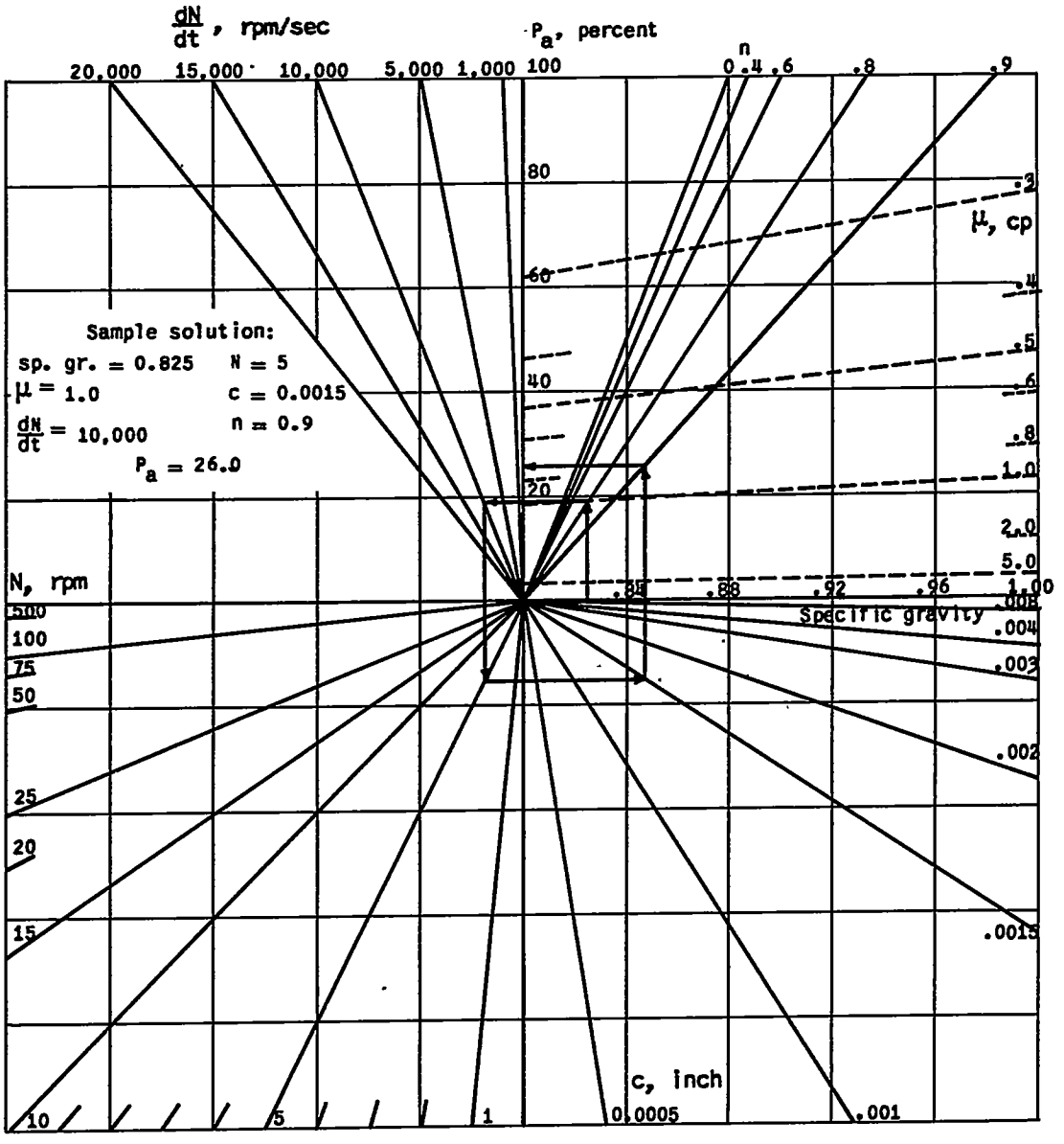

(a) Low rotative speed range.

Figure 8. - Determination of percentage change in load capacity of journal bearing due to acceleration.

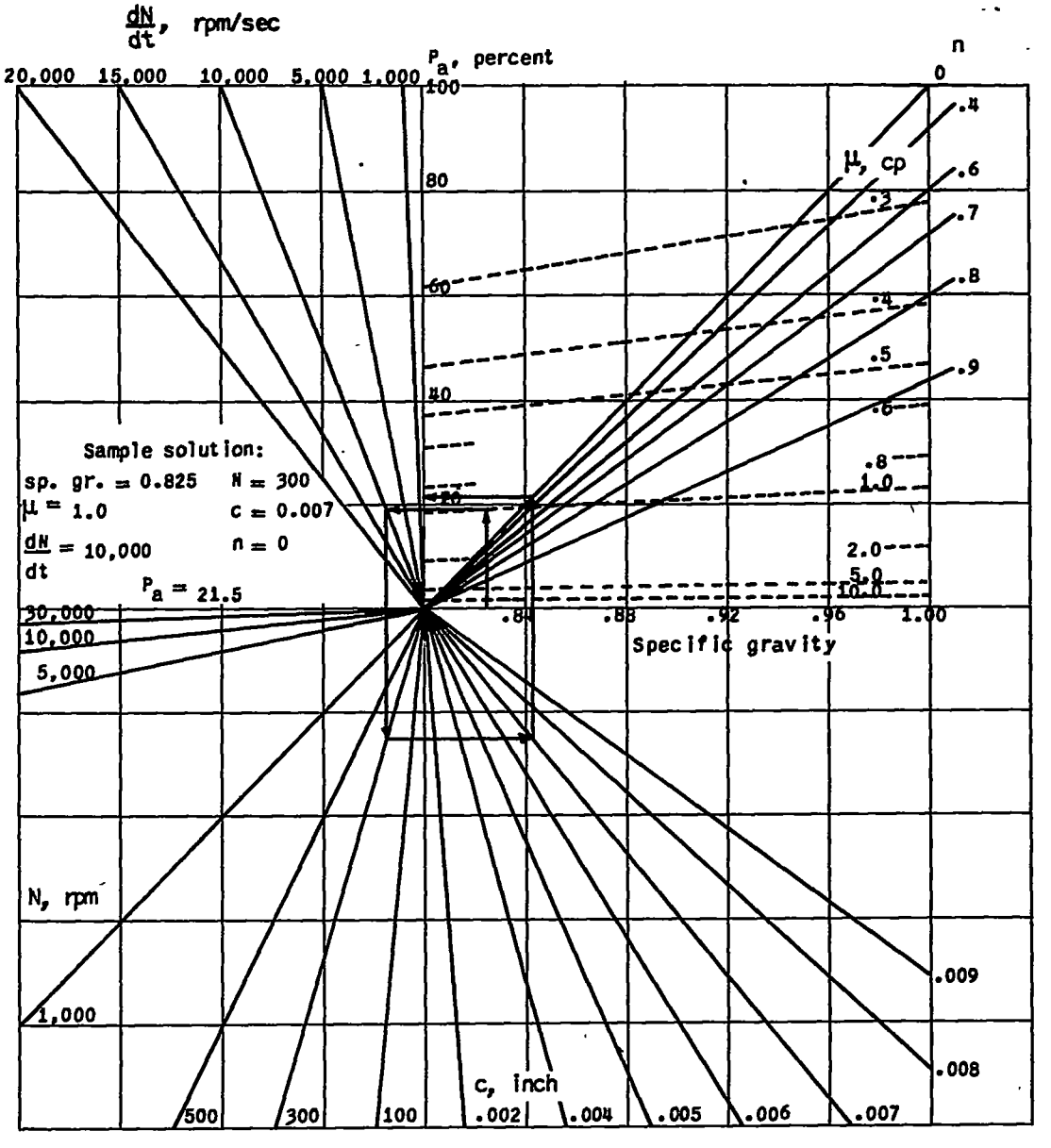

(b) High rotative speed range.

Figure 8. - Concluded. Determination of percentage change in load capacity of journal bearing due to acceleration.

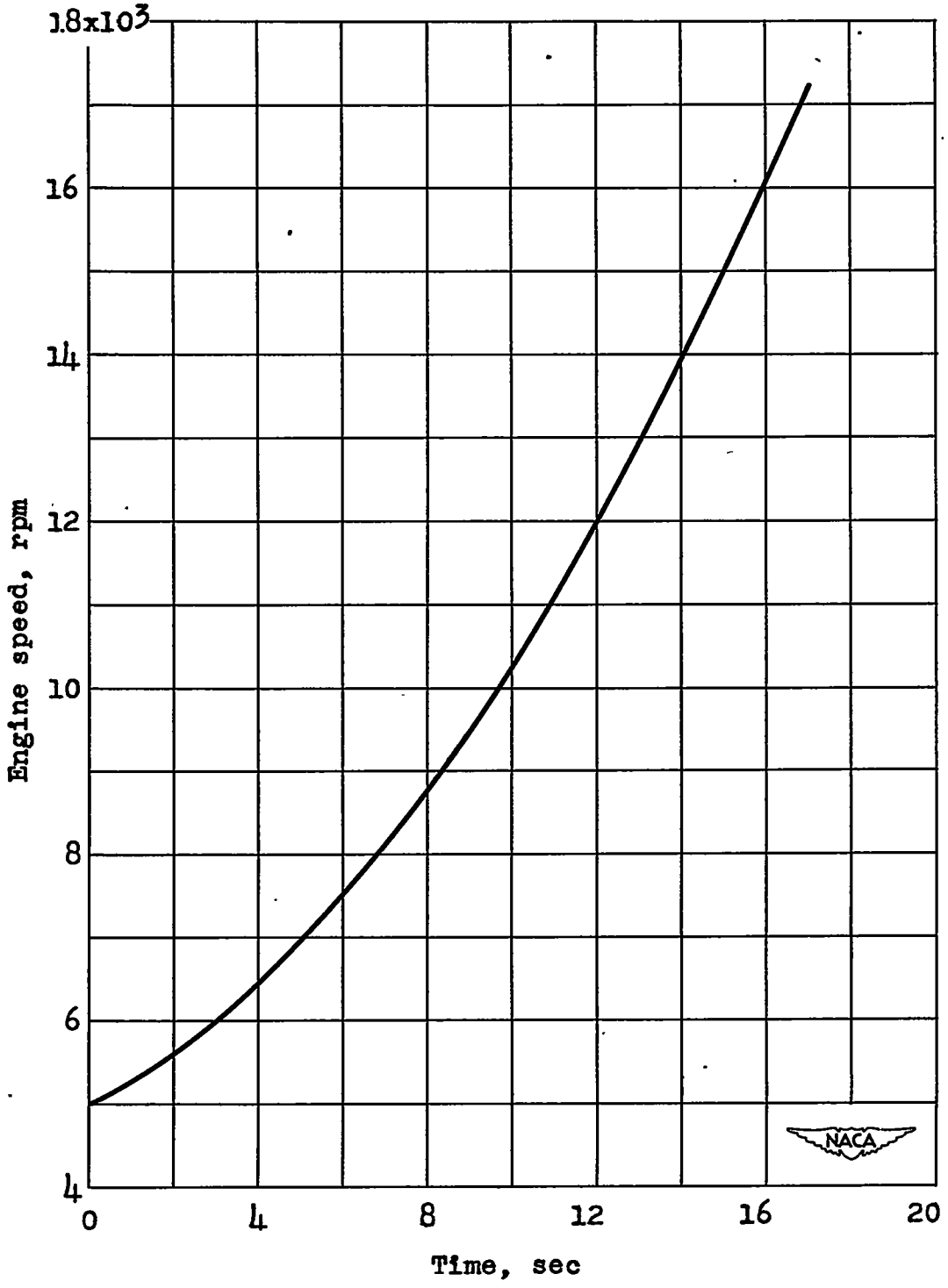

Figure 9. - Acceleration test of typical turbojet engine. Altitude, 10,000 feet; tunnel temperature, 22° F; tunnel velocity, 300 miles per hour.