TECH LIBRARY KAFB, NM
0144959

NACA TN No. 1736

8184

NATIONAL ADVISORY COMMITTEE FOR AERONAUTICS

TECHNICAL NOTE

No. 1736

THEORETICAL METHOD FOR SOLUTION OF AERODYNAMIC FORCES ON THIN WINGS IN NONUNIFORM SUPERSONIC STREAM WITH AN APPLICATION TO TAIL SURFACES

By Harold Mirels

Lewis Flight Propulsion Laboratory
Cleveland, Ohio

Washington
November 1948

AFMDC
TECHNICAL LIBRARY
AFL 2811

319.98/41

TECH LIBRARY KAFB, NM

0144959

NATIONAL ADVISORY COMMITTEE FOR AERONAUTICS

TECHNICAL NOTE No. 1736

THEORETICAL METHOD FOR SOLUTION OF AERODYNAMIC FORCES ON THIN WINGS IN NONUNIFORM SUPERSONIC STREAM WITH AN APPLICATION TO TAIL SURFACES

By Harold Mirels

SUMMARY

A theoretical method for obtaining the aerodynamic forces acting on a thin wing in an irrotational nonuniform supersonic stream is presented. The method, based on linearized theory, consists of a three-component superposition. The lift and the moments induced by the nonuniformity depend only on the wing plan-form boundary and on the vertical perturbation velocity of the free stream at each point of the plan-form area. Expressions are provided that permit lift and moment solutions for arbitrary plan forms and velocity distributions.

The method is applied to determine lift and moments acting on a rectangular tail surface due to a spanwise parabolic distribution of upwash. Lift and moments due to a linear upwash distribution are also evaluated.

INTRODUCTION

The problem of determining the flow about bodies in supersonic flight is currently receiving considerable attention. Most of the solutions already obtained involve thin bodies in uniform free streams. In some cases, such as a tail surface behind a supersonic wing or a body in an imperfect supersonic tunnel, a nonuniform free stream exists and a somewhat different viewpoint from that for a uniform stream must be taken. If the velocity field is assumed irrotational and to consist of a uniform free stream plus small perturbation velocities, however, the linearized equation for the flow of a nonviscous compressible fluid is applicable and the method of solution follows from that for thin bodies in a uniform stream.

The essentials involved in the linearized solution for a thin wing in a nonuniform supersonic stream are indicated herein. The solution is presented as a superposition of component potentials, each of which can be evaluated by the methods of references 1 to 9.

The contribution of each potential to the aerodynamic coefficients is shown. Several generalizations based on references 5 and 6, concerning the nature of the upwash in the vicinity of a tail surface, are presented and a calculation is made of the lift and the moments acting on a rectangular tail surface due to parabolic and linear upwash distributions. The investigation was conducted at the NACA Cleveland laboratory and was completed during March 1948.

SYMBOLS

The following symbols are used:

A plan-form area

b span

C_D drag coefficient, $\frac{D}{\frac{1}{2}\rho U^2 A}$

C_L lift coefficient, $\frac{L}{\frac{1}{2}\rho U^2 A}$

C_l rolling-moment coefficient, $\frac{R}{\frac{1}{2}\rho U^2 bA}$

C_m pitching-moment coefficient, $\frac{P}{\frac{1}{2}\rho U^2 cA}$

C_p local pressure coefficient, $\frac{\text{incremental pressure}}{\frac{1}{2}\rho U^2}$

c chord

D drag

d,e,f points of intersection of forward Mach lines with plan form edge

L lift

M free-stream Mach number

P pitching moment about leading edge

q source strength

1007

R	rolling moment about midspan
S	forward Mach cone area of integration
t	aspect-ratio parameter, $\frac{c}{b\beta}$
U	uniform free-stream velocity, taken in positive x direction
u	perturbation-velocity in x direction
v	perturbation-velocity in y direction
v_x	stream velocity in x direction
v_y	stream velocity in y direction
v_z	stream velocity in z direction
w	perturbation velocity in z direction (upwash)
w_n	upwash at midpoint of leading edge
w_t	upwash at wing tip
x, ξ	Cartesian coordinate system
y, η	Cartesian coordinate system
z	Cartesian coordinate system
α	angle of attack
β	cotangent of Mach angle, $\sqrt{M^2-1}$
λ	local slope of streamlines measured in planes of y = constant
ρ	free-stream density
σ	local wing slope measured in planes of y = constant
φ	perturbation-velocity potential
Ω_η	rate of change of upwash in η direction, $\frac{\partial w'}{\partial \eta}$
Ω_ξ	rate of change of upwash in ξ direction, $\frac{\partial w'}{\partial \xi}$

Subscripts:

B bottom surface of reference (z=0) plane

T top surface of reference (z=0) plane

1 subdivision of forward Mach cone area

Superscripts:

' associated with nonuniform free stream; wing assumed to be absent

'' associated with cancellation of free-stream vertical perturbation velocity over plan-form region of wing

''' associated with solution for wing in uniform free stream U

ANALYSIS

Superposition Principle for Thin Wings in Nonuniform Supersonic Flow

The assumption that an irrotational flow field consists of a uniform free-stream velocity U plus small perturbation velocities

$$\left.\begin{aligned} v_x &= U+u = U+\frac{\partial\varphi}{\partial x} \\ v_y &= v = \frac{\partial\varphi}{\partial y} \\ v_z &= w = \frac{\partial\varphi}{\partial z} \end{aligned}\right\} \tag{1}$$

permits the linearization of the partial differential equation describing the flow of a nonviscous compressible fluid. The result is the familiar Prandtl-Glauert equation

$$(1 - M^2)\frac{\partial^2\varphi}{\partial x^2} + \frac{\partial^2\varphi}{\partial y^2} + \frac{\partial^2\varphi}{\partial z^2} = 0 \tag{2}$$

Because of the linearity of equation (2), the superposition of individual solutions for φ yields additional solutions. Relatively simple perturbation fields can thus be superposed to create a complex flow field satisfying equation (2).

1007

1007

The boundary conditions for flow about a thin wing are generally specified in the $z = 0$ plane. This plane contains the wing at zero angle of attack with respect to U. The top and bottom surfaces of the $z = 0$ plane are independently considered and in each the flow is so defined as to be tangent to the corresponding wing surface and to conform in every manner with a physically possible situation. (See, for example, references 1 to 3.) Local streamline slopes measured in planes of y = constant can be expressed within the accuracy of the linearized theory as $\lambda = w/U$. The vertical-perturbation-velocity distribution that will satisfy the tangent-flow condition is then $w = \sigma U$. The manner by which the boundary conditions are satisfied suggests the following three-component superposition for obtaining the potential solution of a thin wing, at angle of attack, in a nonuniform supersonic stream:

1. The perturbation-velocity potential φ' of the nonuniform stream when the wing is assumed to be absent

2. The potential φ'' arising out of a cancellation of w', the vertical perturbation velocity of the nonuniform stream, at each point of the wing plan-form area, (that is, $w'' = -w'$ for all points in the $z = 0$ plane within the wing-plan-form area)

3. The potential φ''' representing the solution for the wing at the given angle of attack in a uniform free stream of magnitude U

If the vertical perturbation velocities associated with each solution are considered, the three-component superposition is seen to provide for streamlines that are tangent to the wing. With the appropriate solution for each component potential, all required boundary conditions can be met. The superposition for the case of a tail surface is illustrated in figure 1. The shaded region S designates the area of integration when a source or doublet distribution (references 1 to 5) is used to evaluate the component potentials.

Expressions for Drag, Lift, and Moment Coefficients

The potential at points on the top and bottom surfaces of the $z = 0$ plane is

$$\varphi_T = \varphi_T' + \varphi_T'' + \varphi_T''' \tag{3}$$

$$\varphi_B = \varphi_B' + \varphi_B'' + \varphi_B''' \tag{3a}$$

and the linearized local pressure coefficients are then

$$C_{p,T} = -\frac{2}{U}\frac{\partial\varphi_T}{\partial x} = \frac{-2}{U}\left(\frac{\partial\varphi_T'}{\partial x} + \frac{\partial\varphi_T''}{\partial x} + \frac{\partial\varphi_T'''}{\partial x}\right) \tag{4}$$

1007

$$C_{p,B} = -\frac{2}{U}\frac{\partial\varphi_B}{\partial x} = \frac{-2}{U}\left(\frac{\partial\varphi_B'}{\partial x} + \frac{\partial\varphi_B''}{\partial x} + \frac{\partial\varphi_B'''}{\partial x}\right) \tag{4a}$$

The wing drag coefficient is found from an integration of the effective drag force acting on each element of area. If σ_T and σ_B represent the local wing slopes, the drag coefficient is

$$C_D = \frac{1}{A}\iint_A (C_{p,B}\,\sigma_B + C_{p,T}\,\sigma_T)\,dxdy \tag{5}$$

where the integration is conducted over the entire wing plan-form area A. The value of σ is positive when the surface normal, projecting into the stream, has a component in the negative x direction.

The solution for lift coefficient depends on the difference in pressure coefficient for the top and bottom surfaces and can be expressed, within the accuracy of linearized theory, as

$$C_L = \frac{1}{A}\iint_A (C_{p,B} - C_{p,T})\,dxdy \tag{6}$$

From equations (4) and (4a)

$$(C_{p,B}-C_{p,T}) = \frac{-2}{U}\left[\left(\frac{\partial\varphi_B'}{\partial x} - \frac{\partial\varphi_T'}{\partial x}\right) + \left(\frac{\partial\varphi_B''}{\partial x} - \frac{\partial\varphi_T''}{\partial x}\right) + \left(\frac{\partial\varphi_B'''}{\partial x} - \frac{\partial\varphi_T'''}{\partial x}\right)\right] \tag{7}$$

However, $\frac{\partial\varphi_B'}{\partial x}$ must equal $\frac{\partial\varphi_T'}{\partial x}$ because in the absence of the wing no mechanism is present to generate or sustain the lift associated with a discontinuity in $\frac{\partial\varphi'}{\partial x}$. Equation (7) then reduces to

$$(C_{p,B} - C_{p,T}) = (C_{p,B}'' - C_{p,T}'') + (C_{p,B}''' - C_{p,T}''')$$

and the expression for lift coefficient becomes

$$C_L = \frac{1}{A}\iint_A (C_{p,B}'' - C_{p,T}'')\ dxdy + \frac{1}{A}\iint_A (C_{p,B}''' - C_{p,T}''')\ dxdy \tag{8}$$

Similarly, the coefficients for rolling and pitching moments about the midspan $\left(y = -\frac{b}{2}\right)$ and leading edge $(x = 0)$ are, respectively,

$$C_l = \frac{1}{bA}\iint_A (C_{p,B}'' - C_{p,T}'')\left(y + \frac{b}{2}\right)dxdy + \frac{1}{bA}\iint_A (C_{p,B}''' - C_{p,T}''')\left(y + \frac{b}{2}\right)dxdy \tag{9}$$

and

$$C_m = \frac{1}{cA}\iint_A (C_{p,B}'' - C_{p,T}'')\ xdxdy + \frac{1}{cA}\iint_A (C_{p,B}''' - C_{p,T}''')\ xdxdy \tag{10}$$

Methods of Solution for Superposition Components

Nonuniform free stream, φ'. - When the nonuniformity of a supersonic stream is due to a thin upstream body, analytical determination of φ' may be possible. For upstream bodies that are extremely thin in one dimension (lifting surfaces), the methods of references 1 to 6 are applicable. Thin bodies of revolution require a solution of the type presented in references 7 and 8. When an analytical solution is tedious or impossible, the nonuniform flow field may be experimentally established.

Upwash cancellation, φ''. - The streamline slopes in the absence of the wing are

$$\lambda_T' = \frac{w'}{U}$$

$$\lambda_B' = \frac{-w'}{U}$$

where the sign convention for λ is the same as that used for σ in equation (5). The distribution to cancel these slopes over the wing plan-form area is then

$$\lambda_T'' = -\frac{w'}{U}$$

$$\lambda_B'' = \frac{w'}{U}$$

The cancellation can be conveniently accomplished by means of a surface distribution of sources. As shown in reference 1, the only source capable of influencing the slope at a point on the $z = 0$ plane is the local source, and the relation between local source strength and slope is given by $q = \frac{\lambda U}{\pi}$. Thus, the source distribution required to cancel the vertical perturbation velocity of the free stream is

$$q_T'' = \frac{\lambda_T'' U}{\pi} = -\frac{w'}{\pi} \tag{11}$$

and

$$q_B'' = \frac{\lambda_B'' U}{\pi} = \frac{w'}{\pi}$$

These sources are equivalent to a lifting surface and induce perturbation velocities at all points within their influence. If wing pressure coefficients are desired, however, the entire φ'' flow field need not be defined. Expressions are given in references 3 and 9 that relate the pressure coefficient at a point on a wing to the plan-form boundary and the source distribution over the plan-form area. They are directly applicable for wings having at least a part of the plan-form leading edge supersonic. (A plan-form edge is supersonic or subsonic as the component of the free-stream velocity normal to the edge is supersonic or subsonic, respectively.) The expressions fall into three classes, depending on the combination of plan-form edges influencing the point. Upon substitution of equation (11) the expressions presented in references 3 and 9 become, for points influenced by a supersonic leading edge,

$$C_{p,T}'' = \frac{-2}{\pi U}\int_d^e \frac{w'd\eta}{\sqrt{(x-\xi)^2-\beta^2(y-\eta)^2}} - \frac{2}{\pi U}\iint_S \frac{\left(\frac{\partial w'}{\partial \xi}\right)d\xi\, d\eta}{\sqrt{(x-\xi)^2-\beta^2(y-\eta)^2}} \tag{12}$$

For points influenced by a supersonic and a subsonic leading edge,

$$C_{p,T}'' = \frac{-2}{\pi U}\int_d^e \frac{w'd\eta}{\sqrt{(x-\xi)^2-\beta^2(y-\eta)^2}} - \frac{2}{\pi U}\iint_{S_1} \frac{\left(\frac{\partial w'}{\partial \xi}\right) d\xi\, d\eta}{\sqrt{(x-\xi)^2-\beta^2(y-\eta)^2}}$$

$$- \frac{4}{\pi U}\frac{\beta\left(\frac{dy}{dx}\right)_f}{1+\beta\left(\frac{dy}{dx}\right)_f}\int_e^f \frac{w'd\eta}{\sqrt{(x-\xi)^2-\beta^2(y-\eta)^2}} \tag{13}$$

For points influenced by a supersonic and a subsonic leading edge and a subsonic trailing edge,

$$C_{p,T}'' = \frac{-2}{\pi U}\int_d^e \frac{w'd\eta}{\sqrt{(x-\xi)^2-\beta^2(y-\eta)^2}} - \frac{2}{\pi U}\iint_{S_1} \frac{\left(\frac{\partial w'}{\partial \xi}\right) d\xi\, d\eta}{\sqrt{(x-\xi)^2-\beta^2(y-\eta)^2}} \tag{14}$$

The coordinate system and the limits of integration are illustrated in figure 2. The term $\left(\frac{dy}{dx}\right)_f$ is the slope of the plan-form edge evaluated at the point of intersection with the right forward Mach line from (x,y). Equation (14) assumes that the Kutta condition applies at the trailing edge. Because the slope distribution is antisymmetric about the $z=0$ plane, $C_{p,T}'' = -C_{p,B}''$ and the solution for only one surface is required. Superposition of half-infinite span wings, as in reference 6, may be used to find the pressure coefficient for points influenced by more than a single subsonic leading and trailing edge.

When the body causing the disturbed flow field and the wing whose solution is desired are sufficiently close to permit mutual interactions, the complete solution associated with the cancellation potential φ'' may require several superpositions. Three possible relations will be discussed in conjunction with figure 3. For convenience, the disturbing body is shown as a surface in the plane of the wing. In figure 3(a) the disturbing surface does not interact with the wing, and a single source distribution over the wing plan form, canceling the upwash induced by the upstream disturbance, is sufficient. In figure 3(b) both the cancellation of the upwash in the region of the wing and the free-stream

solution for the wing induce vertical perturbation velocities over the the disturbing surface region DS. In order to satisfy the boundary conditions for flow about the disturbing surface, a source distribution canceling this upwash is required. These sources contribute an additional potential to all points within their influence (shaded area in fig. 3(b)). No part of the wing projects into this region and the wing is uninfluenced by the additional potentials. In figure 3(c), however, this cancellation of upwash over region DS contributes to the potential at wing region W. Also, a source distribution is required to cancel the additional upwash at W. Thus, with interaction between the wing and a neighboring body, as in figure 3(c), the cancellation potential associated with the solution for the wing is composed of several superpositions.

Uniform free-stream solution, φ'''. - References 1 to 4 may be used to determine φ'''. A large variety of methods and solutions are available and further discussion is unwarranted.

Requirements For Lift and Moment Solutions

Each lift and moment coefficient expressed in equations (8) to (10) consists of two members. The second member in each equation corresponds to the solution for the wing in a uniform free stream. The first member can therefore be considered as the correction for nonuniformity of the free stream. The magnitude of this correction can be evaluated with the aid of equations (12) to (14). These equations depend only on the wing plan-form boundary and the local vertical perturbation velocity of the free stream w' at each point on the plan form. Thus, for those problems in which lift and moments are of primary interest, an explicit solution for φ' is unnecessary. Only a knowledge of w' at points on the wing is required.

APPLICATIONS

Lift and Moments on Tail Surfaces behind Supersonic Wings

The determination of the lift and moments acting on a tail surface requires a knowledge of the upwash distribution behind supersonic wings. Although the linearized solution for upwash is incomplete, several useful generalizations can be made. Reference 6 shows that:

1. The upwash distribution an infinite distance behind a wing depends on the spanwise load distribution. For a given load distribution, the solution is identical for both subsonic and supersonic flight and its evaluation offers no essential difficulty.

1007

2. Infinite values for upwash are indicated along lines of constant y in the plane of the trailing vortex sheet wherever a discontinuity exists in the rate of change of spanwise loading; otherwise the upwash is continuous.

From an investigation of the upwash along the center line of the trailing vortex sheet behind a triangular wing, reference 5 shows that the upwash builds up asymmetrically to its value at infinity. The upwash achieves an almost constant value within 1 chord length of the trailing edge for triangular wings of small apex angle and within 2 to 3 chord lengths for triangular wings whose apex angles approximately equal the Mach angle corresponding to the flight velocity. Although this result was derived for a special type of wing, the manner of derivation seems to indicate that the values of upwash, for points on or very near the trailing vortex sheet and a distance of several chord lengths behind the trailing edge, approximately equal the values an infinite distance downstream from these points. In reference 6 the upwash behind several types of wing tip was found to follow a similar trend for points in the vicinity of the vortex sheet.

On the basis of these indications, simplifying assumptions can be made concerning the nature of the upwash in the neighborhood of a tail surface. If the tail surface is in the immediate vicinity of the trailing vortex sheet, the upwash in the tail-surface reference plane can be considered a function of span only and the distribution can be estimated from the solution for upwash an infinite distance downstream of the wing. Setting $\frac{\partial w'}{\partial \xi} = 0$ in equations (12) to (14) causes all the area integrations to disappear and thereby reduces the mathematical labor involved in determining lift and moment solutions.

The effect of a spanwise parabolic upwash distribution on the lift and the moments acting on a tail surface of rectangular plan form is presented in the following section. This distribution appears to be a reasonable approximation for the flow in the vicinity of a tail surface. See, for example, the upwash an infinite distance behind a triangular wing as presented in reference 6. In order to illustrate the effect of a nonsymmetrical upwash distribution, the solution for upwash varying linearly in the x and y directions is also presented. Both distributions are defined in figure 4.

Rectangular plan form in parabolic upwash. - The solution for the effect of a symmetrical parabolic upwash on the lift and the moments acting upon a rectangular plan form is outlined in appendix A. The upwash distribution is expressed in the form

1007

$$w' = w_n + \frac{4}{b^2}\left(\frac{b}{2} + \eta\right)^2 (w_t - w_n)$$

where w_n is the value at $\eta = -b/2$ and w_t is the value at the tip ($\eta = 0$ or $\eta = -b$). The lift and pitching-moment coefficients due to the upwash are shown to be

$$C_L'' = \frac{4}{\beta}\left[\frac{w_n}{U}\left(1 - \frac{t}{2}\right) + \frac{(w_t - w_n)}{U}\left(\frac{1}{3} - \frac{t}{2} + \frac{t^2}{2} - \frac{5}{24}t^3\right)\right] \tag{15}$$

and

$$C_m'' = \frac{4}{\beta}\left[\frac{w_n}{U}\left(\frac{1}{2} - \frac{t}{3}\right) + \frac{(w_t - w_n)}{U}\left(\frac{1}{6} - \frac{t}{3} + \frac{3}{8}t^2 - \frac{t^3}{6}\right)\right] \tag{16}$$

The aspect ratios for which these equations are applicable are restricted by $0 \leqq t \leqq \frac{1}{2}$, where $t = \frac{c}{b\beta}$.

As would be expected, the terms in equations (15) and (16) associated with w_n/U are equivalent to the solution for a flat plate at angle of attack $\alpha = w_n/U$ and the effect of a uniform upwash field on a tail surface is to increase the effective angle of attack.

The terms associated with $(w_t - w_n)/U$ represent the effect of the spanwise parabolic variation in upwash (fig. 5). Owing to the tip effect, the lift and moment coefficients decrease with increasing t. For $t = 0$ (infinite aspect ratio), the lift and moment coefficients equal those obtained for a flat plate in uniform flow at angle of attack $\alpha = \frac{1}{3}\frac{w_t - w_n}{U}$. With increasing t the equivalent angle of attack (for a flat plate of aspect ratio t to have the same lift and moments as those induced by the parabolic upwash) becomes a smaller fraction of $(w_t - w_n)/U$ and for $t = 1/2$ is of the order $\alpha = 0.23\,\frac{w_t - w_n}{U}$.

Rectangular plan form in linear upwash field. - The expression for upwash varying linearly in both the ξ and η directions is given in appendix B as

1007

$$w' = w_n + \Omega_\eta \left(\frac{b}{2} + \eta\right) + \Omega_\xi \xi$$

where w_n is the upwash at $(0, -b/2)$, Ω_η is the rate of change of upwash in the η direction $\left(\Omega_\eta = \frac{\partial w'}{\partial \eta}\right)$, and Ω_ξ is the rate of change in the ξ direction $\left(\Omega_\xi = \frac{\partial w'}{\partial \xi}\right)$. The solution for the lift and the moments induced on a rectangular plan form due to this upwash distribution is shown to be

$$C_L'' = \frac{4}{\beta}\left[\frac{w_n}{U}\left(1 - \frac{t}{2}\right) + \frac{\Omega_\xi c}{U}\left(\frac{1}{2} - \frac{t}{6}\right)\right] \tag{17}$$

$$C_m'' = \frac{4}{\beta}\left[\frac{w_n}{U}\left(\frac{1}{2} - \frac{t}{3}\right) + \frac{\Omega_\xi c}{U}\left(\frac{1}{3} - \frac{t}{8}\right)\right] \tag{18}$$

$$C_l'' = \frac{4}{\beta}\frac{\Omega_\eta b}{U}\left(\frac{1}{12} - \frac{t}{8} + \frac{t^2}{24} + \frac{t^3}{96}\right)$$

for aspect ratios that satisfy $0 \leqq t \leqq \frac{1}{2}$.

Again the terms in equations (17) and (18) associated with w_n are equivalent to the solution for a flat plate at angle of attack $\alpha = w_n/U$. The presence of the term $\Omega_\eta \left(\frac{b}{2} + \eta\right)$ in the upwash distribution results in a rolling moment. This moment is identical with that induced by steady roll about the midspan at the rate Ω_η radians per second because the local upwash defined by Ω_η is exactly equal to that used for the solution of a wing in steady roll. (See reference 9.) Similarly, the terms associated with Ω_ξ result in lift and pitching moments equal to those induced by steady pitching about the leading edge at the rate Ω_ξ radians per second. Thus solutions for a wing in steady roll and pitch can be utilized to evaluate readily the effect of linear upwash distributions.

Corrections for Supersonic Tunnels

If the local variations in Mach number and stream angularity in the test section of an imperfect supersonic tunnel are sufficiently small, the three-component superposition can be used in principle as a basis for reducing tunnel data to the values that would be obtained in a uniform free stream. The corrected value

for pressure coefficient at points on the top surface of a thin wing is obtained by subtracting $(C_{p,T}' + C_{p,T}'')$ from the observed value. The term $C_{p,T}'$ is determined from a pressure survey and $C_{p,T}''$ from equation (12), (13), or (14).

1007

SUMMARY OF ANALYSIS

The linearized solution for the aerodynamic forces acting on a thin wing in a nonuniform supersonic stream is presented as a three-component superposition. The effect of free-stream nonuniformity on the lift and moment forces depends only on the wing plan-form boundary and on the vertical perturbation velocity of the free stream at each point of the plan form. Expressions have been provided that permit the lift and moment solution for arbitrary plan forms and velocity distributions.

Lewis Flight Propulsion Laboratory,
National Advisory Committee for Aeronautics,
Cleveland, Ohio, July 30, 1948.

APPENDIX A

RECTANGULAR PLAN FORM IN PARABOLIC UPWASH

Upwash distribution. - The parabolic upwash distribution is illustrated in figure 4(a):

$$w' = w_n + \frac{4}{b^2}\left(\frac{b}{2} + \eta\right)^2 (w_t - w_n)$$

Pressure coefficients. - The region influenced by the wing tip is designated region I and the remaining part of the half wing, region II (fig. 6). The aspect-ratio parameter is assumed to be in the range $0 \leqq t \leqq \frac{1}{2}$ in order that no point on the wing be influenced by more than a single tip.

Equation (14) (or equation (13) with $\left(\frac{dy}{dx}\right)_f = 0$) is applicable for determining the local pressure coefficients in region I (fig. 6(a)):

$$C_{p,T''} = \frac{-2}{\pi U}\int_d^e \frac{w'd\eta}{\sqrt{(x-\xi)^2-\beta^2(y-\eta)^2}} - \frac{2}{\pi U}\iint_{S_1} \frac{\left(\frac{\partial w'}{\partial \xi}\right) d\xi d\eta}{\sqrt{(x-\xi)^2-\beta^2(y-\eta)^2}}$$

$$= \frac{-2}{\pi U}\int_{y-\frac{x}{\beta}}^{-y-\frac{x}{\beta}} \frac{\left[w_n + \frac{4}{b^2}\left(\frac{b}{2} + \eta\right)^2 (w_t - w_n)\right] d\eta}{\sqrt{x^2-\beta^2(y-\eta)^2}}$$

$$= \frac{-2}{\pi\beta}\left[\frac{w_n}{U}\cos^{-1}\left(\frac{2\beta y}{x}+1\right) + \frac{4}{b^2}\frac{(w_t-w_n)}{U}\left\{\left[\left(\frac{b}{2}+y\right)^2 + \frac{1}{2}\left(\frac{x}{\beta}\right)^2\right]\cos^{-1}\left(\frac{2\beta y}{x}+1\right)\right.\right.$$

$$\left.\left. + 2\left(\frac{x}{2\beta} - y - b\right)\sqrt{-y\left(y+\frac{x}{\beta}\right)}\right\}\right]$$

Equation (12) is applicable to region II (fig. 6(b)):

$$C_{p,T}'' = \frac{-2}{\pi U}\int_d^e \frac{w'd\eta}{\sqrt{(x-\xi)^2-\beta^2(y-\eta)^2}} - \frac{2}{\pi U}\iint_S \frac{\left(\frac{\partial w'}{\partial \xi}\right) d\xi d\eta}{\sqrt{(x-\xi)^2-\beta^2(y-\eta)^2}}$$

$$= \frac{-2}{\pi U}\int_{y-\frac{x}{\beta}}^{y+\frac{x}{\beta}} \frac{\left[w_n + \frac{4}{b^2}\left(\frac{b}{2}+\eta\right)^2 (w_t-w_n)\right] d\eta}{\sqrt{x^2-\beta^2(y-\eta)^2}}$$

$$= \frac{-2}{\beta}\left\{\frac{w_n}{U} + \frac{4}{b^2}\,\frac{(w_t-w_n)}{U}\left[\left(\frac{b}{2}+y\right)^2 + \frac{1}{2}\left(\frac{x}{\beta}\right)^2\right]\right\}$$

The pressure coefficients are symmetric about the $y = -b/2$ plane and antisymmetric about the $x = 0$ plane.

<u>Lift coefficient.</u> - The lift coefficient is

$$C_L'' = \frac{1}{bc}\int_0^c dx \int_{-b}^0 (-2C_{p,T}'')\, dy$$

$$= \frac{4}{\beta}\left[\frac{w_n}{U}\left(1-\frac{t}{2}\right) + \frac{(w_t-w_n)}{U}\left(\frac{1}{3}-\frac{t}{2}+\frac{t^2}{2}-\frac{5}{24}t^3\right)\right]$$

<u>Moment coefficient.</u> - The pitching-moment coefficient about the leading edge is

$$C_m'' = \frac{1}{bc^2}\int_0^c x dx \int_{-b}^0 (-2C_{p,T}'')\, dy$$

$$= \frac{4}{\beta}\left[\frac{w_n}{U}\left(\frac{1}{2}-\frac{t}{3}\right) + \frac{(w_t-w_n)}{U}\left(\frac{1}{6}-\frac{t}{3}+\frac{3}{8}t^2-\frac{t^3}{6}\right)\right]$$

APPENDIX B

RECTANGULAR PLAN FORM IN LINEAR UPWASH

Upwash distribution. - The linear upwash distribution is illustrated in figure 4(b).

$$w' = w_n + \Omega_\eta\left(\frac{b}{2} + \eta\right) + \Omega_\xi \xi$$

Pressure coefficients. - When $0 \leqq t \leqq \frac{1}{2}$, the local pressure coefficients in regions I and II are, for region I (fig. 6(a)),

$$C_{p,T''} = \frac{-2}{\pi U}\int_d^e \frac{w' d\eta}{\sqrt{(x-\xi)^2-\beta^2(y-\eta)^2}} - \frac{2}{\pi U}\iint_{S_1} \frac{\left(\frac{\partial w'}{\partial \xi}\right) d\xi\, d\eta}{\sqrt{(x-\xi)^2-\beta^2(y-\eta)^2}}$$

$$= \frac{-2}{\pi U}\int_{y-\frac{x}{\beta}}^{-y-\frac{x}{\beta}} \frac{\left[w_n + \Omega_\eta\left(\frac{b}{2} + \eta\right)\right] d\eta}{\sqrt{x^2-\beta^2(y-\eta)^2}}$$

$$- \frac{2}{\pi U}\int_0^{x+\beta y} d\xi \int_{y-\frac{x-\xi}{\beta}}^{-y-\frac{x-\xi}{\beta}} \frac{\Omega_\xi\, d\eta}{\sqrt{(x-\xi)^2-\beta^2(y-\eta)^2}}$$

$$- \frac{2}{\pi U}\int_{x+\beta y}^{x} d\xi \int_{y-\frac{x-\xi}{\beta}}^{y+\frac{x-\xi}{\beta}} \frac{\Omega_\xi\, d\eta}{\sqrt{(x-\xi)^2-\beta^2(y-\eta)^2}}$$

$$= \frac{-2}{\pi\beta}\left\{\frac{w_n}{U}\cos^{-1}\left(\frac{2\beta y}{x} + 1\right) + \frac{\Omega_\eta}{U}\left[\left(\frac{b}{2} + y\right)\cos^{-1}\left(\frac{2\beta y}{x} + 1\right) - 2\sqrt{-y\left(y + \frac{x}{\beta}\right)}\right]\right.$$

$$\left. + \frac{\Omega_\xi}{U}\left[2x\tan^{-1}\sqrt{\frac{-\beta y}{x + \beta y}} + 2\beta\sqrt{-y\left(y + \frac{x}{\beta}\right)}\right]\right\}$$

and, for region II (fig. 6(b)),

$$C_{p,T}'' = \frac{-2}{\pi U}\int_d^e \frac{w'd\eta}{\sqrt{(x-\xi)^2-\beta^2(y-\eta)^2}} - \frac{2}{\pi U}\iint_S \frac{\left(\frac{\partial w'}{\partial \xi}\right) d\xi\, d\eta}{\sqrt{(x-\xi)^2-\beta^2(y-\eta)^2}}$$

$$= \frac{-2}{\pi U}\int_{y-\frac{x}{\beta}}^{y+\frac{x}{\beta}} \frac{\left[w_n + \Omega_\eta\left(\frac{b}{2}+\eta\right)\right]d\eta}{\sqrt{(x^2-\beta^2(y-\eta)^2}}$$

$$- \frac{2}{\pi U}\int_0^x d\xi \int_{y-\frac{x-\xi}{\beta}}^{y+\frac{x-\xi}{\beta}} \frac{\Omega_\xi d\eta}{\sqrt{(x-\xi)^2-\beta^2(y-\eta)^2}}$$

$$= \frac{-2}{\beta}\left[\frac{w_n}{U} + \frac{\Omega_\eta}{U}\left(\frac{b}{2}+y\right) + \frac{\Omega_\xi}{U}x\right]$$

The pressure coefficients are antisymmetric about the $z = 0$ plane. The terms involving w_n/U and Ω_ξ/U are symmetric and the term involving Ω_η/U is antisymmetric about the plane $y = -b/2$.

Lift coefficient. - The lift coefficient for this upwash is

$$C_L'' = \frac{4}{\beta}\left[\frac{w_n}{U}\left(1-\frac{t}{2}\right) + \frac{\Omega_\xi c}{U}\left(\frac{1}{2}-\frac{t}{6}\right)\right]$$

Moment coefficients. - The rolling-moment coefficient about midspan is

$$C_l'' = \frac{4}{\beta}\frac{\Omega_\eta b}{U}\left(\frac{1}{12}-\frac{t}{8}+\frac{t^2}{24}+\frac{t^3}{96}\right)$$

and the pitching-moment coefficient about the leading edge is

$$C_m'' = \frac{4}{\beta}\left[\frac{w_n}{U}\left(\frac{1}{2}-\frac{t}{3}\right) + \frac{\Omega_\xi c}{U}\left(\frac{1}{3}-\frac{t}{8}\right)\right]$$

1007

REFERENCES

1. Puckett, Allen E.: Supersonic Wave Drag of Thin Airfoils. Jour. Aero. Sci., vol. 13, no. 9, Sept. 1946, pp. 475-484.

2. Evvard, John C.: Distribution of Wave Drag and Lift in the Vicinity of Wing Tips at Supersonic Speeds. NACA TN No. 1382, 1947.

3. Evvard, John C.: Theoretical Distribution of Lift on Thin Wings at Supersonic Speeds (An Extension). NACA TN No. 1585, 1948.

4. Heaslet, Max A., and Lomax, Harvard: The use of Source-Sink and Doublet Distributions Extended to the Solution of Arbitrary Boundary Value Problems in Supersonic Flow. NACA TN No. 1515, 1948.

5. Heaslet, Max A., and Lomax, Harvard: The Calculation of Downwash behind Supersonic Wings with an Application to Triangular Plan Forms. NACA TN No. 1620, 1948.

6. Lagerstrom, P. A., and Graham, Martha E.: Downwash and Sidewash Induced by Three-Dimensional Lifting Wings in Supersonic Flow. Rep. No. SM-13007, Douglas Aircraft Co., Inc., April, 1947.

7. von Kármán, Theodor, and Moore, Norton B.: Resistance of Slender Bodies Moving with Supersonic Velocities, with Special Reference to Projectiles. Trans. A.S.M.E.,vol. 54, no. 23, Dec. 15, 1932, pp. 303-310.

8. Tsien, Hsue-Shen: Supersonic Flow over an Inclined Body of Revolution. Jour. Aero. Sci., vol. 5, no. 12, Oct. 1938, pp. 480-483.

9. Moeckel, W. E., and Evvard, J. C.: Load Distributions Due to Steady Roll and Pitch for Thin Wings at Supersonic Speeds. NACA TN No. 1689, 1948.

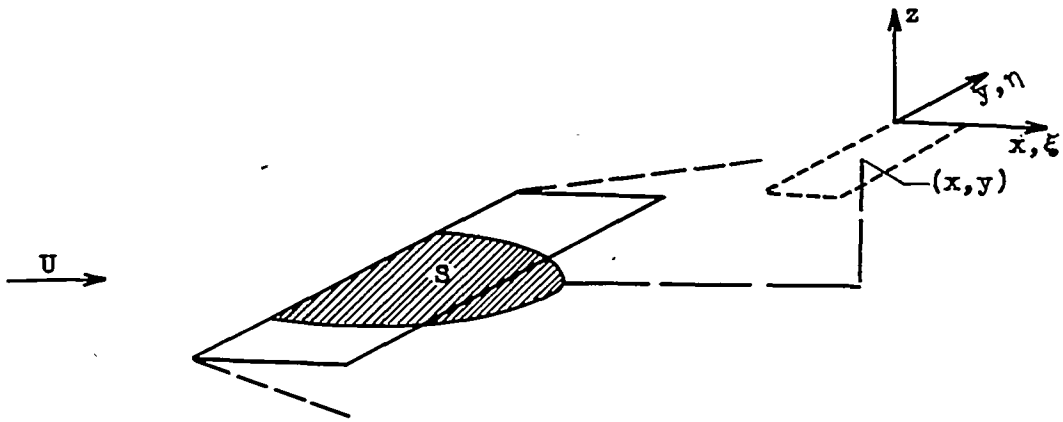

(a) Potential φ' due to upstream wing; tail surface assumed absent.

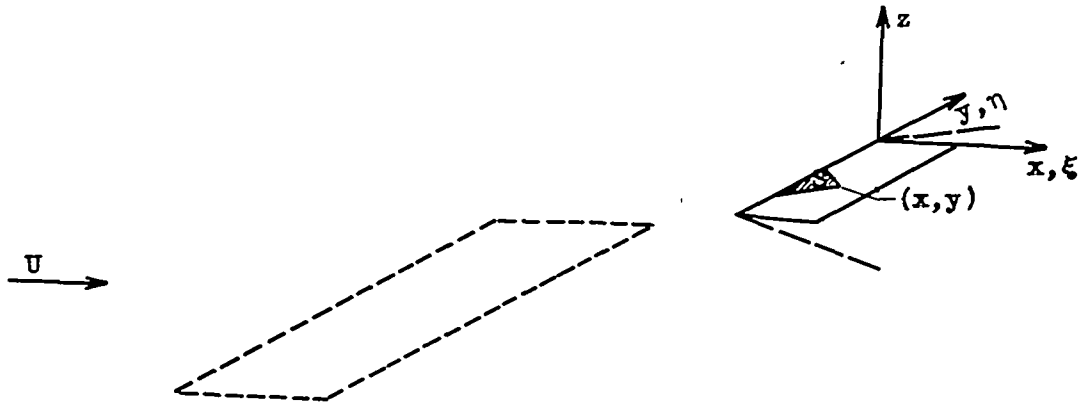

(b) Potential φ'' due to cancellation of upwash over plan-form area of tail surface.

(c) Potential φ''' due to solution for tail surface in uniform stream.

Figure 1. - Solution for tail surface behind supersonic wing by means of three-component superposition. $\varphi = \varphi' + \varphi'' + \varphi'''$.

1007

1007

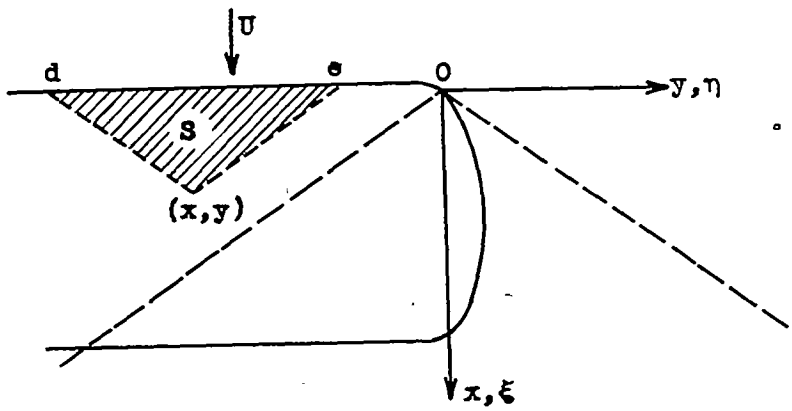

(a) Point in region influenced by supersonic leading edge.

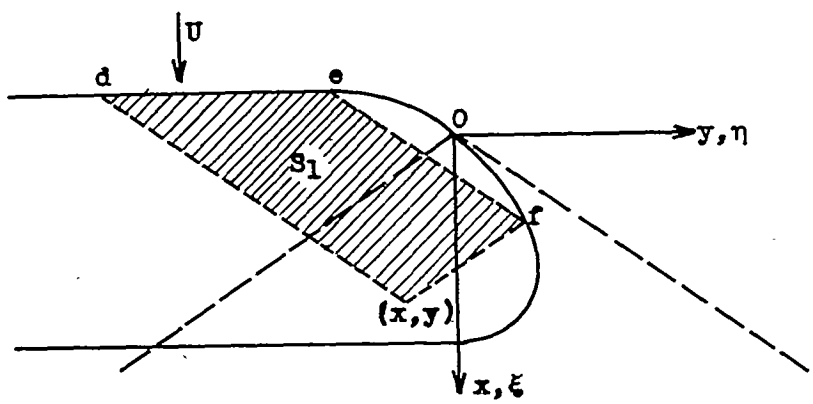

(b) Point in region influenced by supersonic and subsonic leading edges.

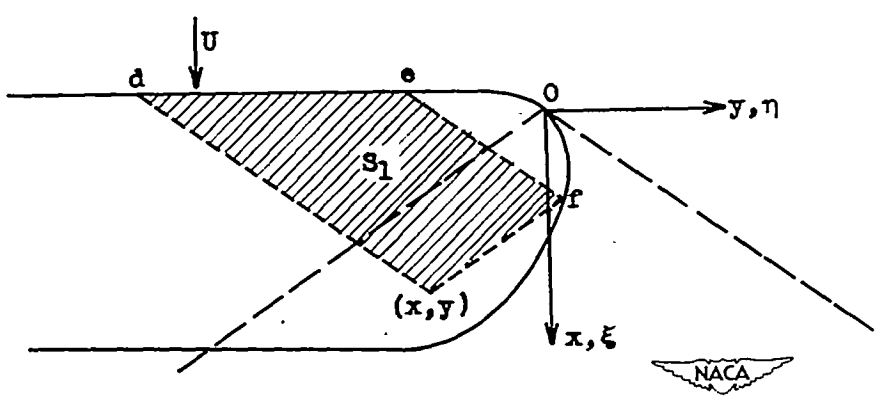

(c) Point in region influenced by supersonic and subsonic leading edges and by subsonic trailing edge.

Figure 2. - Regions of integration for obtaining pressure coefficient at points influenced by various types of plan-form edge.

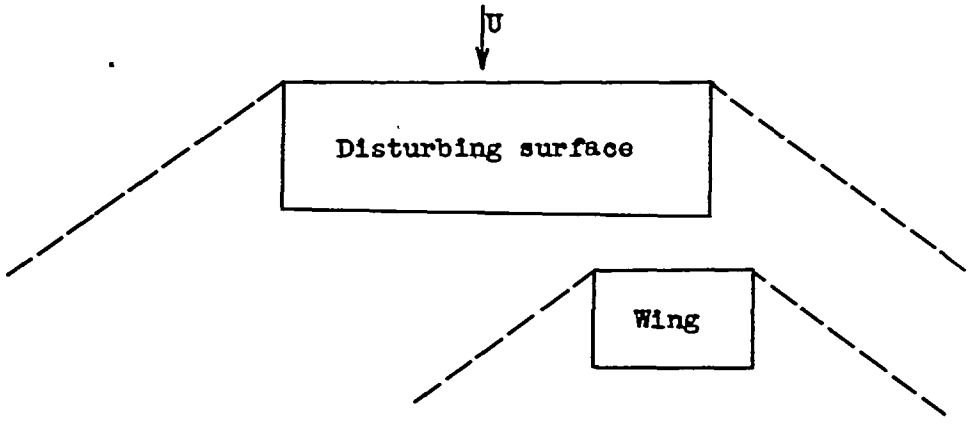

(a) Disturbing surface uninfluenced by wing.

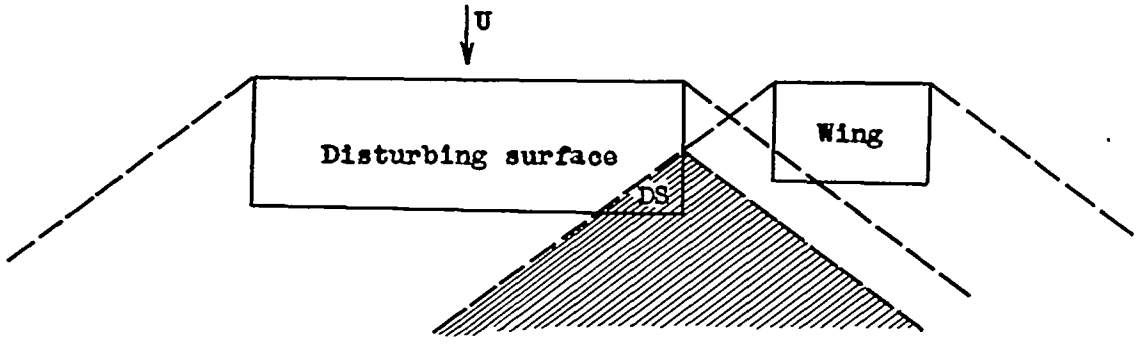

(b) Part of disturbing surface influenced by wing does not affect flow about wing.

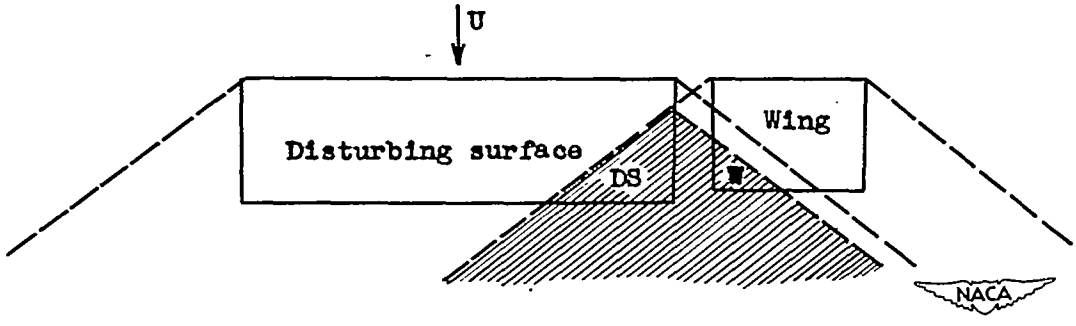

(c) Part of disturbing surface influenced by wing affects flow about wing.

Figure 3. - Possible relations between wing and neighboring surface in reference to solution for wing.

1007

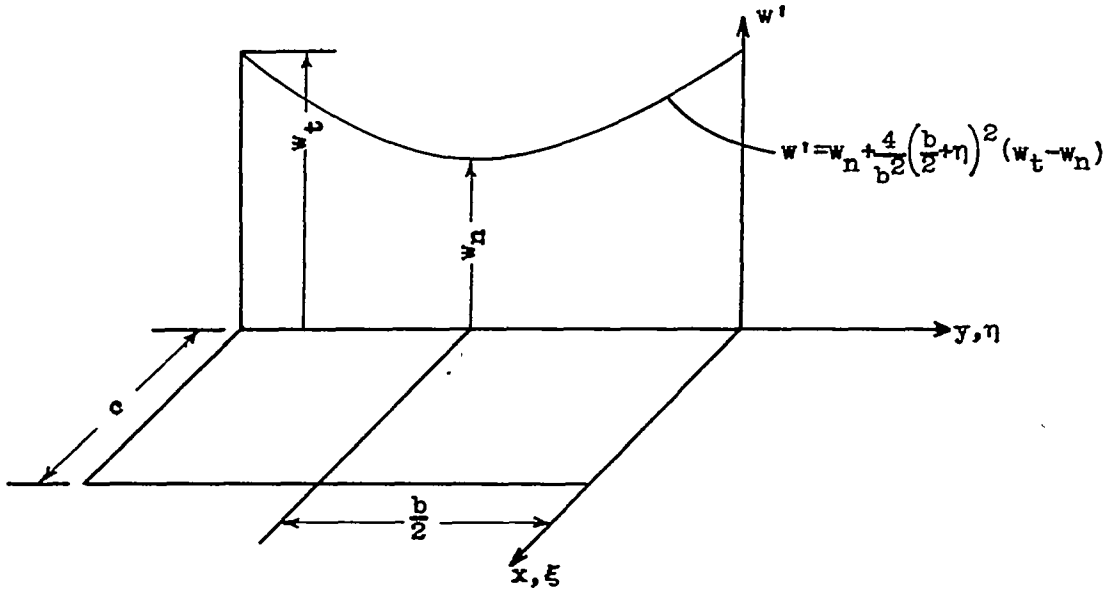

(a) Symmetrical parabolic upwash distribution.

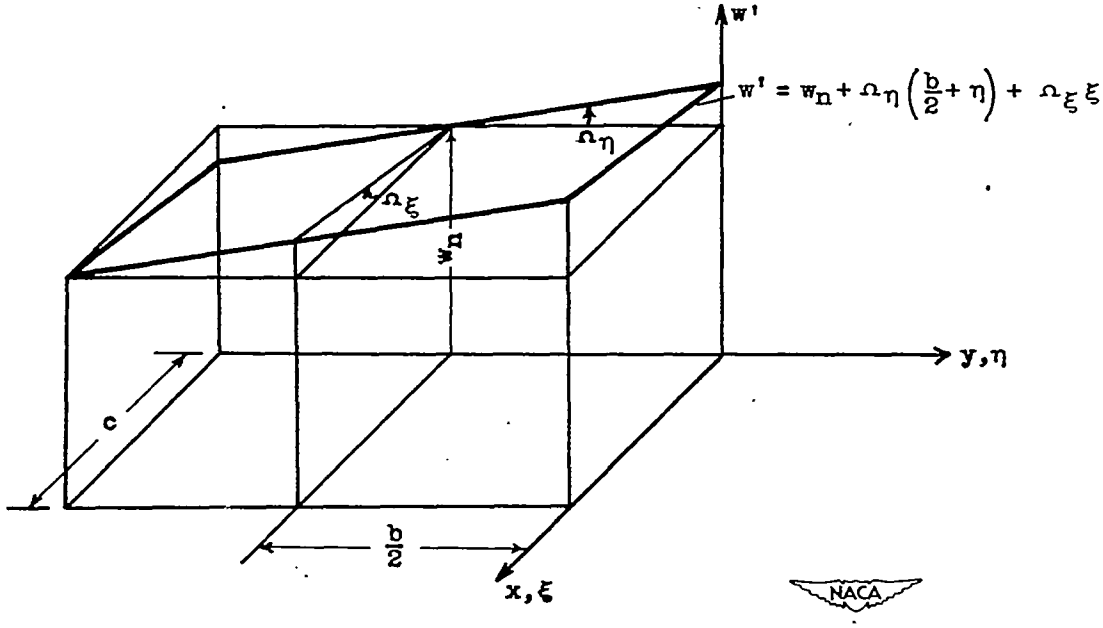

(b) Linear upwash distribution.

Figure 4. - General upwash distributions.

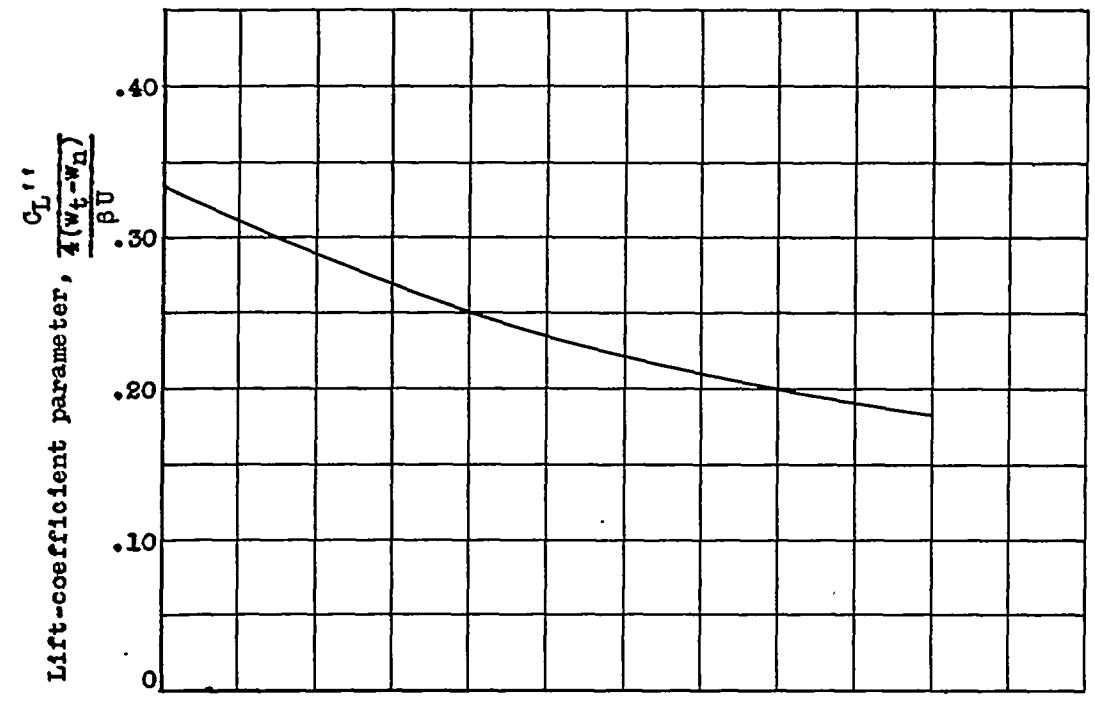

(a) Lift-coefficient parameter.

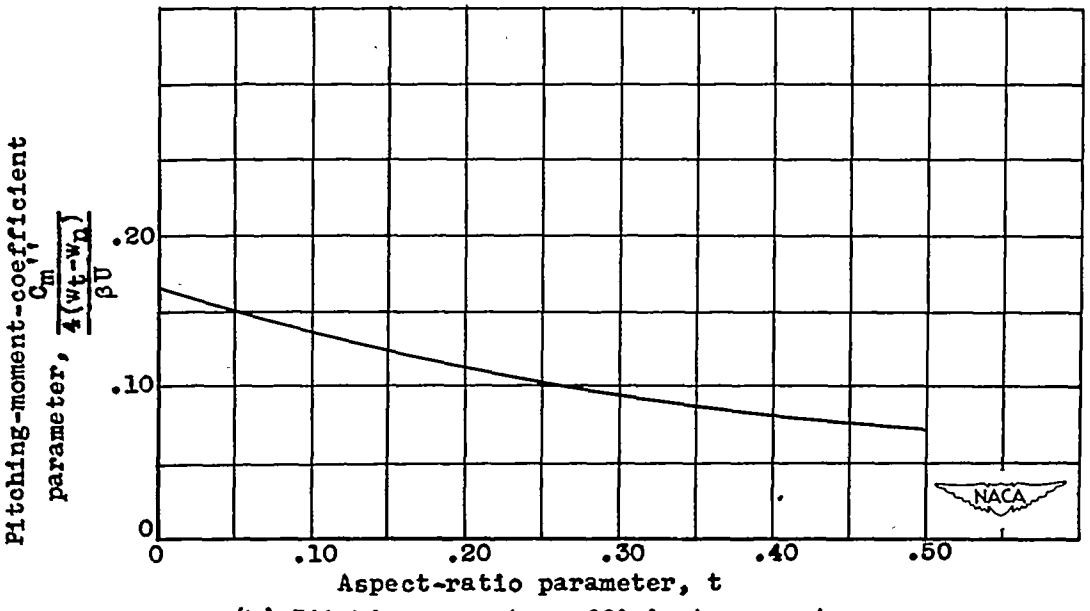

(b) Pitching-moment-coefficient parameter.

Figure 5. - Lift and moments acting on rectangular plan form due to parabolic variation in upwash. $w' = \frac{4}{b^2}\left(\frac{b}{2} + \eta\right)^2\left(w_t - w_n\right)$.

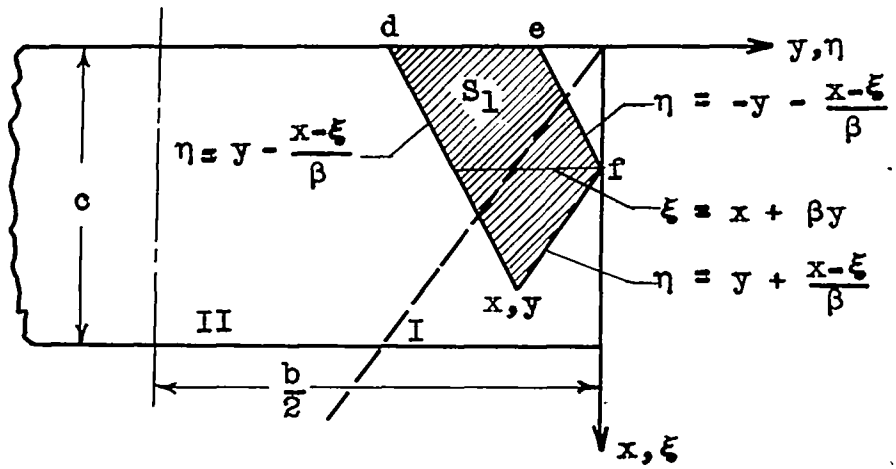

(a) Point in region I.

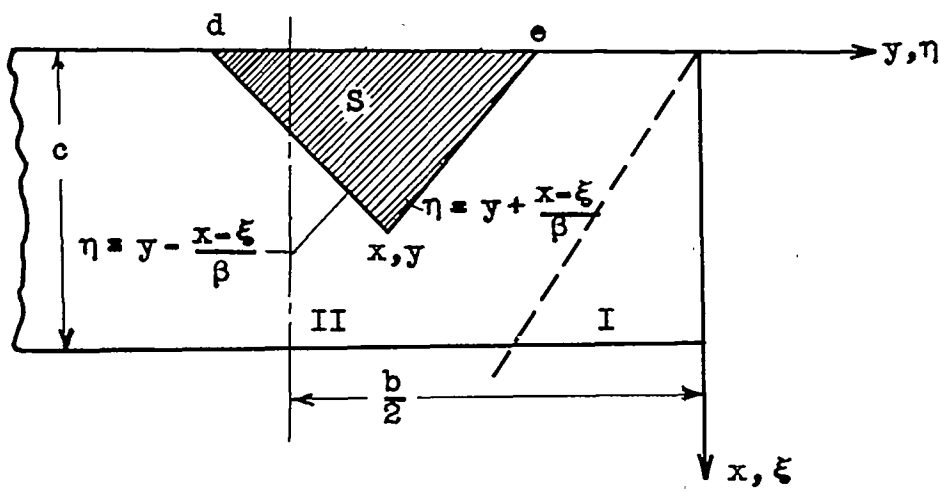

(b) Point in region II.

Figure 6. - Limits of integration for rectangular plan form. $0 \leqq t \leqq \frac{1}{2}$; $t = \frac{c}{b\beta}$.