NACA TN No. 1747

8195

TECH LIBRARY KAFB, NM
0065026

NATIONAL ADVISORY COMMITTEE FOR AERONAUTICS

TECHNICAL NOTE

No. 1747

DETERMINATION OF COUPLED AND UNCOUPLED MODES AND FREQUENCIES OF NATURAL VIBRATION OF SWEPT AND UNSWEPT WINGS FROM UNIFORM CANTILEVER MODES

By Roger A. Anderson and John C. Houbolt

Langley Aeronautical Laboratory
Langley Field, Va.

Washington
November 1948

TECH LIBRARY KAFB, NM
0065026

NATIONAL ADVISORY COMMITTEE FOR AERONAUTICS

TECHNICAL NOTE NO. 1747

DETERMINATION OF COUPLED AND UNCOUPLED MODES AND FREQUENCIES OF NATURAL VIBRATION OF SWEPT AND UNSWEPT WINGS FROM UNIFORM CANTILEVER MODES

By Roger A. Anderson and John C. Houbolt

SUMMARY

A solution is presented for the coupled and uncoupled modes and frequencies of wings (swept or unswept) mounted on a fuselage. The deflection and twist of the wing is expanded in terms of the modes of a uniform cantilever beam and the energy method is used to derive the characteristic equations describing symmetrical and antisymmetrical modes of vibrations. Application of these equations to various types of wing vibration is illustrated by numerical examples. The numerical examples chosen were susceptible to exact solution, and the results show that accurate modes and frequencies can be obtained by a method in which low-order determinants are used.

INTRODUCTION

Except for certain idealized cases, the natural vibration modes and frequencies of airplane wings (swept or unswept) cannot be found by exact analysis, and thus approximate methods of solution must be used. Such a solution is presented for the general problem of coupled bending and torsional vibration of a nonuniform wing mounted at an angle of sweep on a fuselage. The energy method is used to derive two sets of linear characteristic equations, one for symmetrical modes and the other for antisymmetrical modes. These same equations also lead to solutions for the coupled and uncoupled modes and frequencies of the unswept wing and fuselage. The equations are solved by the Crout method which permits independent calculation of any desired mode and frequency.

In this solution the deflection and twist of the wings are assumed to conform to elementary beam theory. Such an assumption may or may not lead to an analysis which is applicable to wings having low aspect ratio, especially when appreciable sweep is present, because the effects of the distortions in the vicinity of the root of the wings are not fully understood. The present analysis considers the fuselage to be a rigid body, but the analysis may be extended to treat an elastic fuselage.

The important feature of the method presented herein is the simplification that results from use of the natural modes of a uniform cantilever beam as expansions for the deflection and twist of the vibrating nonuniform free-free wing. With the addition of appropriate rigid-body-displacement terms, these expressions may be made to satisfy all the geometrical boundary conditions for both symmetrical and antisymmetrical wing vibration. Analyzing idealized structures for which exact solutions could be made shows that only a few terms are needed in the expansions to obtain good accuracy.

SYMBOLS

L	length of semispan along elastic axis
E	Young's modulus of elasticity
G	modulus of elasticity in shear
I	bending moment of inertia of wing cross section perpendicular to elastic axis
I_m	polar moment of inertia of mass per unit length of wing about elastic axis
J	torsion constant for cross section perpendicular to elastic axis of wing
I_{F_P}	one-half of pitching polar moment of inertia of fuselage mass about elastic axis of wing at root
I_{F_R}	one-half of rolling polar moment of inertia of fuselage mass about fuselage longitudinal axis
x	distance along elastic axis of wing, measured from center line of fuselage or root of wing
y	deflection of elastic axis of wing with respect to its static equilibrium position; positive upward
φ	angle of twist of wing cross section with reference to its static equilibrium position; positive in stalling direction
θ	angle of pitch of fuselage
Φ	angle of roll of fuselage
Λ	angle of sweep, measured between wing elastic axis and line perpendicular to fuselage longitudinal axis

m	mass of wing per unit length
m_W	total mass of wing
m_F	one-half of mass of fuselage
R_m	ratio of fuselage mass to wing mass $\left(\frac{m_F}{m_W}\right)$
ω	circular frequency of natural mode of vibration, radians per second
p_n	circular frequency of nth natural bending mode of uniform cantilever beam
q_n	circular frequency of nth natural torsional mode of uniform cantilever beam
f	frequency of natural mode of vibration, cycles per second
e	distance between mass center of wing cross section or points of mass concentration and elastic axis of wing; positive when mass center lies forward of elastic axis
e_F	distance between mass center of fuselage and elastic axis of wing at root; positive when mass center lies forward of elastic axis
e_α	distance between point of spring suspension and elastic axis of wing at root; positive when point of suspension lies forward of elastic axis
α	elastic spring constant
a_n	coefficient of nth term in expansion for y
b_m	coefficient of mth term in expansion for φ
i, m, n	integers (1, 2, 3, . . .)
$y_n(x)$	nth bending mode of uniform cantilever beam
$y_n''(x)$	second derivative with respect to x of $y_n(x)$
$\varphi_n(x)$	nth torsional mode of uniform cantilever beam
$\varphi_n'(x)$	first derivative with respect to x of $\varphi_n(x)$

ENERGY EXPRESSIONS AND DEFLECTION FUNCTIONS

In an analysis to determine the modes of vibration of wings it is usually sufficient to consider the equilibrium of one-half the fuselage and the wing semispan only. The airplane is divided along its longitudinal axis with a coordinate system assigned as shown in the following configuration:

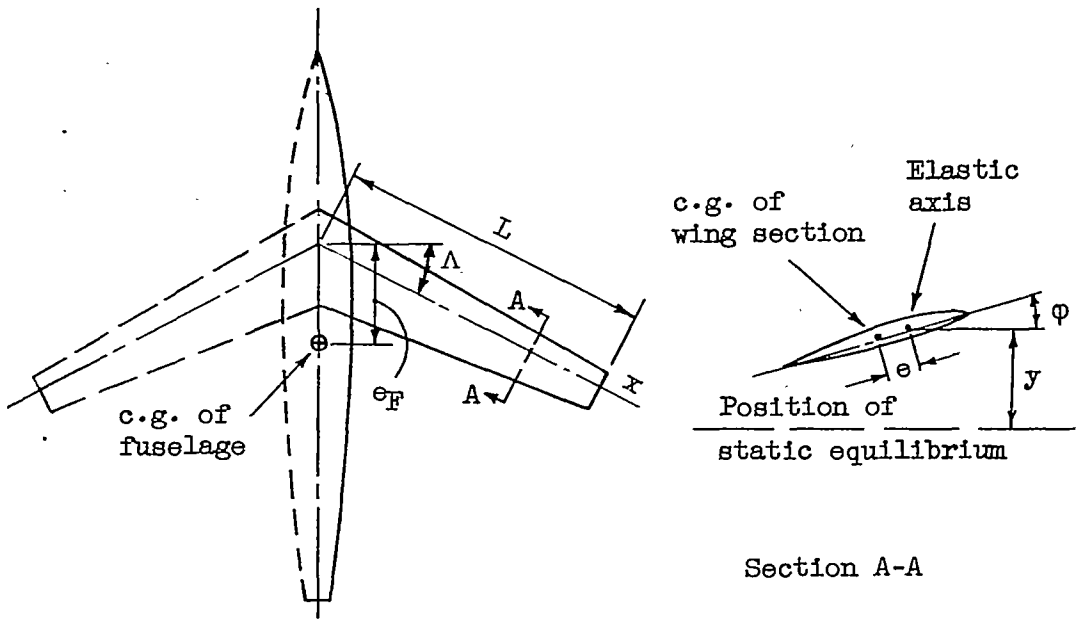

In this analysis the fuselage is assumed to be rigid. Its motion is therefore represented by rigid-body displacement and rotation.

For vibration of this system, the energies considered are the bending, twisting, and kinetic energies of the wing semispan and one-half the kinetic energy of the fuselage. At maximum displacement of the wing the sum of the strain energy of bending and twisting is given by the well-known expression

$$U = \frac{1}{2}\int_0^L EI\left(\frac{d^2y}{dx^2}\right)^2 dx + \frac{1}{2}\int_0^L GJ\left(\frac{d\varphi}{dx}\right)^2 dx \tag{1}$$

The kinetic energy of the wing as it passes through the equilibrium position is given by the equation (see appendix A for derivation)

$$V_1 = \frac{\omega^2}{2}\int_0^L my^2\,dx + \omega^2\int_0^L me\varphi y\,dx + \frac{\omega^2}{2}\int_0^L I_m\varphi^2\,dx \tag{2}$$

One-half the kinetic energy of the fuselage is given similarly by the expression (see appendix A for derivation)

$$V_2 = \frac{\omega^2}{2}\left(m_F y^2 + 2m_F e_F \theta y + I_{F_P}\theta^2 + I_{F_R}\Phi^2\right)_{x=0} \tag{3}$$

It can be shown by geometry that the pitching angle θ and the rolling angle Φ are related to the angle of twist of the wing at the root cross section, the slope of the wing at the root, and the angle of sweep by the following relations

$$\theta = \left(\varphi\cos\Lambda - \frac{dy}{dx}\sin\Lambda\right)_{x=0} \tag{4}$$

$$\Phi = \left(\varphi\sin\Lambda + \frac{dy}{dx}\cos\Lambda\right)_{x=0} \tag{5}$$

The conditions leading to these geometrical relations were pointed out by Lawrence in reference 1.

By the energy method, expansions are chosen to represent the deflection and twist of the wing. In accordance with a principle of this method, which apparently is not very well known, the expansions need only satisfy the geometrical boundary conditions of the problem. The dynamical boundary conditions (shear, moment, torque) are automatically satisfied in the minimization process. A brief account of this feature is given in reference 2.

Convenient expansions for the deflection and twist are the following equations:

$$y(x) = a_o + \bar{a}_o \frac{x}{L} + a_1 y_1 + a_2 y_2 + \cdot \cdot \cdot + a_n y_n + \cdot \cdot \cdot \tag{6}$$

$$\varphi(x) = b_o + b_1 \varphi_1 + b_2 \varphi_2 + \cdot \cdot \cdot b_m \varphi_m + \cdot \cdot \cdot \tag{7}$$

in which the coefficients a_n and b_m may be taken as generalized coordinates. The coefficients a_o, $\bar{a}_o$, and b_o are included to allow the wing to have a rigid-body deflection, a linearly varying deflection, and a rigid-body rotation. The y_n's and φ_m's are bending and torsional modes, respectively, of a uniform cantilever beam written in terms of a unit tip deflection or unit tip rotation. Some of the reasons for choosing these modes will be discussed in the section entitled "Discussion of Method." With the use of the expansions (6) and (7) the geometrical boundary conditions at the wing root are determined solely by the values of the coefficients a_o, $\bar{a}_o$, and b_o. (The coefficient a_o determines the wing root deflection, $\bar{a}_o$ determines the slope of the wing at the root, and b_o determines the angle of rotation of the wing root.) The simplification resulting from this method of dealing with root boundary conditions will be made evident in the section to follow.

Upon substitution of equations (4), (5), (6), and (7) into equations (1), (2), and (3), the energies U, V_1, and V_2 are expressed in terms of the unknown coefficients a_n, b_m, and the unknown frequency ω. (The coefficients a_o, $\bar{a}_o$, and b_o do not appear in the expression for U.)

For the case of a flexible fuselage, expansions similar to equations (6) and (7) can be made for the deflection or twist of the forward and rearward sections of the fuselage. These expansions are then used with appropriate energy terms similar to equations (1) and (2).

BOUNDARY CONDITIONS AND CHARACTERISTIC EQUATIONS OF SWEPT WINGS

Because of the structural symmetry existing about the longitudinal axis of the fuselage, the structure vibrates in natural modes which can be classed as either symmetrical or antisymmetrical about this axis. For convenience, the boundary conditions defining each type of vibration will now be introduced.

For symmetrical vibration, the boundary condition at the wing root is that the fuselage shall not roll, or

$$\Phi = \left(\varphi \sin \Lambda + \frac{dy}{dx} \cos \Lambda\right)_{x=0} = 0 \tag{8}$$

Use of equations (6) and (7) permits this boundary condition to be expressed by the following simple relation between the coefficients $\bar{a}_o$ and b_o

$$\bar{a}_o = -b_o L \tan \Lambda \tag{9}$$

Elimination of $\bar{a}_o$ from V_1 and V_2 by means of this relation leads to the solution for symmetrical modes and frequencies.

For antisymmetrical vibration, the constraining relations at the wing root are that the deflection is zero and that the fuselage shall not pitch, or

$$(y)_{x=0} = 0 \tag{10}$$

and

$$\theta = \left(\varphi \cos \Lambda - \frac{dy}{dx} \sin \Lambda\right)_{x=0} = 0 \tag{11}$$

By use of equations (6) and (7), the boundary conditions may be written

$$a_o = 0 \tag{12}$$

$$b_o = \frac{\bar{a}_o}{L} \tan \Lambda \tag{13}$$

Substitution of these relations into the expressions for V_1 and V_2 leads to the solution for antisymmetrical modes and frequencies.

The characteristic equations for modes and frequencies of vibration (symmetrical and antisymmetrical) can be found by minimization of the expression $V_1 + V_2 - U$ with respect to the unknown coefficients a_i and b_i. For example, the equation obtained by minimization of the energy expression with respect to a_o is

$$a_o(m_w + m_F) + a_1A_{01} + a_2A_{02} + \cdot \cdot \cdot a_nA_{0n}$$

$$+ b_o\left(F_{00} + \frac{m_F e_F}{\cos \Lambda} - LH_0 \tan \Lambda\right) + b_1F_{01} + b_2F_{02} + \cdot \cdot \cdot b_mF_{0m} = 0 \quad (14)$$

The sets of linear homogeneous equations derived in this way are shown in a somewhat condensed form for symmetrical and antisymmetrical vibration in tables I and II. The constants A_{in}, B_{in}, C_{in}, . . . shown in these equations represent integrals which are defined in appendix B. For any problem, the limiting values of the subscripts n and m of a_n and b_m are chosen in accordance with the number of modes being represented by the expansions. The examples to be presented subsequently herein will serve as a guide in this choice. The next section will show that the equations which characterize coupled and uncoupled vibration of an airplane with unswept wings may be obtained simply by crossing out certain rows and columns in table I or table II.

CHARACTERISTIC EQUATIONS FOR VIBRATION OF UNSWEPT WINGS

The equations for vibrating unswept wings may be obtained directly from tables I and II simply by letting the angle of sweep Λ equal zero. The equations for the various types of vibration - coupled bending and torsion, uncoupled bending, and uncoupled torsion - may then be found as described in the following sections. In all these cases it is understood that $\Lambda = 0$.

Coupled Bending and Torsion

Symmetrical and antisymmetrical free-free vibration.- The equations obtained for $\Lambda = 0$ describe symmetrical and antisymmetrical free-free vibration of an unswept wing and fuselage.

Vibration as a cantilever.- The deflection, slope, and twist at the wing root are zero and therefore $a_o = \bar{a}_o = b_o = 0$. The characteristic equations for this type of vibration may be found from table II by crossing out the column headed by $\bar{a}_o$ and the row for a_o.

Uncoupled Bending Vibration

If wing twist and fuselage pitching are prevented, the twisting component φ is zero and consequently the b_m's must be zero. In

tables I and II, therefore, the upper left-hand quadrant, which involves only the a_n's, gives the equations for uncoupled bending vibration. The several types of uncoupled bending vibration may be found by dropping out certain of the remaining equations as follows:

Symmetrical free-free bending.- For symmetrical free-free bending the slope at the root is zero and therefore $\bar{a}_o = 0$. The upper-left quadrant of table I yields the desired equations.

Antisymmetrical free-free bending.- For antisymmetrical free-free bending the deflection at the root is zero, and therefore $a_o = 0$. When $\Lambda = 0$ the upper-left quadrant of table II yields the desired equations.

Cantilever bending.- For cantilever bending the deflection and slope at the root are zero and therefore $a_o = \bar{a}_o = 0$. The equations for this type of vibration may be found from the upper-left quadrant of table I by crossing out the column headed by a_o and the row for a_o.

Uncoupled Torsional Vibration

If wing deflection and fuselage translation are prevented, the deflection component y is zero and consequently the a_n's must be zero. In tables I and II, therefore, all the rows (equations) derived from the minimization of the a_i's and the column headed by a_n's may be crossed out. The remaining equations, the lower-right quadrant, then define uncoupled torsional vibration of a wing-fuselage system.

Symmetrical free-free torsion.- For symmetrical free-free torsion all the equations in the lower-right quadrant of table I are used ($\Lambda = 0$).

Cantilever or antisymmetrical free-free torsion.- For cantilever or antisymmetrical free-free torsion the twist at the root is zero and therefore $b_o = 0$. The equations for this case are found in the lower-right quadrant of table II.

SOLUTION OF CHARACTERISTIC EQUATIONS

It has been shown that the equations characterizing various types of wing vibration may be found in a simple manner from the general sets of equations shown in tables I and II. A solution to a particular set of equations consists in determining values of ω, a_n, and b_n which define the natural frequencies and modes.

Since the equations are homogeneous, values of a_n and b_n other than zero which satisfy the set of equations can be found only when the

determinant of the set of equations is zero. The determinant, which is simply the bracketed terms in tables I and II, contains the unknown frequency ω; the values of ω which cause the determinant to be zero are the natural frequencies of vibration. In order to determine the mode associated with a given natural frequency, one of the unknown coefficients a_n or b_n is given an arbitrary value (unity, for convenience). Mathematical consideration indicates that one of the equations can now be discarded, but it has been found best simply to add two of the equations together and then to solve the resulting set of nonhomogeneous equations simultaneously to obtain the relative values of the other coefficients. The value of frequency used in the solution of these equations is, of course, the frequency value which caused the determinant to be zero. With the coefficients known, the mode associated with the given value of frequency is obtained directly from equations (6) and (7).

The values of ω satisfying the frequency determinant may be found by several methods. Perhaps the simplest way to locate a frequency root is to evaluate the determinant for a number of trial values of ω in the expected vicinity of a natural frequency and to plot a curve of ω against the value of the determinant. In most cases, the value of ω giving a zero determinant can be obtained from the results of three or four evaluations. The evaluations may be performed by the Crout method of solving determinants. (See reference 3.) The Crout method yields solutions rapidly and provides for a running check which minimizes the possibility of computational error. With the procedure just outlined, any desired frequency root and mode can be found independently of the other frequencies and modes.

COMPUTATION OF CONSTANTS

Before the characteristic equations for vibration of the wing can be solved, the constants A_{in}, B_{in}, C_{in}, . . . appearing in these equations and defined in appendix B must be determined from the physical properties of the wing. Appropriate numerical and graphical integration procedures are known for the calculation of such integrals. In order to use the procedures, it is necessary to know the physical properties m, m_e, I_m, EI, and GJ at a number of representative stations $\frac{x}{L}$ along the wing and also the numerical values of the modal functions $y_n(x)$ and $\varphi_n(x)$ and their derivatives y_n'' and φ_n' at these stations. For convenience, $y_n(x)$, $y_n''(x)$, $\varphi_n(x)$, and $\varphi_n'(x)$ $(n = 1, 2, \ldots 5)$ have been computed at ten stations $\left(\frac{x}{L} = 0.1, 0.2, \ldots 0.9, 1.0\right)$ and are presented in tables III and IV. The values at stations other than those listed in the tables may be determined from plotting the modal

functions and reading off the desired values. The constants A_{in}, B_{in}, C_{in}, . . . are then found by multiplying the physical constants by the values of the modal functions at the stations along the wing and integrating over the span. The rapidity with which the integrations can be performed depends principally on the number of stations needed to represent accurately the variation in physical properties along the span and on the integration procedure used.

ACCURACY OF RESULTS

Because of the structural complexity of airplane wings, simplifying assumptions must necessarily be made in any analytical wing-vibration analysis. Discrepancies which have been observed between computed modes and frequencies and experimentally determined ones will therefore include errors due to the assumptions made in the analytical solution and errors due to the fact that the analytical solution is usually derived by an approximate method. In order that the magnitude of the latter type of error might be investigated for the energy solution, a few idealized numerical examples are presented for which exact solutions (based on the same simplifying assumptions, see appendix C) can also be made. A brief description of the examples and the results obtained follows.

Uncoupled free-free bending vibration.- A simple test of the convergence of the energy method for uniform-cantilever-beam mode expansions is to calculate the bending modes of a free-free beam with the use of only a few terms to represent the deflection. The following deflection expansion

$$y = a_o + a_1y_1(x) + a_2y_2(x) + a_3y_3(x) \tag{15}$$

leads to a solution for symmetrical free-free modes represented by the determinant in table V. The calculation of the constants A_{in}, B_{in}, . . . for this case is simplified because a uniform beam is being used. The computations for one of the main diagonal terms $\left(A_{in} - \frac{B_{in}}{\omega^2}\right)_{i=n}$ is, for example

$$\left(A_{in} - \frac{B_{in}}{\omega^2}\right)_{i=n} = \int_0^L m y_n^2 \, dx - \frac{1}{\omega^2}\int_0^L EI\left(y_n''\right)^2 dx$$

$$= m\int_0^L y_n^2 \, dx - \frac{1}{\omega^2}\left(p_n^2 m \int_0^L y_n^2 \, dx\right)$$

$$= m\int_0^L y_n^2 \, dx\left(1 - \frac{p_n^2}{\omega^2}\right)$$

where p_n^2 is the nth bending frequency of the beam as a cantilever (clamped at the center line). The integral $\int_0^L y_n^2 \, dx$ has been evaluated (see reference 4, p. 336), and for bending modes of a uniform cantilever the integral equals $L/4$ if the modes are given in terms of a unit tip deflection. Making use of this fact and dividing through by the factor mL leads to diagonal terms of the form shown in table V. The zeros appear in the table because of the orthogonality of the modal functions in this uniform beam example.

The three lowest frequencies obtained from the fourth-order determinant are compared with the exact frequencies in the following table:

Symmetrical modes	Frequency (radians/sec)		Percent difference
	Exact	Energy	
1	5.60	5.60	0
2	30.25	30.26	0
3	74.50	77.46	4.0

When the $a_4 y_4$ term was added to equation (15), a frequency of 75.37 radians per second (1.2 percent error) was obtained for the third symmetrical mode. The modes calculated by the energy solution are compared with the exact modes in figure 1. The solutions for both a fourth-order and fifth-order determinant are shown for the third mode.

In order to calculate the antisymmetrical modes of the same beam, a_o in equation (15) is replaced by $\bar{a}_o\left(\frac{x}{L}\right)$ which leads to the determinant in table VI. The two lowest frequencies calculated from this determinant are compared with the exact solution in the following table:

Antisymmetrical modes	Frequency (radians/sec)		Percent error
	Exact	Energy	
1	15.42	15.42	0
2	50.0	50.7	1.4

A comparison of the derived modes with the exact modes is shown in figure 2.

From these comparisons the energy solutions are seen to be in good agreement with the exact solution for the first and second symmetrical modes with a fourth-order determinant and for the third mode with a fifth-order determinant (fig. 1). For the first and second antisymmetrical modes (fig. 2) good agreement is found from a fourth-order determinant. In the symmetrical cases, the derived modes contain at least one less nodal point than the highest uniform-cantilever-beam mode used in the deflection expansion and for the antisymmetrical case, the derived modes contain no more nodes than are contained in the uniform cantilever modes. (Zero deflection at the root of a cantilever and at the center line of an antisymmetrical free-free beam is counted as a node.) A simple and, in some cases, conservative rule of thumb, then, that might be followed to ensure adequate representation of a desired mode containing n nodes is to include in the expansions for deflection all terms up to and including the modal function which has $n + 1$ nodes. This rule should be applied separately to both the deflection and rotation components of a mode in the case of coupled vibration.

Mass coupled vibration of a swept wing and fuselage.- A few of the natural frequencies of vibrations of the configuration shown in figure 3 have been determined by both the exact and energy methods. The swept wing is of constant cross section along the span and is mounted on an inflexible fuselage. The parameters assumed are as follows:

Wing parameters:

Young's modulus of elasticity E, psi	10,000,000
Shear modulus G, psi	4,000,000
Bending moment of inertia I, inches^4	800
Torsion constant J, inches^4	1600
Mass of wing m, pound-seconds^2/inches^2	0.025
Polar moment of inertia I_m, pound-seconds^2	16

Fuselage parameters:

One-half of pitching polar moment of inertia I_{F_P}, pound-seconds^2-inches	400,000
One-half of rolling polar moment of inertia I_{F_R}, pound-seconds^2-inches	10,000
Distance between mass center of fuselage and elastic axis of wing at root e_F, inches	-70
Ratio of fuselage mass to wing mass $R_m = \frac{m_F}{m_W}$	3

An exact analysis of the vibration of this configuration leads to two frequency equations, one for symmetrical and one for antisymmetrical modes. The derivation of these equations is given in appendix C.

The energy solution for the symmetrical modes was made by use of the first four terms in the expansion for deflection (equation (6)) and the first three terms in the expansion for twist (equation (7)). Since $\bar{a}_0$ is eliminated in a solution for symmetrical modes, the resulting determinant, table VII, is of the sixth order.

Table VII has been simplified in the manner which has been previously described for tables V and VI. In addition, the zeros in the upper-right and lower-left quadrants of this determinant are present because there is no mass coupling along the wing.

The three lowest frequencies satisfying the determinant are compared with the exact frequencies in the following table:

Symmetrical modes	Frequency (cps)		Percent difference
	Exact	Energy	
1	8.65	8.65	0
2	25.1	25.1	0
3	51.4	51.2	0.4

The modes associated with the frequencies obtained in the energy solution are presented in figures 4, 5, and 6. For the third mode the rule of thumb presented previously is not complied with wholly. The percentage error in frequency, however, is rather small but, in order to ensure that the modal deflection is represented accurately, one additional term should probably be included in the expansion for deflection.

In order to check the derivation of the antisymmetrical frequency equations the lowest antisymmetrical-mode frequency was found from the fourth-order determinant shown in table VIII. The value was 14.66 cycles per second which is also the exact value. The associated mode obtained from the energy solution is presented in figure 7.

DISCUSSION OF METHOD

As shown by the numerical examples, application of the energy method to vibration problems leads to results which compare favorably with known exact solutions. Accuracy of results alone, however, would not justify use of the method in a given problem unless the desired accuracy of frequencies and modes can be obtained with a reasonable amount of labor. Although no attempt is made to compare the labor required to compute modes and frequencies by the energy method with that required by other procedures, the following facts about the energy method and the Crout solutions are presented for consideration:

(1) The number of terms taken in the expansions for deflection and rotation determines the number of coordinates in the solution and hence the order of the determinants used. The numerical examples have shown that solutions for relatively complicated types of wing vibration can be obtained from low-order determinants, which is desirable from consideration of computing time. (Preliminary investigations have shown that a number of the coupled modes of the airplane considering the fuselage elastic can be obtained from an eighth-order determinant.) Since each mode and frequency is obtained in a manner independent of other modes and without recourse to an orthogonality condition, the modes may be computed in any desired sequence and with varying order determinants, the order depending on the number of terms needed to give the particular mode to the desired accuracy.

(2) For a given mass and stiffness variation along the wing, most of the constants A_{in}, B_{in}, C_{in}, . . . for the wing are used in the solutions for both symmetrical and antisymmetrical vibration. Thus a given set of equations for symmetrical vibration can be used for computing the antisymmetrical modes after only a few new constants have been computed.

(3) The effect of adding to or subtracting from the mass on the wing, of considering elastically mounted motors, or of considering an

elastic fuselage is easily introduced into the energy solution. (See appendix D for the method of introducing spring mountings.)

(4) The Crout method has been found to be a highly efficient way to solve the characteristic-value equations derived from the energy approach. The characteristic values, or natural frequencies, are quickly located by a few trial and error evaluations of the determinant of the homogeneous equations with assumed values of ω in the vicinity of a natural frequency; and the unknown coefficients defining the modes are then found by a straightforward calculation.

The expansions for deflection and twist have been made in terms of uniform-cantilever-mode functions for several reasons. Other functions could have been used. For example, power-series expansions for both deflection and twist have been used for the problem considered in this paper. These expansions work well, are simple and convenient, but may involve computational difficulties which are not present when cantilever functions are used. The off-diagonal terms in the determinant for the power-series solution are usually larger than the diagonal elements. Small differences of large numbers result in the evaluation of the determinant so that the computations must be carried to a large number of significant figures in order to avoid errors. When uniform cantilever functions are used, however, there is in most problems a resemblance between each cantilever function and one of the modes being derived. The functions therefore have a tendency to be orthogonal (since they are orthogonal when the structure is uniform) with the consequence that the off-diagonal terms of the determinant are small in comparison with the diagonal terms. Evaluation can therefore be made easily without the use of a large number of significant figures. The examples presented in this paper were computed with the use of four or five significant figures.

CONCLUSIONS

A solution is presented for the determination of the coupled and uncoupled modes and frequencies of wings (swept or unswept) mounted on a fuselage. Characteristic equations describing symmetrical and antisymmetrical modes of vibration are derived by an energy method which makes use of the natural modes of a uniform cantilever beam. The use of these modes and the principle that only the geometrical boundary conditions need to be satisfied when a solution is made results in a direct procedure with a considerable saving in work. The method points out that the dynamical boundary conditions, such as shear and moment, are automatically satisfied when this principle is used.

The application of the characteristic equations to various types of wing vibrations is illustrated by numerical examples. The numerical examples chosen were susceptible to exact solution and show that accurate modes and frequencies can be obtained from low-order determinants.

Langley Aeronautical Laboratory
National Advisory Committee for Aeronautics
Langley Field, Va., August 30, 1948

APPENDIX A

DERIVATION OF EXPRESSIONS FOR KINETIC ENERGY

In the energy solution used herein, the potential energy stored in the wing at maximum displacement and the kinetic energy of the wing-fuselage system in passing through the equilibrium position must be known. Since the equations for potential energy of bending and twist are well known (see, for example, reference 4), the present appendix is confined to a derivation of the kinetic-energy expression.

In figure 8, a cross section of the wing is shown at the instant that it passes the equilibrium position; the elastic axis is assumed to have a vertical velocity v, and the cross section is assumed to be rotating at an angular velocity Ω. Any element of mass dm having the coordinates (r,θ) can be shown to have a total velocity such that

$$v_t^2 = (v + \Omega r \cos \theta)^2 + \Omega^2 r^2 \sin^2\theta \tag{A1}$$

The kinetic energy of the element will be $\frac{1}{2} dm\, v_t^2$. If y and φ are the maximum values of deflection and twist, the velocity v and rotational velcoity Ω may be shown to be equal to ωy and $\omega\varphi$, respectively. Substitution of these values in the expression for total velocity and integration of the kinetic energy of all the elements over the cross section gives for the total kinetic energy of unit length of the wing at the cross section under consideration

$$\frac{\omega^2}{2} m\left(y^2 + 2ey\varphi + k^2\varphi^2\right)$$

where e is the distance between the elastic axis and the center of gravity (e is positive when center of gravity is forward of the elastic axis) of the cross section and k is the radius of gyration of the cross section about the elastic axis. Integration of the kinetic energy over the length of the wing gives for the total kinetic energy of the wing

$$V_1 = \frac{\omega^2}{2} \int_0^L m\left(y^2 + 2ey\varphi + k^2\varphi^2\right) dx \tag{A2}$$

The expression for the kinetic energy of vertical and pitching motion of the fuselage can be found by applying equation (A2) to the fuselage mass. The angle φ, however, is replaced by the pitching angle of the fuselage given by $\left(\varphi \cos \Lambda - \frac{dy}{dx} \sin \Lambda\right)_{x=0}$. If θ is used to denote the pitching angle, the kinetic energy of vertical and pitching motion of the fuselage is

$$\frac{\omega^2}{2}\left[m_F\left(y^2 + 2e_F y\theta + k_F{}^2\theta^2\right)\right]_{x=0}$$

or

$$\frac{\omega^2}{2}\left(m_F y^2 + 2m_F e_F y\theta + I_{F_P}\theta^2\right)_{x=0}$$

The kinetic energy of the fuselage in rolling motion is

$$\frac{\omega^2}{2} I_{F_R}\Phi^2$$

where Φ is the angle of roll of the fuselage given by $\left(\varphi \sin \Lambda + \frac{dy}{dx} \cos \Lambda\right)_{x=0}$. The total kinetic energy of the fuselage is then

$$V_2 = \frac{\omega^2}{2}\left(m_F y^2 + 2m_F e_F y\theta + I_{F_P}\theta^2 + I_{F_R}\Phi^2\right)_{x=0} \tag{A3}$$

in which y, θ, and Φ are understood to be the maximum values of those quantities.

APPENDIX B

DEFINITION OF CONSTANTS IN CHARACTERISTIC EQUATIONS

The constants A_{in}, B_{in}, C_{in}, . . . found in the equations of tables I and II represent integrals for which the integrations are performed from the center line of the fuselage or root of the wing to the wing tip. The integrations are as indicated:

$$A_{in} = \int_0^L m y_i y_n \, dx$$

$$B_{in} = \int_0^L EI y_i'' y_n'' \, dx$$

$$C_{in} = \int_0^L I_m \varphi_i \varphi_n \, dx$$

$$D_{in} = \int_0^L GJ \varphi_i' \varphi_n' \, dx$$

$$F_{in} = \int_0^L m e y_i \varphi_n \, dx$$

$$G_n = \int_0^L m e \frac{x}{L} \varphi_n \, dx$$

$$H_n = \int_0^L m \frac{x}{L} y_n \, dx$$

$$P = \int_0^L m \left(\frac{x}{L}\right)^2 dx$$

APPENDIX C

DERIVATION OF FREQUENCY EQUATIONS FOR VIBRATION OF SWEPT WINGS

An exact solution for frequencies and modes of vibration of swept wings can readily be made only for an idealized structure representing the sweptback-wing airplane. Such a configuration is shown in figure 3. The deflection and twist of the wings are assumed to conform to elementary engineering beam theory. The motion of the wings can then be derived by a particular solution to the following familiar differential equations

$$EI \frac{d^4y}{dx^4} = m\omega^2 y \tag{C1}$$

$$GJ \frac{d^2\varphi}{dx^2} = -I_m\omega^2\varphi \tag{C2}$$

The general solutions are

$$y = C_1 \sinh px + C_2 \cosh px + C_3 \sin px + C_4 \cos px \tag{C3}$$

$$\varphi = C_5 \sin qx + C_6 \cos qx \tag{C4}$$

where

$$p = \sqrt[4]{\frac{m\omega^2}{EI}} \tag{C5}$$

$$q = \sqrt{\frac{I_m\omega^2}{GJ}} \tag{C6}$$

Values for the six unknown constants in equations (C3) and (C4) must be determined from the known boundary conditions at the root and tip of the wing. At the wing tip, the following conditions exist:

$$\frac{d^2y}{dx^2} = \frac{d^3y}{dx^3} = \frac{d\varphi}{dx} = 0 \tag{C7}$$

When the wing is vibrating in symmetrical modes, the following conditions at the root must also be true:

$$\left(\frac{dy}{dx}\cos\Lambda + \varphi\sin\Lambda\right)_{x=0} = 0 \tag{C8}$$

$$\left[-EI\frac{d^3y}{dx^3} + \omega^2 m_F\left(y - e\frac{dy}{dx}\sin\Lambda + e\varphi\cos\Lambda\right)\right]_{x=0} = 0 \tag{C9}$$

$$\left[-EI\frac{d^2y}{dx^2}\sin\Lambda + GJ\frac{d\varphi}{dx}\cos\Lambda + \omega^2 I_{F_P}\left(\varphi\cos\Lambda - \frac{dy}{dx}\sin\Lambda\right)\right.$$

$$\left. + \omega^2 m_F e_F y\right]_{x=0} = 0 \tag{C10}$$

Substitution of equations (C3) and (C4) into the six boundary-condition equations leads to six homogeneous equations in terms of the unknown coefficients $C_1, C_2, \ldots$ and the unknown frequency ω. Since values of $C_1, C_2, \ldots$ other than zero which satisfy the set of equations can be found only when the determinant of the set of equations is zero, the natural frequencies of vibration are found as those values of ω which cause the determinant to be zero. Expansion of the determinant of the set of equations leads to a single equation containing the unknown frequency ω. This frequency equation can be simplified to the form

$$- \left(\frac{\theta^3 I_{F_P}}{mL^3 \sin \Lambda} + \theta N \frac{GJ}{EI} \frac{\cos^2 \Lambda}{\sin \Lambda} \tan \theta^2 N \right) \left[(\cos \theta \sinh \theta + \sin \theta \cosh \theta) \right.$$

$$\left. + \frac{\theta m_F}{mL} (1 + \cos \theta \cosh \theta) \right] - \frac{2\theta^2 e_F m_F}{mL^2} \sin \theta \sinh \theta$$

$$+ \left(\frac{\theta^2 e_F m_F}{mL^2} \right)^2 \frac{1}{\sin \Lambda} (1 + \cos \theta \cosh \theta) + \frac{\theta m_F}{mL} \sin \Lambda (\cos \theta \sinh \theta$$

$$- \sin \theta \cosh \theta) - \sin \Lambda (1 - \cos \theta \cosh \theta) = 0 \tag{C11}$$

where p, q, and ω have been replaced by the parameters θ and N having the following relationship to p, q, and ω

$$\theta = Lp = L\sqrt[4]{\frac{m\omega^2}{EI}} \tag{C12}$$

$$\theta N = \frac{q}{p} \tag{C13}$$

Therefore

$$N = \frac{1}{L}\sqrt{\frac{I_m}{m} \frac{EI}{GJ}} \tag{C14}$$

The roots θ to equation (C11) define the frequencies of the natural symmetrical modes of vibration of the swept-wing configurations. For the parameters given in the section entitled "Mass coupled vibration of a swept wing and fuselage," the first three roots to this equation are

$$\theta_1 = 1.959$$

$$\theta_2 = 3.336$$

$$\theta_3 = 4.772$$

In order to derive the frequency equation for the antisymmetrical modes of vibration, the boundary conditions defining antisymmetrical vibration must be satisfied. In addition to the boundary conditions given by equation (C7), the following conditions must be true:

$$(y)_{x=0} = 0 \tag{C15}$$

$$\left(\varphi \cos \Lambda - \frac{dy}{dx} \sin \Lambda\right)_{x=0} = 0 \tag{C16}$$

$$\left[EI \frac{d^2y}{dx^2} \cos \Lambda + GJ \frac{d\varphi}{dx} \sin \Lambda\right.$$

$$\left. + \omega^2 I_{F_R}\left(\frac{dy}{dx} \cos \Lambda + \varphi \sin \Lambda\right)\right]_{x=0} = 0 \tag{C17}$$

Use of the conditions given in equations (C7), (C15), (C16), and (C17) yields as the frequency equation for antisymmetrical modes

$$\left(\frac{\theta^3 I_{F_R}}{mL^3 \cos \Lambda} + \theta N \frac{GJ}{EI} \frac{\sin^2 \Lambda}{\cos \Lambda} \tan \theta^2 N\right)(1 + \cos \theta \cosh \theta)$$

$$+ \cos \Lambda \, (\sin \theta \cosh \theta - \cos \theta \sinh \theta) = 0 \tag{C18}$$

For the parameters given in the section entitled "Mass coupled vibration of a swept wing and fuselage," the first three roots to this equation are

$$\theta_1 = 2.551$$

$$\theta_2 = 3.462$$

$$\theta_3 = 4.79$$

APPENDIX D

THE EFFECT OF A SPRING SUSPENSION ON THE NATURAL FREQUENCIES AND MODES OF A WING (SWEPT OR UNSWEPT) AND FUSELAGE

Frequencies and modes of airplane wings are often determined experimentally with the airplane suspended at the center of gravity by a linear spring. An evaluation of the changes in vibration characteristics (symmetrical modes only are affected) of the airplane due to the spring suspension can easily be made by the energy method. The potential energy stored in the spring is given by

$$V_\alpha = \frac{1}{2}\alpha\left(y + \frac{e_\alpha \varphi}{\cos \Lambda}\right)^2_{x=0} \tag{D1}$$

With the expansion used for y and φ, equation (D1) reduces simply to

$$V_\alpha = \frac{1}{2}\alpha\left(a_o + \frac{e_\alpha b_o}{\cos \Lambda}\right)^2 \tag{D2}$$

If V_α is added to the energies U, V_1, and V_2, and the expression $U + V_\alpha - V_1 - V_2$ is minimized with respect to the coefficients a_o and b_o, the following equations are derived:

For a_o,

$$a_o\left(m_W + m_F - \frac{\alpha}{\omega^2}\right) + \sum_{n=1}^{s} a_n A_{in} + b_o\left(F_{i0} + \frac{m_F e_F}{\cos \Lambda} - LH_i \tan \Lambda\right.$$

$$\left. - \frac{\alpha e_\alpha}{\omega^2 \cos \Lambda}\right) + \sum_{n=1}^{t} b_n F_{in} = 0 \qquad (i = 0) \tag{D3}$$

For b_o,

$$a_o\left(F_{i0} + \frac{m_F e_F}{\cos \Lambda} - LH_i \tan \Lambda - \frac{\alpha e_\alpha}{\omega^2 \cos \Lambda}\right) + \sum_{n=1}^{s} a_n\left(F_{ni} - LH_n \tan \Lambda\right)$$

$$+ b_o\left(I_W + L^2 P \tan^2 \Lambda + \frac{I_{F_P}}{\cos^2 \Lambda} - 2LG_i \tan \Lambda - \frac{\alpha e_\alpha^2}{\omega^2 \cos^2 \Lambda}\right)$$

$$+ \sum_{n=1}^{t} b_n\left(C_{in} - LG_n \tan \Lambda\right) = 0 \qquad (i = 0) \tag{D4}$$

These two equations replace rows for a_o and b_o in table I when the natural vibration is restrained by a linear spring at the center of gravity of the airplane.

REFERENCES

1. Lawrence, H. R.: The Dynamics of a Swept Wing. Jour. Aero. Sci., vol. 14, no. 11, Nov. 1947, pp. 643-650.

2. Courant, R.: Variational Methods for the Solution of Problems of Equilibrium and Vibrations. Bull. Am. Math. Soc., vol. 49, Jan. 1943, pp. 1-23.

3. Crout, Prescott D.: A Short Method for Evaluating Determinants and Solving Systems of Linear Equations with Real or Complex Coefficients. Trans. A.I.E.E., vol. 60, 1941, pp. 1235-1240. (Abridged as Marchant Methods MM-182, Sept. 1941, Marchant Calculating Machine Co., Oakland, Calif.)

4. Timoshenko, S.: Vibration Problems in Engineering. Second ed., D. Van Nostrand Co., Inc., 1937.

TABLE I.- EQUATIONS FOR SYMMETRICAL VIBRATION OF SWEPT WING

	a_0	a_1	a_2	$\cdots a_n \cdots$	b_0	b_1	b_2	$\cdots b_m \cdots$	
For a_i									
$i = 0$	$(m_w + m_f)$	A_{01}	A_{02}	A_{0n}	$\left(F_{00} + \frac{m_f c_f}{\cos\Lambda} - LH_0 \tan\Lambda\right)$	F_{01}	F_{02}	F_{0m}	
$i = 1$	A_{01}	$\left(A_{11} - \frac{B_{11}}{\omega^2}\right)$	$\left(A_{12} - \frac{B_{12}}{\omega^2}\right)$	$\left(A_{1n} - \frac{B_{1n}}{\omega^2}\right)$	$(F_{10} - LH_1 \tan\Lambda)$	F_{11}	F_{12}	F_{1m}	
$i = 2$	A_{02}	$\left(A_{12} - \frac{B_{12}}{\omega^2}\right)$	$\left(A_{22} - \frac{B_{22}}{\omega^2}\right)$	$\left(A_{2n} - \frac{B_{2n}}{\omega^2}\right)$	$(F_{20} - LH_2 \tan\Lambda)$	F_{21}	F_{22}	F_{2m}	
$i = n$	A_{0n}	$\left(A_{1n} - \frac{B_{1n}}{\omega^2}\right)$	$\left(A_{2n} - \frac{B_{2n}}{\omega^2}\right)$	$\left(A_{nn} - \frac{B_{nn}}{\omega^2}\right)$	$(F_{n0} - LH_n \tan\Lambda)$	F_{n1}	F_{n2}	F_{nm}	$= 0$
For b_i									
$i = 0$	$\left(F_{00} + \frac{m_f c_f}{\cos\Lambda} - LH_0 \tan\Lambda\right)$	$(F_{10} - LH_1 \tan\Lambda)$	$(F_{20} - LH_2 \tan\Lambda)$	$(F_{n0} - LH_n \tan\Lambda)$	$\left(G_{00} + L^2 F \tan^2\Lambda + \frac{I_{x_p}}{\cos^2\Lambda} - 2LG_0 \tan\Lambda\right)$	$(G_{01} - LG_1 \tan\Lambda)$	$(G_{02} - LG_2 \tan\Lambda)$	$(G_{0m} - LG_m \tan\Lambda)$	
$i = 1$	F_{01}	F_{11}	F_{21}	F_{n1}	$(G_{01} - LG_1 \tan\Lambda)$	$\left(G_{11} - \frac{D_{11}}{\omega^2}\right)$	$\left(G_{12} - \frac{D_{12}}{\omega^2}\right)$	$\left(G_{1m} - \frac{D_{1m}}{\omega^2}\right)$	
$i = 2$	F_{02}	F_{12}	F_{22}	F_{n2}	$(G_{02} - LG_2 \tan\Lambda)$	$\left(G_{12} - \frac{D_{12}}{\omega^2}\right)$	$\left(G_{22} - \frac{D_{22}}{\omega^2}\right)$	$\left(G_{2m} - \frac{D_{2m}}{\omega^2}\right)$	
$i = m$	F_{0m}	F_{1m}	F_{2m}	F_{nm}	$(G_{0m} - LG_m \tan\Lambda)$	$\left(G_{1m} - \frac{D_{1m}}{\omega^2}\right)$	$\left(G_{2m} - \frac{D_{2m}}{\omega^2}\right)$	$\left(G_{mm} - \frac{D_{mm}}{\omega^2}\right)$	

TABLE II.- EQUATIONS FOR ANTISYMMETRICAL VIBRATION OF SWEPT WING

$$
\begin{array}{l}
\\
\text{For } a_i \\
i = 0 \\
i = 1 \\
i = 2 \\
i = n \\
\text{For } b_i \\
i = 1 \\
i = 2 \\
i = m
\end{array}
\begin{array}{c}
\begin{array}{ccccccc}
\bar{a}_0 & a_1 & a_2 & \cdots a_n \cdots & b_1 & b_2 & \cdots b_m \cdots
\end{array} \\
\begin{bmatrix}
\left(P + \frac{C_{00}}{L^2}\tan^2\Lambda + \frac{I_{F_R}}{L^2\cos^2\Lambda} + \frac{2}{L}G_0\tan\Lambda\right) & \left(H_1 + \frac{F_{10}}{L}\tan\Lambda\right) & \left(H_2 + \frac{F_{20}}{L}\tan\Lambda\right) & \left(H_n + \frac{F_{n0}}{L}\tan\Lambda\right) & \left(\frac{C_{01}}{L}\tan\Lambda + G_1\right) & \left(\frac{C_{02}}{L}\tan\Lambda + G_2\right) & \left(\frac{C_{0m}}{L}\tan\Lambda + G_m\right) \\
\left(H_1 + \frac{F_{10}}{L}\tan\Lambda\right) & \left(A_{11} - \frac{B_{11}}{\omega^2}\right) & \left(A_{12} - \frac{B_{12}}{\omega^2}\right) & \left(A_{1n} - \frac{B_{1n}}{\omega^2}\right) & F_{11} & F_{12} & F_{1m} \\
\left(H_2 + \frac{F_{20}}{L}\tan\Lambda\right) & \left(A_{12} - \frac{B_{12}}{\omega^2}\right) & \left(A_{22} - \frac{B_{22}}{\omega^2}\right) & \left(A_{2n} - \frac{B_{2n}}{\omega^2}\right) & F_{21} & F_{22} & F_{2m} \\
\left(H_n + \frac{F_{n0}}{L}\tan\Lambda\right) & \left(A_{1n} - \frac{B_{1n}}{\omega^2}\right) & \left(A_{2n} - \frac{B_{2n}}{\omega^2}\right) & \left(A_{nn} - \frac{B_{nn}}{\omega^2}\right) & F_{n1} & F_{n2} & F_{nm} \\
\left(\frac{C_{01}}{L}\tan\Lambda + G_1\right) & F_{11} & F_{21} & F_{n1} & \left(C_{11} - \frac{D_{11}}{\omega^2}\right) & \left(C_{12} - \frac{D_{12}}{\omega^2}\right) & \left(C_{1m} - \frac{D_{1m}}{\omega^2}\right) \\
\left(\frac{C_{02}}{L}\tan\Lambda + G_2\right) & F_{12} & F_{22} & F_{n2} & \left(C_{12} - \frac{D_{12}}{\omega^2}\right) & \left(C_{22} - \frac{D_{22}}{\omega^2}\right) & \left(C_{2m} - \frac{D_{2m}}{\omega^2}\right) \\
\left(\frac{C_{0m}}{L}\tan\Lambda + G_m\right) & F_{1m} & F_{2m} & F_{nm} & \left(C_{1m} - \frac{D_{1m}}{\omega^2}\right) & \left(C_{2m} - \frac{D_{2m}}{\omega^2}\right) & \left(C_{mm} - \frac{D_{mm}}{\omega^2}\right)
\end{bmatrix}
\end{array}
= 0
$$

TABLE III.- BENDING MODES OF A UNIFORM CANTILEVER BEAM AND THEIR SECOND DERIVATIVES

$\frac{x}{L}$	y_1	y_2	y_3	y_4	y_5	
1.0	1.0000	1.0000	1.0000	1.0000	1.0000	0
.9	.8624	.5237	.2285	-.0520	-.2940	.1
.8	.7255	.0700	-.3949	-.6430	-.6005	.2
.7	.5909	-.3170	-.6574	-.3974	.2257	.3
.6	.4611	-.5895	-.4738	.3265	.7002	.4
.5	.3395	-.7136	.0197	.7071	.0007	.5
.4	.2299	-.6835	.5297	.3156	-.6966	.6
.3	.1365	-.5261	.7562	-.4339	-.2113	.7
.2	.0638	-.3010	.6045	-.7538	.6596	.8
.1	.0168	-.0926	.2281	-.3850	.5372	.9
0	0	0	0	0	0	1.0
	$\frac{L^2 y_1''}{3.516}$	$-\frac{L^2 y_2''}{22.03}$	$\frac{L^2 y_3''}{61.70}$	$-\frac{L^2 y_4''}{120.9}$	$\frac{L^2 y_5''}{199.9}$	$\frac{x}{L}$

TABLE IV.- TORSIONAL MODES OF A UNIFORM CANTILEVER BEAM AND THEIR FIRST DERIVATIVES

$\frac{x}{L}$	φ_1	φ_2	φ_3	φ_4	φ_5	
1.0	1.0000	1.0000	1.0000	1.0000	1.0000	0
.9	.9877	.8910	.7071	.4540	.1564	.1
.8	.9511	.5878	0	-.5878	-.9511	.2
.7	.8910	.1564	-.7071	-.9877	-.4540	.3
.6	.8090	-.3090	-1.0000	-.3090	.8090	.4
.5	.7071	-.7071	-.7071	.7071	.7071	.5
.4	.5878	-.9511	0	.9511	-.5878	.6
.3	.4540	-.9877	.7071	.1564	-.8910	.7
.2	.3090	-.8090	1.0000	-.8090	.3090	.8
.1	.1564	-.4540	.7071	-.8910	.9877	.9
0	0	0	0	0	0	1.0
	$\frac{2L\varphi_1'}{\pi}$	$-\frac{2L\varphi_2'}{3\pi}$	$\frac{2L\varphi_3'}{5\pi}$	$-\frac{2L\varphi_4'}{7\pi}$	$\frac{2L\varphi_5'}{9\pi}$	$\frac{x}{L}$

NACA

TABLE V.- EQUATIONS FOR SYMMETRICAL FREE-FREE-BEAM EXAMPLE

$$
\begin{array}{cccc}
a_0 & a_1 & a_2 & a_3 \\
\end{array}
$$

$$
\begin{vmatrix}
1 & \frac{1}{L}\int_0^L y_1\,dx & \frac{1}{L}\int_0^L y_2\,dx & \frac{1}{L}\int_0^L y_3\,dx \\
\frac{1}{L}\int_0^L y_1\,dx & \frac{1}{4}\left(1 - \frac{p_1^2}{\omega^2}\right) & 0 & 0 \\
\frac{1}{L}\int_0^L y_2\,dx & 0 & \frac{1}{4}\left(1 - \frac{p_2^2}{\omega^2}\right) & 0 \\
\frac{1}{L}\int_0^L y_3\,dx & 0 & 0 & \frac{1}{4}\left(1 - \frac{p_3^2}{\omega^2}\right)
\end{vmatrix}
$$

$$\frac{EI}{mL^4} = 1$$

$$p_1^2 = 12.36 \qquad p_2^2 = 485.5 \qquad p_3^2 = 3807.0$$

$$\frac{1}{L}\int_0^L y_1\,dx = 0.3915 \qquad \frac{1}{L}\int_0^L y_2\,dx = -0.2169 \qquad \frac{1}{L}\int_0^L y_3\,dx = 0.1273$$

NACA

TABLE VI.- EQUATIONS FOR ANTISYMMETRICAL FREE-FREE-BEAM EXAMPLE

$$
\begin{array}{cccc}
\bar{a}_0 & a_1 & a_2 & a_3
\end{array}
$$

$$
\left|
\begin{array}{cccc}
\frac{1}{L}\int_0^L \left(\frac{x}{L}\right)^2 dx & \frac{1}{L}\int_0^L \frac{x}{L} y_1\, dx & \frac{1}{L}\int_0^L \frac{x}{L} y_2\, dx & \frac{1}{L}\int_0^L \frac{x}{L} y_3\, dx \\
\frac{1}{L}\int_0^L \frac{x}{L} y_1\, dx & \frac{1}{4}\left(1 - \frac{p_1^2}{\omega^2}\right) & 0 & 0 \\
\frac{1}{L}\int_0^L \frac{x}{L} y_2\, dx & 0 & \frac{1}{4}\left(1 - \frac{p_2^2}{\omega^2}\right) & 0 \\
\frac{1}{L}\int_0^L \frac{x}{L} y_3\, dx & 0 & 0 & \frac{1}{4}\left(1 - \frac{p_3^2}{\omega^2}\right)
\end{array}
\right|
$$

$p_1^2 = 12.36$ $\qquad$ $p_2^2 = 485.5$ $\qquad$ $p_3^2 = 3807.0$

$$\frac{1}{L}\int_0^L \left(\frac{x}{L}\right)^2 dx = \frac{1}{3} \qquad \frac{1}{L}\int_0^L \frac{x}{L} y_1\, dx = 0.2844 \qquad \frac{1}{L}\int_0^L \frac{x}{L} y_2\, dx = -0.04535$$

$$\frac{1}{L}\int_0^L \frac{x}{L} y_3\, dx = 0.015$$

TABLE VII.- EQUATIONS FOR SYMMETRICAL VIBRATION OF SWEPT-WING EXAMPLE

$$
\begin{array}{cccccc}
a_0 & a_1 & a_2 & b_0 & b_1 & b_2 \\
\end{array}
$$

$$
a = \begin{vmatrix}
(1 + R_m) & \frac{1}{L}\int_0^L y_1\,dx & \frac{1}{L}\int_0^L y_2\,dx & \left(\frac{R_m e_F}{\cos\Lambda} - \frac{L}{2}\right) & 0 & 0 \\
\frac{1}{L}\int_0^L y_1\,dx & \frac{1}{4}\left(1 - \frac{p_1^2}{\omega^2}\right) & 0 & -\int_0^L \frac{x}{L} y_1\,dx & 0 & 0 \\
\frac{1}{L}\int_0^L y_2\,dx & 0 & \frac{1}{4}\left(1 - \frac{p_2^2}{\omega^2}\right) & -\int_0^L \frac{x}{L} y_2\,dx & 0 & 0 \\
\left(\frac{R_m e_F}{\cos\Lambda} - \frac{L}{2}\right) & -\int_0^L \frac{x}{L} y_1\,dx & -\int_0^L \frac{x}{L} y_2\,dx & \left(\frac{I_m}{m} + \frac{L^2}{3} + \frac{I_{F_P}}{m_W \cos^2\Lambda}\right) & \frac{I_m}{m}\frac{1}{L}\int_0^L \varphi_1\,dx & \frac{I_m}{m}\frac{1}{L}\int_0^L \varphi_2\,dx \\
0 & 0 & 0 & \frac{I_m}{m}\frac{1}{L}\int_0^L \varphi_1\,dx & \frac{1}{2}\frac{I_m}{m}\left(1 - \frac{q_1^2}{\omega^2}\right) & 0 \\
0 & 0 & 0 & \frac{I_m}{m}\frac{1}{L}\int_0^L \varphi_2\,dx & 0 & \frac{1}{2}\frac{I_m}{m}\left(1 - \frac{q_2^2}{\omega^2}\right)
\end{vmatrix}
$$

$$p_1^2 = 12.36\,\frac{EI}{mL^4} = 2472.4 \qquad q_1^2 = \frac{\pi^2}{4}\,\frac{GJ}{I_m L^2} = 2500\pi^2$$

$$p_2^2 = 486\,\frac{EI}{mL^4} = 97105 \qquad q_2^2 = \frac{9\pi^2}{4}\,\frac{GJ}{I_m L^2} = 22500\pi^2$$

$$R_m = \frac{m_F}{m_W} = 3 \qquad \frac{I_m}{m} = 640 \qquad \frac{1}{L}\int_0^L \varphi_1\,dx = \frac{2}{\pi} \qquad \frac{1}{L}\int_0^L \varphi_2\,dx = \frac{2}{3\pi}$$

$$\Lambda = 45^\circ \qquad \tan\Lambda = 1$$

(See tables V and VI for values of other integrals.)

TABLE VIII.- EQUATIONS FOR ANTISYMMETRICAL VIBRATION OF A SWEPT-WING EXAMPLE

$$
\begin{array}{cccc}
\bar{a}_o & a_1 & a_2 & b_1 \\
\left(\frac{1}{L}\int_0^L \left(\frac{x}{L}\right)^2 dx + \frac{I_m}{m_w L} + \frac{I_{F_R}}{m_w L^2 \cos^2\Lambda}\right) & \frac{1}{L}\int_0^L \frac{x}{L} y_1\, dx & \frac{1}{L}\int_0^L \frac{x}{L} y_2\, dx & \frac{I_m}{m}\frac{1}{L}\int_0^L \varphi_1\, dx \\
\frac{1}{L}\int_0^L \frac{x}{L} y_1\, dx & \frac{1}{4}\left(1 - \frac{p_1^2}{\omega^2}\right) & 0 & 0 \\
\frac{1}{L}\int_0^L \frac{x}{L} y_2\, dx & 0 & \frac{1}{4}\left(1 - \frac{p_2^2}{\omega^2}\right) & 0 \\
\frac{I_m}{m}\frac{1}{L}\int_0^L \varphi_1\, dx & 0 & 0 & \frac{1}{2}\frac{I_m}{m}\left(1 - \frac{q_1^2}{\omega^2}\right)
\end{array}
$$

$p_1^2 = 2427.4$ $\qquad$ $p_2^2 = 97105$ $\qquad$ $q_1^2 = \frac{10000\pi^2}{4}$

$b_o = \frac{a_o'}{L} \tan \Lambda$ $\qquad$ $\Lambda = 45^\circ$

(See tables VI and VII for values of integrals.)

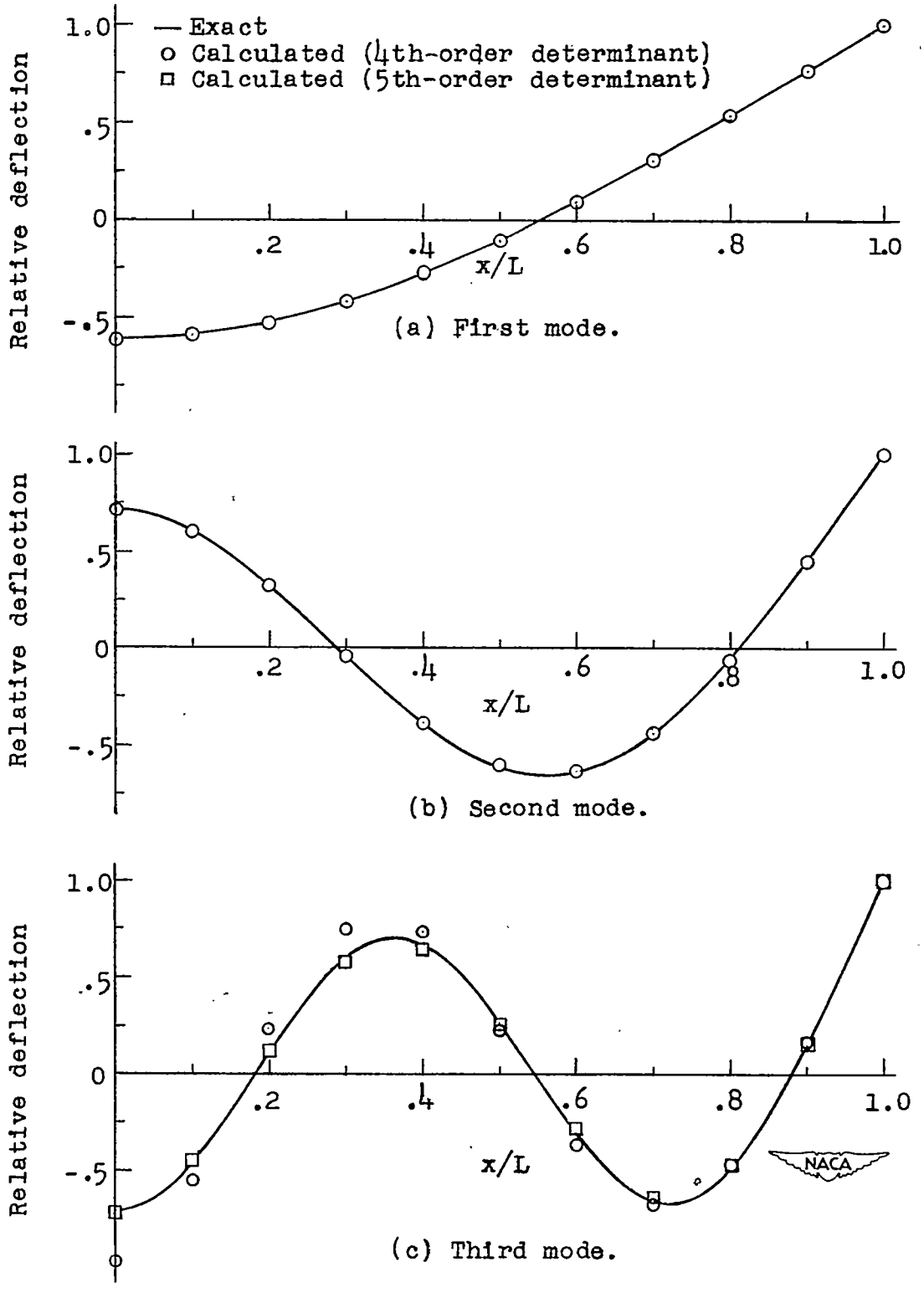

Figure 1.- Symmetrical modes of uniform free-free beam.

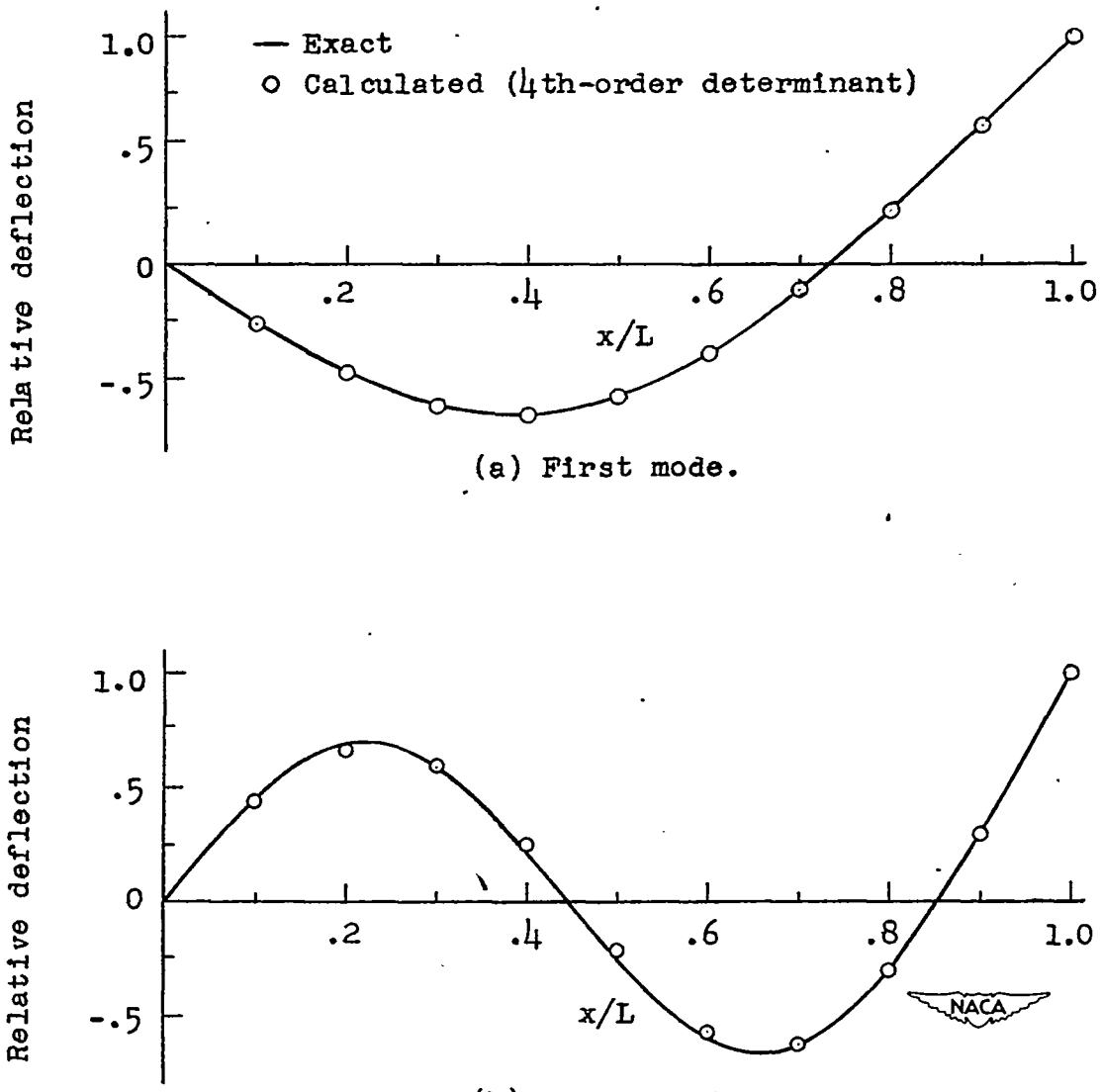

Figure 2.- Antisymmetrical modes of uniform free-free beam.

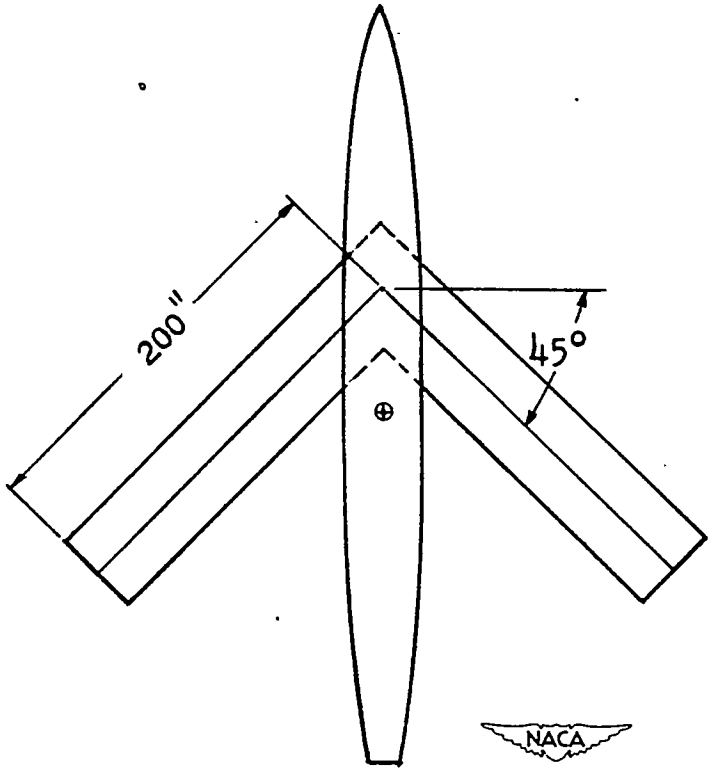

Figure 3.- Example swept-wing airplane.

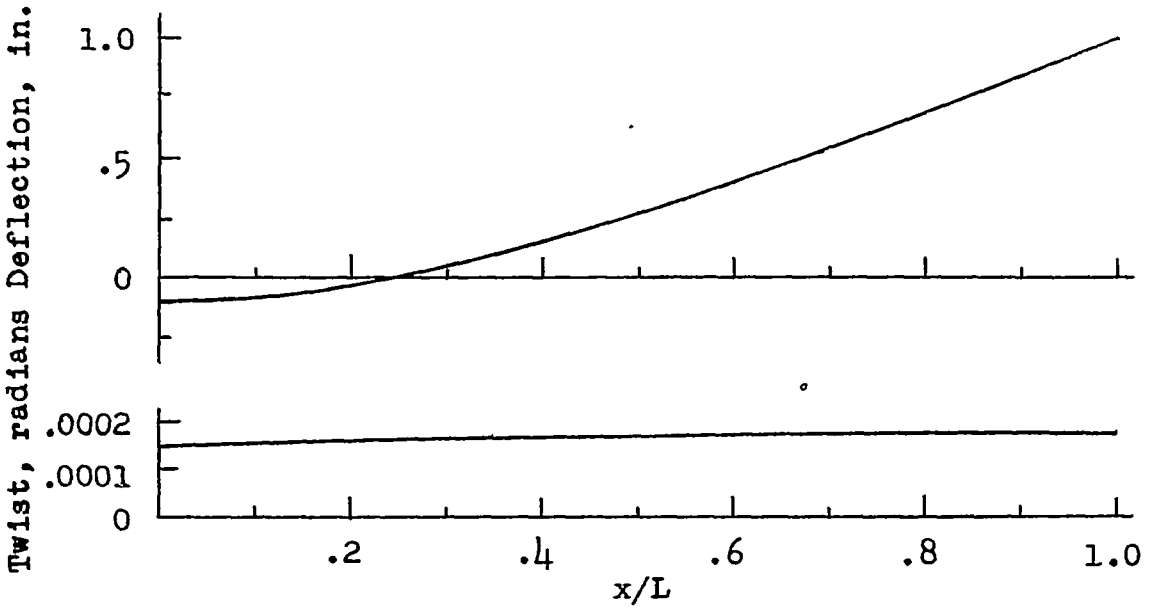

Figure 4.- First symmetrical mode of example swept wing.

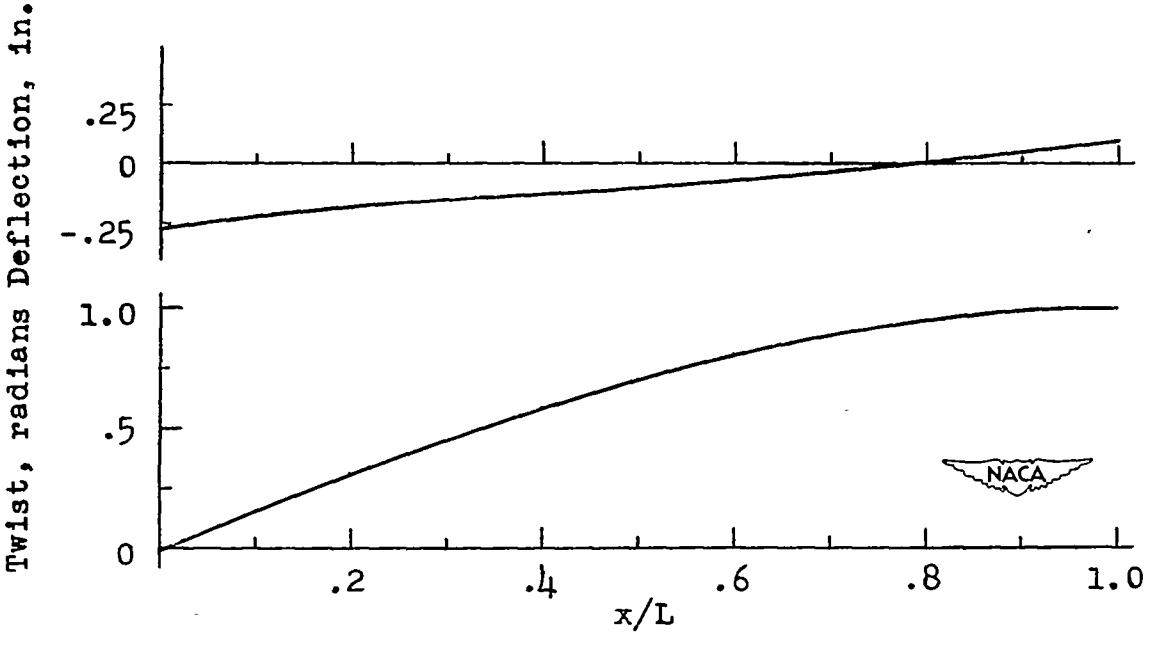

Figure 5.- Second symmetrical mode of example swept wing.

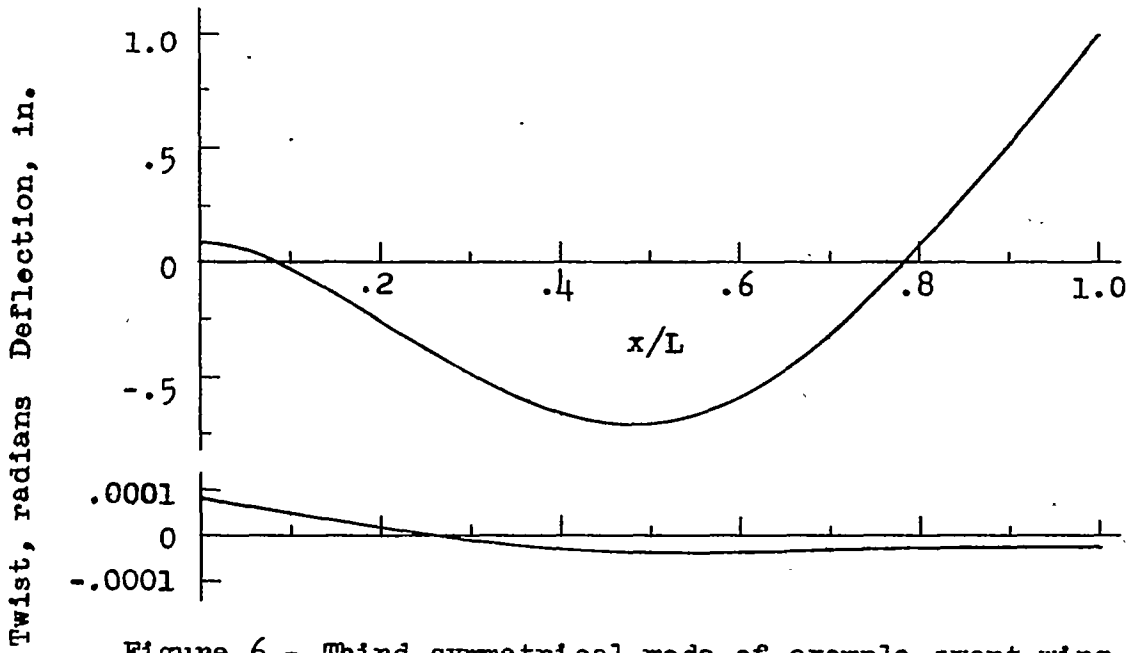

Figure 6.- Third symmetrical mode of example swept wing.

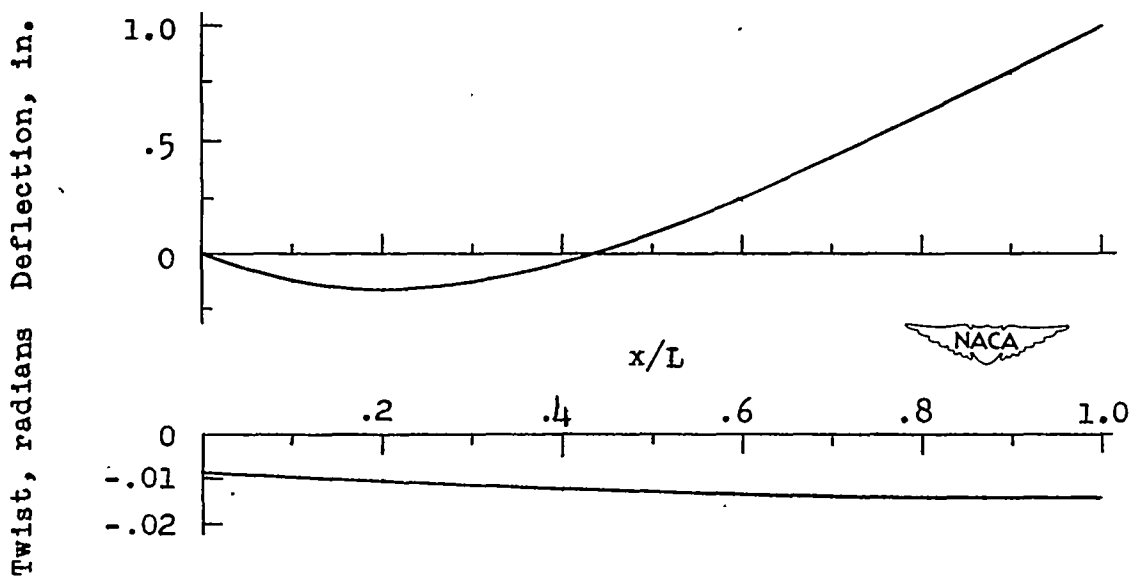

Figure 7.- First antisymmetrical mode of example swept wing.

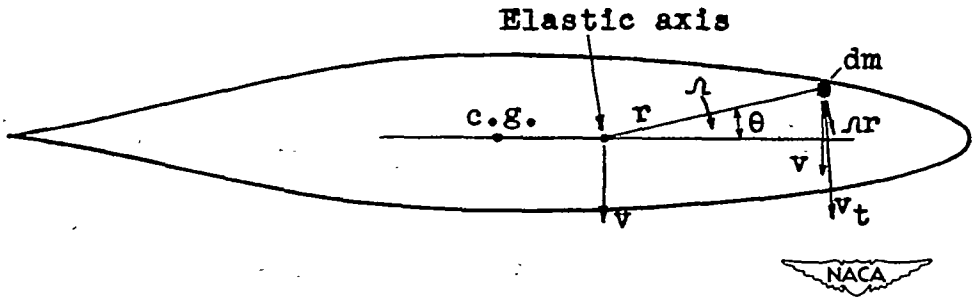

Figure 8.- Coordinate and velocity notation for element of mass on cross section.